P09561: Visible Spectrum Imaging System

Test Plans & Test Results

By: Steve Sweet, Dave Lewis, Lenny Calabrese, Joanna Dobeck, Darrell Draper, and Jason Thibado

Table of contents

1. MSD I: WKS 8-10 PRELIMINARY TEST PLAN 2

1.1. Overview 2
1.2. Subsystems Being Tested 2
1.3. Approval 3
1.4. Test Strategy 3

2. MSD II WKS 2-4: - FINAL TEST PLAN 8

2.1. Data Collection Plan; Sampling Plan 8
2.2. Measurement Capability, Equipment 8
2.3. Test Conditions, Setup Instructions 8
2.4. Test Procedure, Work Breakdown Structure, Schedule 9

3. MSD II – WKS 3-10 DESIGN TEST VERIFICATION 15

3.1. Vibration Isolation Subsystem 15
3.2. Imaging System Frame 15
3.3. Camera / Camera Link Subsystem 15
3.4. Microcontroller / Software Subsystem 16
3.5. Power Subsystem 16

P09561: Visible Spectrum Imaging System
Test Plans & Test Results

1. MSD I: WKS 8-10 PRELIMINARY TEST PLAN

1.1. Overview

1.1.1. The goal of this project is to create a visible spectrum imaging system with vibration damping and a microcontroller that can be mounted on a ground or air based vehicle and interface with the given vehicle's communication systems. The camera will be a scientific camera, as requested by our customer, the College of Imaging Science.

The primary target vehicle for the system is the P09232: UAV-Airframe B in accordance with the payload constraints of the vehicle. The end product will be modular in the sense that other imaging subsystems, microcontroller subsystem, and payload interface subsystems can be interchanged and evolve independently.

1.2. Subsystems Being Tested

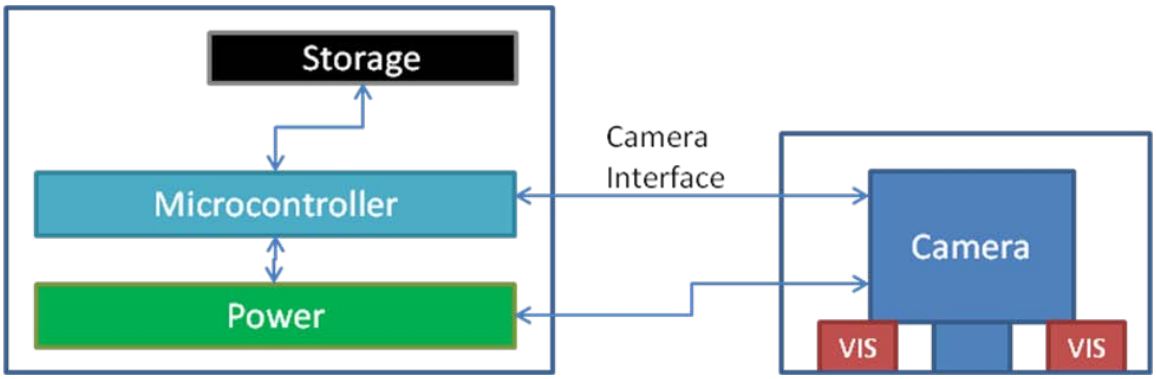

Figure 1.2-1: Block Diagram Including Major Subsytems

1.2.1. Vibration Isolation Subsystem

1.2.2. Imaging System Frame

1.2.3. Camera/ Camera Link Subsystem

1.2.4. Microcontroller/Software

1.2.5. Power Subsystem

1.3. Approval

Approved by:

Team Members – Steve Sweet, Dave Lewis, Lenny Calabrese, Joanna Dobeck, Darrell Draper, and Jason Thibado

Guide – Ray Ptucha

Customer – Carl Salvaggio, Jason Faulring

1.4. Test Strategy

1.4.1. Customer Needs

Need #	Importance	Description	Comments/Status
CN1	1	Low Cost flight time through use on UAV	1 Hour of Flight Time
CN2	2	Robust design	Survive Impact
CN3	1	Camera System Modularity (Multiple Spectrum systems)	For future projects
CN4	3	Interchangeability of components	Batteries and SD Card
CN5	1	Lightweight	Meets payload requirements of UAV B
CN6	1	Compact	Fits on UAV B
CN7	1	Clear Images	
CN8	2	Ability to map area with proper image overlap	
CN9	2	Autonomous image capture	
CN10	3	Calibration of system	Camera Calibration if possible

1.4.2. Engineering Specifications

Engr. Spec. #	Impt.	Source	Specification (description)	Unit of Measure	Marginal Value	Ideal Value
ES1	1	CN1, CN9	Data Storage	gigabyte	4	32
ES2	1	CN9	Data Transfer rate	Mb/sec	5	40
ES3	1	CN5	Weight	lbs	10	5
ES4	1	CN6	Dimensions	in	6 x 6 x 12	4 x 4 x 6
ES5	1	CN7	Reduce Vibration above Specified Frequency	Hz	50	2
ES6	1	CN3, CN4	Standard Camera Interface	# of types	1	Multiple
ES7	1	CN1, CN5, CN6	Power Requirement	Hours	1	2

1.4.3. Test Plan

Test #	Title	Description	Pass/Fail Criteria	Risk	Mitigation
Phase 1: Tested by Week 4 of MSD II					
1-1	Take Picture	Run Simple Program To Take A Picture	Camera Takes and Stores Picture	Low	Continue Development
1-2	Take Multiple Pictures	Run A Program to Automatically Take 10 Pictures	Camera Takes and Stores Multiple Picture with no extra input	Low	Continue Development
1-3	Perform Simple Test Run for Camera	Run A Program to Automatically Take Pictures for approx 1 hour	Camera Takes and Stores Picture with no extra input	Medium	Continue Development
1-4	Testing Current Output	Check requirements from PC104 and camera	Check to make sure that specs are correct for design	Medium	Continue Development
1-5	Camera Warm-Up Test	Test quality of pictures for various warm-up times	Picture quality less than ideal for lower warm-up times	Medium	Allow camera adequate time to warm-up before use
1-6	Camera Operating Temperature Test	Test camera at temperature spec extremes	Camera works at both extremes of operating temperature	Low	Camera insulation or cooling
1-7	Circuitry Testing	Make sure that PCB board works correctly and produces desired output	Correct size and specs from design. Outputs 5/12V and 300m/0.9A	Low	Make changes needed to get correct output (filtering)
Phase 2: Tested by Week 5 of MSD II					
2-1	Store Images To SD Card	Save images to SD Card instead of CF card	Images are saved to SD card	Low	Continue Development
2-2	Varying temperature picture quality	Test picture quality at varying operating temperatures	Obtain picture quality characteristic curve	Low	N/A
2-3	Batteries Discharge Rate	Testing to see how fast batteries will discharge and what are operating limits	Mainly just for documentation no real P/F	Low	Continue Development
2-4	Tensile Test of welded joint	Using tensile testing machine, find the yield and failure strength of a welded joint of aluminum bar stock.	Yield strength is compared to theoretical highest stress in part.	Medium	1. Increase Size of Bar Stock 2. Use other joint connection.

Test #	Title	Description	Pass/Fail Criteria	Risk	Mitigation
Phase 2: Tested by Week 5 of MSD II					
2-5	Bending Test of welded joint	Use three point bending test to find yield and failure strength as in 2-3	Yield strength is compared to theoretical highest stress in part.	Medium	1. Increase Size of Bar Stock 2. Use other joint connection.
Phase 3: Tested by Week 6 of MSD II					
3-1	Single Axis Vibration Test using simulated cameras of varying mass	Use simulated cameras – Vibrate system on Shaker Table in one axis. Record Displacement, Velocity and Acceleration	1. Experimental Transmissibility Plot does not exceed Theoretical Plot by more than 10% 2. Accelerations do not exceed XCL-V500 camera specifications	Medium	1. Increase shutter speed and aperture 2. Use Softer Elastomer with Increased Damping
3-2	Camera Light and Focus Test	Vary environmental parameters and take pictures with varying camera settings	Obtain curves relating camera settings to picture quality for different environmental conditions	Low	N/A
3-3	Testing Ease of Battery Implementation /Swap Out	Testing to see how easy or fast batteries can be removed and put back into module	Mainly for documentation and customer needs specifications	Low	N/A
3-4	Temperature Testing of Power System	Seeing how batteries and power reacts to higher and lower temps	Should work correctly within battery and IC temperature specifications	Medium	Continue Development
3-5	Testing of Power System	Making sure that system works correctly when implemented all together	Should power system correctly for given period of time (over 1 hour)	Low	Purchase Batteries with Higher Capacity
Phase 4: Tested by Week 7 of MSD II					
4-1	Interface PC/104 to 5V signal using polling	Set input to PC/104 to 5V, illuminate LED	LED illuminates to show that 5V signal has been detected	Medium	Set Program to Take Pictures At Specified Timing
4-2	Interface PC/104 to 5V signal using interrupts	Set input to PC/104 to 5V, illuminate LED	LED illuminates to show that 5V signal has been detected	Medium/ High	Set Program to Take Pictures At Specified Timing
4-3	Interface PC/104 to 5V signal from ground control unit	Set input from ground control to PC/104 to 5V, illuminate LED	LED illuminates to show that 5V signal has been detected	High	Set Program to Take Pictures At Specified Timing
4-4	Full Power	Test system when batteries are full	System takes and stores pictures normally	Low	

Test #	Title	Description	Pass/Fail Criteria	Risk	Mitigation
Phase 4: Tested by Week 7 of MSD II					
4-5	Low Power	Test system when battery power is low	System takes and stores pictures normally	Low	Implement power control and automatic shutdown
4-6	Environment Test	Test operation of the system in both warm and cold temperatures	System takes and stores pictures normally	Medium	Recommend that future groups implement temp. control
4-7	Power Disruption	Turn off the power to the system when running or have batteries run out	System does not corrupt. Data is retained	High	Separate system and program storage so that only program storage is lost
4-8	Camera Swap Test	Swap camera with a second camera link camera	New camera should work with minimal work required	High	Supplement existing code to allow for ease of camera swapping
4-9	Maximum Picture Frequency Test	Increase frequency of pictures until failure results	System should take pictures at a greater frequency than required for desired aerial coverage	Low	System bottleneck discovered at improved in future iterations
4-10	Frame Drop Test	Fit frame with equivalent weight of components and drop from various heights to test durability.	Frame remains intact and maintains original shape. Frame distorts or breaks.	Low	Increase thickness of material and include more support structures.
4-11	3 Axis Vibration Test using Sony XCL-V500 Camera	Focus camera on Test Pattern. Acquire Images while vibrating from 1 – 200 Hz. Perform Test in all 3 axes.	Images must be clear based upon either Jason Faulring's or Carl Salvaggio's opinion	Medium	Reduce Spring Rate by reducing Elastomer Size to reduce Displacement at Lower Frequencies (Only possible if accelerations are low enough)

1.4.4. Test Equipment available

Vibration Isolation Subsystem: Shaker Table, Frequency Generator, Power Amplifier, Accelerometers, PC with LabView software

Imaging System Frame: Tensile Testing Machine, Three Point Bending Apparatus

Camera / Camera Link Subsystem: Temperature Chamber, Alternative Camera Link Camera, Light Calibration System

Microcontroller/Software: PC running Linux, Null Modem Cable

Power Subsystem: Temperature Chamber, Multimeter

1.4.5. Test Equipment needed but not available

Vibration Isolation Subsystem: Fixture to hold VIS to the Shaker Table

Imaging System Frame: None

Camera / Camera Link Subsystem: None

Microcontroller/Software: None

Power Subsystem: None

2. MSD II WKS 2-4: - FINAL TEST PLAN

Introduction: The purpose of the following tests is to provide verification of each of the stages of development, ensuring that the path being followed will lead to a final design that meets or exceeds all of the engineering specifications. Final testing in this test plan will verify the performance of each of the subsystems and their interoperability.

2.1. Data Collection Plan; Sampling Plan

2.1.1. Test Plan

See Section 1.4.3.

2.1.2. Phases of Testing

2.1.2.1. Phases 1 and 2: Testing of Components

2.1.2.2. Phases 3 and 4: Testing of Subsystems

2.1.2.3. Phase 4: Integration Testing

2.2. Measurement Capability, Equipment

2.2.1. Test Equipment available

Vibration Isolation Subsystem: Shaker Table, Frequency Generator, Power Amplifier, Accelerometers, PC with LabView software

Imaging System Frame: Tensile Testing Machine, Three Point Bending Apparatus

Camera / Camera Link Subsystem: Temperature Chamber, Alternative Camera Link Camera, Light Calibration System

Microcontroller/Software: PC running Linux, Null Modem Cable

Power Subsystem: Temperature Chamber, Multimeter

2.2.2. Test Equipment needed but not available

Vibration Isolation Subsystem: Fixture to hold VIS to the Shaker Table

Imaging System Frame: None

Camera / Camera Link Subsystem: None

Microcontroller/Software: None

Power Subsystem: None

2.3. Test Conditions, Setup Instructions

2.3.1. Test Conditions for each test is specified by each subsystem and subsystem tester

2.4. Test Procedure, Work Breakdown Structure, Schedule

2.4.1. Vibration Isolation Subsystem

Testing to be performed by: Steve Sweet

The initial test will consist of a portion of the VIS being clamped to the shaker table found in the Mechanical Engineering Dept. Only one axis will be tested to verify the theoretical transmissibility plots calculated for the Sorbothane mounts. Verification of this data will yield great confidence to proceed with the concept as designed.

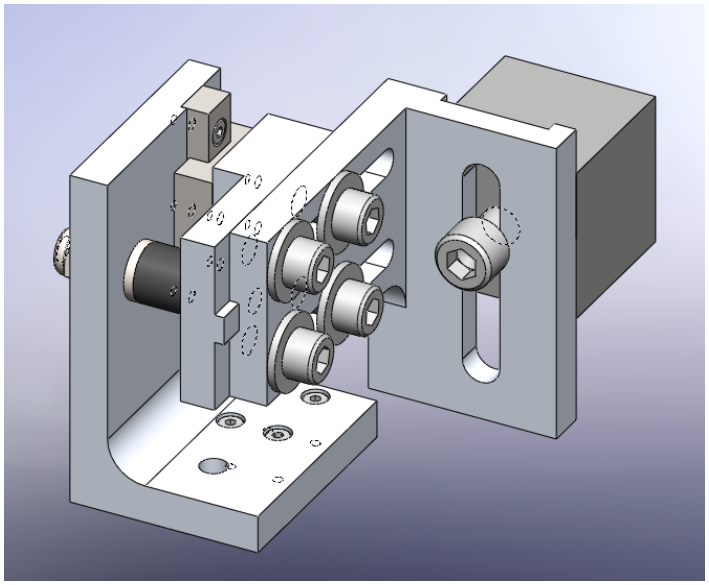

Figure 2.4.1-1: Single Axis Test Setup with Simulated Camera

The test setup will consist of parts P09561-003 – 011 and 030 [please refer to the BOM and part drawings for part number reference], as well as 3 metal blocks of varying mass to be used as simulated cameras. Part P09561-003 will be clamped to the shaker table and accelerometers will be mounted on the parts P09561-003 and the simulated cameras. The shaker table will be driven by a signal generator in a sine sweep from 1 to 200 Hz. The accelerometer data will be recorded from the base and the camera and compared to determine the transmissibility of the system. Maximum accelerations of the simulated camera will also be measured to ensure that the camera specifications will not be exceeded during normal operation.

For each of the masses, this data will be compared to the theoretical data to ensure that the actual displacement transmitted does not exceed the predicted transmission by more than 10%. Any discrepancies will be analyzed and design modifications will be made accordingly. Modifications can include, but are not limited to: vibration mount diameter changes, material changes, or a change from a shear loading to a compression loading design.

The final test will be similar to the above test, but the entire system will be mounted to the shaker table, and accelerometers will not be used. Instead, the real camera will be used, and focused on a test pattern on the ground. Pictures will be taken at 10, 30, 50, 100, and 200 Hz while the system is being vibrated. The test will be repeated for vibrations in each axis. These pictures will then be analyzed for clarity by either Carl Salvaggio or Jason Faulring.

2.4.2. Imaging System Frame

Testing to be performed by: Dave Lewis

Imaging System Frame Test Setup:

1. Welded Joint Tensile Test:

The purpose of this test is to validate or reject the use of a welded aluminum frame versus a frame constructed with common fasteners such as bolts or screws. The specimen will consist of two short lengths of aluminum welded together. This will be loaded into an axial tensile testing machine. The machine will apply load to each end of the specimen until either the welded joint or material fail. The force at which the part failed will be recorded and a yield stress will be derived from the values.

If the calculated stress is much lower than that of a joint connected with a standard fastener then the frame will not be welded.

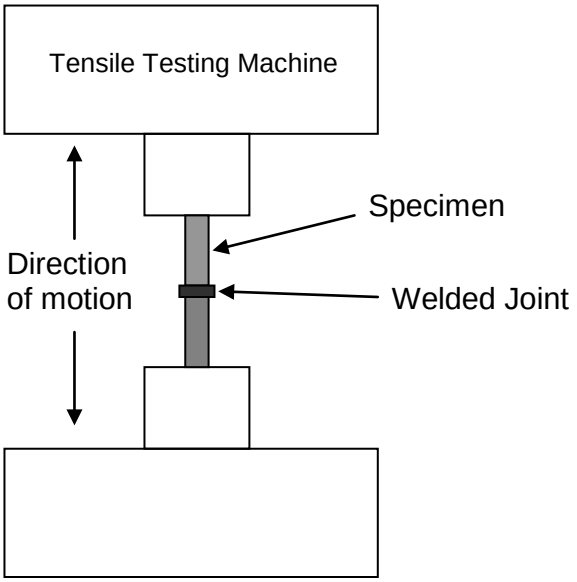

2. Bending Test:

The purpose of this test is exactly the same as the test above except that the part will be subjected to a bending load instead of a tensile load. Again a bending stress will be calculated at failure and will be compared to other values.

3. Drop Test

The purpose of the drop test is to see how the frame holds up to a shock loading when dropped from various heights. It will be recorded if the frame deforms or fails. In this case there may not be any real substance to this test considering the fact that if this frame fell to the ground from a UAV it would be from a height of around 400 feet or more. Yet, if the frame deforms from a much smaller height as would be used in this test, this is a good indication that some redesign is needed.

2.4.3. Camera / Camera Link Subsystem

Testing to be performed by: Jason Thibado

The camera sub system tests involve the testing of the operation and operation parameters of the camera itself. These tests are not inclusive of the frame grabber or the ability of the camera to take pictures under normal operating conditions. There are 5 tests planned for this sub-system:

- Camera Operating Temperature Test – week 4
- Camera Warm-Up Test – week 5
- Varying Temperature Picture Quality – week 5
- Camera Light and Focus Test – week 6
- Camera Swap Test – week 7

I. Camera Operating Temperature Test
Description: Test proper functionality of the Sony XCL-V500 camera at the camera specification temperature extremes. These extremes are listed as 23 F to 113 F.
Procedure: This will be tested by placing the camera in a temperature chamber and ensuring that the camera can take pictures at both operating extremes.
Pass Criteria: The camera works as expected at both extremes.
Mitigation: Depending on the result, either insulation or cooling may be required to allow proper functionality of the camera.

II. Camera Warm-Up Test
Description: Scientific cameras are known to require ample time to warm-up prior to use to ensure the best picture quality. This time has been estimated to be around 30 minutes.
Procedure: This will be tested by taking pictures with and without a warm-up and testing the quality of the pictures. The Imaging Science department has given us permission to use a device which quantitatively determines image quality.
Pass Criteria: The camera requires no warm-up time prior to use
Mitigation: Allow camera time to properly warm-up before flight.

III. Varying Temperature Picture Quality Test
Description: Picture quality should vary with temperature so a curve relating temperature to quality should be known.
Procedure: Pictures will be taken in the temperature chamber at varying temperatures within the operating range. The pictures will then be analyzed as in Test II, to determine the quality.
Pass Criteria: Obtain picture quality characteristic curve
Mitigation: N/A

IV. Camera Light and Focus Test
Description: This test will be used to obtain a characteristic curve relating the ambient light and camera focus to picture quality. This curve will be used to determine proper camera settings for the flight conditions.
Procedure: Pictures will be taken with varying light and focal settings. The resulting pictures will again be analyzed for quality and the best settings for different environmental parameters will be determined
Pass Criteria: Obtain picture quality characteristic curve
Mitigation: N/A

V. Camera Swap Test
Description: The Sony XCL-V500 will be replaced with another Camera Link camera available from the Imaging Science Department. This will test software modularity, as very little work should be required to hot swap cameras
Procedure: Swap a new Camera Link camera and ensure that the software functions and the camera takes pictures
Pass Criteria: New camera works with minimal work required.
Mitigation: Continue software development to allow for modularity.

2.4.4. Microcontroller/Software

Testing to be performed by: Darrell Draper and Lenny Calabrese

The focus of this testing is to ensure that the PC/104 and the software code written for the PC/104 perform as required for this project. The PC/104 is responsible for controlling the timing of taking pictures, sending the commands to the camera, and storing the images received from the camera.

The testing will be broken up into three stages; initial testing, subsystem testing, and integration testing.

Initial Testing: For the initial test to be considered successful, the PC/104 will need to request one picture from the camera and store the picture to the attached SD card. This image will be checked for quality manually.

Component Testing: For the component tests to be considered successful, the PC/104 will go through a simulated one hour flight while taking pictures. This will require several smaller tests including; testing to ensure that the imaging software can be loaded with a configuration file from the SD card, testing to ensure that the PC/104 and Framegrabber can operate fast enough, and testing to ensure the SD card is large enough to store all the images. The camera these tests will be done with will require a frame rate of 2 fps for the worst case scenario of image overlap requirements, thus 2 fps will be used for the component testing. Other cameras may require a faster frame rate so the component testing will also test the maximum frequency at which the system is able to take pictures.

Integration Testing: The integration testing will involve running the same tests as component testing only while connected to battery power instead of AC power.

2.4.5. Power Subsystem

Testing to be performed by: Joanna Dobeck

The power subsystem will be made up of two different parts – the batteries and then the buck converter circuitry to step down the voltage to the correct level for the camera and PC104. The tests performed will include the batteries and circuitry separately and also as a whole system.

There are four tests that will be completed for the components of the power subsystem:

- Current Output Test (of PC104 and Camera)
- Circuitry Testing
- Battery Discharge Rate
- Temperature testing of Power system

The following tests will be completed in conjunction with other subsystems included:

- Testing of Full Power system
- Full Power Test
- Low Power Test
- Power Disruption Test

1. Current Output Test (of PC104 and Camera) - This test will be completed to get the specific power (voltage and current) requirements for the PC104 and camera so that the power supply can be modified to provide the correct inputs from the buck converter circuitry. The procedure will be documented and all results will be recorded. Equipment used will include a digital multimeter.
2. Circuitry Testing – Testing of the circuitry will include connecting the buck converter board to a signal generator and using the digital multimeter to record the output. This test will be completed to ensure that the output is correct and matches the requirements for the system that were verified in the first test. If the output is not correct, changes will be made to the resistor values on the output of the buck converter chip and also possibly to the inductor on the output. A block diagram for the setup of this test can be seen below.

Basic Setup (for input of 22V)

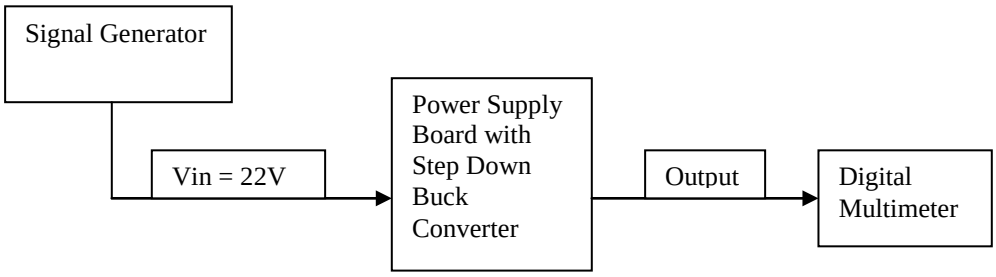

Circuit Setup – R1 and R2 can be changed if output is not correct for given input. Also L1 can be swapped for a different value.

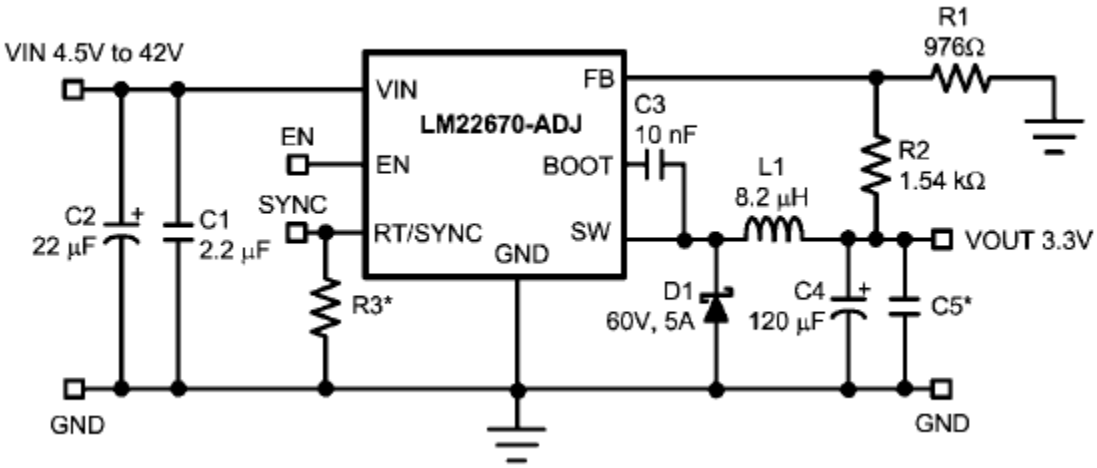

3. Battery Discharge Test – This test will be performed with help from Jason in the imaging lab. With his help it is hoped that the batteries can be drained from full capacity to see how well the batteries can be expected to perform when the system is drawing a constant current. It is unknown if the correct equipment is available to complete this test.

4. Temperature Testing of Power system – The full power subsystem with batteries and circuit boards will be placed in a temperature chamber to see how low and high temperatures affect the performance of the batteries. The customer specified that they wanted to know how well the system would work at low temperatures. Results will be documented.
5. Testing of Full Power system – The power subsystem will be attached to the PC104 and camera and tested to make sure that it delivers power correctly and works according to the design.
6. Full Power Test – In conjunction with the camera and PC104, the power subsystem will be attached with the batteries at full capacity. This test is mainly to ensure that there are no flaws in the design.
7. Low Power test – This test is similar to the Full Power test. This test is designed to see how low the battery capacity can be and still have the buck converter circuitry deliver the correct amount of current to the system.
8. Power Disruption – This test will be completed with the Microcontroller/Software group and also the camera group to ensure that if the power is disrupted the system is not corrupted by losing power unexpectedly. If a problem arises, changes will be made to the software.

3. MSD II – WKS 3-10 DESIGN TEST VERIFICATION

3.1. Vibration Isolation Subsystem

The Vibration Isolation Subsystem was unable to be tested, as the vibration testing equipment located in the Mechanical Engineering Department was rendered unusable after water leaked onto the equipment. This water damage occurred midway through the quarter, just before testing was scheduled to begin. Unfortunately, alternative equipment was unable to be located, and results of the theoretical analysis of the design will have to be relied upon to determine the success of the vibration isolation.

3.2. Imaging System Frame

Originally three tests were decided upon for the frame. As the project progressed, all three were deemed nearly unnecessary and/or it was realized that their results would be inconclusive. The first was a test of the tensile strength of a welded joint. A specimen of two aluminum sections was to be welded together and then subjected to an increasing axial load until failure. This would serve as a measure of the strength of a welded joint as opposed to the strength of a joint created using conventional fasters (i.e. bolts, screws). The same was to be done in a bending test. That is, to apply a bending load to a welded specimen until failure. Several samples of aluminum were welded together in different configurations. They were not formally tested in the procedures listed above but when firm pressure was applied by hand, the material around the welds yielded and bent extensively but the weld could not be broken. This provided confidence in welded joints as a more permanent and stable solution. Thus, bolted connections were deemed less suitable for this project and further testing deemed unnecessary.

A third test was to be a standard drop test. The final frame would be fitted with dummy masses to simulate the weight of the components and this would then be dropped from various heights to test if the frame failed or remained intact and undamaged. Any bending or breaking of the frame would be considered a failure.

Due to the nature of the use of this project, this test was also considered inconclusive. The frame is to be placed into a UAV that will have a flight altitude somewhere in the range of 400 feet. There was no conceivable way to simulate a drop from this height and a drop from even 20 feet would be of no useful comparison. Another factor to consider is the fact that the frame will be housed within the UAV and thus a majority of the energy that would come from the crash of that UAV would be absorbed by the body of the plane itself.

3.3. Camera / Camera Link Subsystem

1. Camera Operating Temperature Test: The operating range specified in the camera spec sheet is 23 – 113 °F. This test was not conducted as the Sony XCL-V500 is only a proof of concept camera and so the operating constraints associated with it will have no bearing on the operation of the final system, which will use an entirely different camera altogether.
2. Camera Warm-Up Test: Scientific cameras generally have a start up time, after which the ideal picture quality is obtained. Since this property is specific to individual cameras, this test was not completed for the same reasons as the temperature test.
3. Varying Temperature Picture Quality Test: Like the warm-up test, this will be specific to whatever camera is selected for the final project, and thus was not performed.
4. Camera Light and Focus Test: This test was meant to determine a characteristic curve, relating picture quality to the iris setting and focus of the camera. Since these settings are specific not only to individual cameras but also to the operating environment, this test was not performed. Qualitatively determining picture quality was also beyond the scope of our capabilities.

5. Camera Swap Test: This test aimed at proving the modularity of the system by allowing another camera to be plugged in with no software changes and have full functionality. This test was not performed since no camera was readily accessible for hot-swapping. Despite this, given the fact that the XCL-V500 works by supplying the camera file, so too should other cameras given their camera file.

3.4. Microcontroller / Software Subsystem

Initial Testing: The initial testing phase was completed successfully; the image was stored on the SD card with acceptable quality.

Component Testing: All tests done for the component testing phase were completed satisfactorily. The system took and stored 7200 hundred images while running for an hour. This reflects success in all tests for this phase, as the system was able to acquire images at 2 fps for 1 hour. The second portion of testing done for this phase was to find the maximum frame rate for the system. With this camera, the system is capable of taking pictures at 5 fps.

Integration Testing: Integration tests were successful. The entire system completed a one hour simulation, acquiring images at 2 fps, while running on battery power.

3.5. Power Subsystem

1. Voltage Output Test: This test was slightly modified to only test the voltage requirements for the PC/104 and the SD card reader. This was done because the camera only had two inputs (12V and ground) while the PC/104 had a 10 pin input and the SD card reader had a 4 pin input. It was found that the SD card reader would need power, which was not included in the initial design. The batteries and power system were able to power both boards because in the design there was room for additional current draw if needed. Below is a table that shows the pin outs for the PC/104. Pins 4, 6 and 7 were not needed for this project and were left unconnected

J8 Pin	Signal Name
1	Ground
2	+5VDC
3	Ground
4	+12VDC
5	Ground
6	-12VDC
7	+3.3VDC
8	+5VDC
9	Ground
10	+5VDC

Table 3.5-1: PC/104 Pin Connections

The following table is for the SD card reader. Pins 1 and 2 were not used and left unconnected.

Pin	Signal Name
1	Not connected
2	Not connected
3	Ground
4	+5VDC

Table 3.5-2: SD Card Reader Pin Connections

2. Circuitry Testing: For this testing the buck converter board was connected to a power supply and 15 or 22V was applied (depending on each system). The output was then found. The boards were originally designed to have a standard 3.3V output and so the resistor at R1 had to be changed to allow for a 5V or 12V output instead. In the following table are values for input, output and resistors taken initially.

V_{in} (V)	R1 (Ω)	V_{out} (V)	VFB (V)	R2 (Ω)
15	976	3.3	1.293	1540
22	976	3.3	1.293	1540

Table 3.5-3: Buck Converter Voltages as Supplied

From these results and using the following equation a value for the resistor at R1 was found. The equation used is shown as well as the calculated resistor values.

$$R1 = \frac{VFB * R2}{Vout - VFB}$$

Equation 3.5-1: Resistor Value Calculation for Desired Voltages

V_{out} (V)	R1 calculated (Ω)
12V	185.208
5V	537.151

Table 3.5-4: Required Resistor Values

Standard resistor values could only be ordered (see table below) and so the values were approximated to allow for an output voltage slightly greater than required.

V_{in} (V)	R1 (Ω)	V_{out} (V)	I_{in} (A)	I_{out} (A)	V_{FB} (V)	R2 (Ω)
22	180	12.35	0.3	1.0	1.29	1540
15	510	5.163	0.1	0.3	1.29	1540

Table 3.5-5: Summary of Buck Converter Design Values

3. Testing of Full Power system: The system was run on battery power from full charge. The system was booted and took continuous images for 2 hours and 10 minutes. This is well above the engineering specification of 1 hour.
4. Power Disruption Test: The batteries were allowed to drain completely. No issues were encountered with the microcontroller or related hardware. The last 20 seconds of images were unusable, but no other issues arose. The system worked perfectly fine upon reboot.

The following tests were not completed in this phase of Senior Design due to time constraints and unavailability of a temperature chamber:

- Battery Discharge Test
- Temperature Testing of Power System
- Full Power Test (test similar to Full system test)
- Low Power Test