SCOPE OF WORK

PROJECT IDENTIFICATION

PROJECT NAME:	MCCCD
PROJECT:	PCC – Civic Center (PC Downtown)
SITE ADDRESS:	640 N. 1st Ave
	Phoenix AZ 85003
	City State ZIP Code

SCOPE OF WORK

SUMMARY:

Roof Section #1

1. Tear off the existing BUR roof system down to the metal decking.
2. Remove all copings and discard
3. Remove all wall counter flashings and discard.
4. Raise all penetrations, protrusions, curbs to a minimum 8” above the finished roof surface.
5. Replace existing roof vents with new box vents that are 8” above the finished roof surface.
6. Electrical penetrations to be set and fastened per code requirements.
7. Install two layers of 1.5” polyisocyanurate and fastened with screws and plates per wind uplift requirements to meet I-90 rating. Adhere 5/8” fibered gypsum cover board cover.
8. Crickets leading to the drains to be built at a 2: 1 length to width ratio.
9. Crickets shall be built on the high side of curbs that are greater than 24” in width. Crickets shall be built at a 1:1 length to width ratio.
10. Adhere a high density coated cover board to the walls, terminating flush with parapet wood nailer.
11. Install a SBS self-adhered membrane, continuous cleat, and 24 gauge perimeter drip edge around the entire parapet wall.
12. Install two ply self-adhered SBS membrane and coatings to achieve 26 mils DFT.
13. Base flashings to be fastened with termination bar at all vertical surfaces.
14. Membrane to be installed up and over parapet walls and terminated at perimeter edge.
15. Skylight frames to be removed and compressible sealant installed, and frames reinstalled.

SCOPE OF WORK

Roof Section #3

1. Remove tiles and set to the side for reinstall.
2. Remove gutter and set to the side for reinstall.
3. Tear off all underlayments and flashings down to wood decking.
4. Install a self-adhered SBS underlayment at eave edge that is terminated behind gutter and turns up slope a minimum 12”. Reinstall gutter.
5. Install a modified 40 lb. ASTM modified underlayment to replace existing. Fasten underlayment with metal cap nails.
6. Modified self-adhered underlayment shall be installed around the perimeter of the roof and shall turn down rake edges a minimum 1” and turn up verticals 4”. Self-adhered membrane shall have a minimum width of 12”.
7. Replace parapet wall flashing with new 24 gauge wall flashing with counter flashing for the flat roof detail.
8. Install pre-manufactured weather blocking at head wall flashing.
9. Reinstall tile. Fasten each tile and replace damaged tile with like size, type and color scheme.

Photo # 1

Description: Building Identification

Photo # 2

Description: View of roof section #1 facing East. Roof section to be torn off down to the wood sheathing. Fasten 2 layers of 1-1/2” polyisocyanurate insulation board, Adhere 5/8” fibered gypsum cover board and a two ply self-adhered SBS roof system with 26 mils DFT.

Photo # 3

Description: Roof 1 – Roof consists of a 4 plies asphalt BUR over wood sheathing.

Photo # 4

Description: Roof 1 – All condensing units shall be lifted and set on top of premanufactured supports that are in the same direction of water flow. No wood permitted.

Photo # 5

Description: Roof 1 – All condensing units shall be lifted and set on top of premanufactured supports that are in the same direction of water flow. No wood permitted.

Photo # 6

Description: Roof 1 – Mechanical HVAC units shall be raised a minimum 8” above the finished roof surface and set on top of proper size curbs. No wood permitted.

Photo # 7

Description: Roof 1 – Copings to be removed and discarded. Adhere a ¼” high density coated cover board to vertical walls, terminating with wood nailer.

Photo # 8

Description: Roof 1 – All crickets leading to the drain points shall be built to a 2:1 length to width ratio. Crickets shall be constructed out of board stock.

Photo # 9

Description: Replace low roof vents with new box vents that are 8” above the finished roof surface and has 4” flange on all sides. All penetrations, protrusions, curbs to be raised to meet the 8” height requirements.

Photo # 10

Description: Roof 1 – Electrical junction boxes to be set per code requirements. Multi-lines shall be installed in a hooded jack detail.

Photo # 11

Description: Roof 1 – Skylight frames to be removed and compressible sealant installed, and frames reinstalled.

Photo # 12

Description: Roof 1 – Membrane to be installed up and over parapet walls, terminated at exterior edge wither perimeter flashing.

Photo # 13

Description: Roof 1 – All wood blocking and horizontal Uni-strut to be replaced with premanufactured made supports.

Photo # 14

Description: Roof 1 – Typical condition of penetrations to be sealed with liquid flashing.

Photo # 15

Description: Roof 3 – Roof section facing South. Tiles to be set to the side and reinstalled.

Photo # 16

Description: Roof 3 – Existing underlayment to be removed down to the wood sheathing. Install a 40 lb. modified underlayment. Underlayment to be fastened with metal cap nails.

Photo # 17

Description: Roof 3 – Remove gutter. Install a self-adhered SBS underlayment at eave edge that is terminated behind gutter and up slope 12”, reinstall gutter.

Photo # 18

Description: Roof 3 – Self adhered underlayment shall be terminated vertically 4”. Install manufactured weather blocking at head wall locations.

Photo # 19

Description: Roof 3 – Existing head wall flashing to be replaced with new flashing that counter flashes the flat roof verticals 4”. Self-adhered membrane shall have a minimum width of 12”.

SECTION 075219 - SELF-ADHERING MODIFIED BITUMINOUS MEMBRANE ROOFING

PART 1 - GENERAL

1.1 RELATED DOCUMENTS

A. Drawings and general provisions of the Contract, including General and Supplementary Conditions and Division 01 Specification Sections, apply to this Section.

1.2 SUMMARY

A. This Section includes the following:

1. Bid will consist of the following system application:
   a. Cover board.
   b. One layer self-adhered base sheets.
   c. One layer coated self-adhered granulated membrane.

1.3 DEFINITIONS

A. Roofing Terminology: Definitions in ASTM D 1079 and glossary in NRCA's "The NRCA Roofing and Waterproofing Manual" apply to work of this Section.

1.4 PERFORMANCE REQUIREMENTS

A. Install substrate boards, insulation with tapered crickets, cover boards and self-adhering modified bituminous membrane roofing and flashing system with compatible components that will not permit passage of liquid and will withstand wind loads, flotation loads, thermally induced movement, and exposure to weather without failure.

1.5 SUBMITTALS

A. Product Data: For each type of roofing product used within the system.

B. Shop Drawings: For roofing system. Include plans, elevations, sections, details, and attachments to other work, including:

1. Construction details.
2. Base flashings and membrane terminations.
3. Insulation fastening patterns for corner, perimeter, and field-of-roof locations.

C. Fastening pattern layout for insulation / taper system that meet local wind up-lift ratings. (adhesive pattern)

D. Installer Certificates: Signed by manufacturers certifying that installers comply with manufacturer’s requirements.

E. Qualification Data: For Installer and manufacturer.

F. Manufacturer Letter: Signed by roofing manufacturer certifying that roofing system complies with requirements specified.

G. Inspection Report for Information: Copy of roofing system manufacturer's inspection report of completed roofing membrane.

H. MSDS: For each product being used in the roofing system. (Owner Only)

I. Warranty: Sample warranty in compliance with specification. (Manufacturer & Contractor)

1.6 QUALITY ASSURANCE

A. Installer Qualifications: An employer of workers trained and approved by manufacturer, with a minimum of 10-years experience as a licensed contractor in the State of Arizona.

1. Manufacturer must provide a minimum of 4-hours certification class for each of the contractor's employees that will be working on the project, prior to commencement of the project.
2. No personnel will be allowed to work on the project without the certification identification from the manufacturer.
3. Roofing contractor's qualified employees must carry a photo ID card with the certification from the manufacturer on the backside of the photo ID.

B. Manufacturer Qualifications: Manufacturer must provide a minimum 4-hour accreditation program that is based on the manufacturer / industry published guidelines for adhered single ply roofing system. Manufacturer will provide certificates of completion along with photo ID cards with the name of the person passing the course along with the contractor's name, and date of completion.

C. Source Limitations: Obtain roofing system materials through one source from a single manufacturer.

D. All construction details shall be in accordance with the NRCA, Manufacturer, and SMACNA construction details as they apply to single ply roof systems, and be approved by the manufacturer prior to application.

E. Pre-installation Conference: Conduct conference at Project site to comply with requirements in Division 01 Section "Project Management and Coordination." Review methods and procedures related to roofing system including, but not limited to, the following:

1. Review structural load limitations of roof deck during and after roofing.
2. Review flashing, special roofing details, roof drainage, roof penetrations, equipment curbs, and condition of other construction that will affect roofing.
3. Review regulations and requirements of authorities having jurisdiction for insurance, certifications, and inspection and testing, if applicable.
4. Review temporary protection requirements for roofing system during and after installation.
5. Review roof observation and repair procedures after roofing installation.

1.7 DELIVERY, STORAGE, AND HANDLING

A. Deliver materials to Project site in original containers with seals unbroken, labeled with manufacturer's name, product brand name and type, date of manufacture, and directions for storing and mixing with other components.

1. Handle and store roofing materials and place equipment in a manner to avoid significant or permanent damage to deck or structural supporting members.

B. Protect roofing materials from damage and from deterioration by sunlight, moisture, soiling, and other sources. Store in a dry cool location.

C. Handle and store roofing materials, and place equipment in a manner to avoid permanent deflection of deck.

1.8 PROJECT CONDITIONS

A. Environmental Limitations: Apply roofing within the range of ambient and substrate temperatures recommended by roofing system manufacturer. Do not apply roofing to a damp or wet substrate.

1. Do not apply roofing in snow, rain, fog, mist or when conditions are within 5°F of dew point.

1.9 WARRANTY

Special Warranty: Manufacturer agrees to repair or replace components of roofing system that fail in materials or workmanship within specified warranty period. Special warranty includes roofing, base flashings, roof insulation, fasteners, cover boards, roofing accessories, and other components of roofing system.

1. Perform as manufactured and installed.
2. Remain watertight.
3. Remain free of manufacturer or installation defects.

B. Warranty Period: 20-years from date of Substantial Completion.

C. Coating System Warranty: Coating manufacturer agrees to repair or replace coating system that does not comply with the following requirements.

1. Perform as manufactured and installed.
2. Remain free of manufacturer or installation defects.
3. Coating shall not blister, scale, peel or crack.

D. Warranty Period: 20 years from date of Substantial Completion.

E. Contractor’s warranty will provide for all content as required by the Arizona Registrar of Contractors.

1. Provide 5 year warranty.

PART 2 - PRODUCTS

2.1 MANUFACTURERS

A. Manufacturers: Subject to compliance with requirements, provide products by the following:

B. Basis-of-Design Product: Subject to compliance with requirements, provide or comparable product by one of the following:

1. Insulation and cover board products: Subject to compliance with requirements, provide one of the following
   a. Johns Manville
   b. Polyglass

c. Soprema
d. Or equal

2. Roof Membrane Products: Subject to compliance with the requirements, provide one of the following:
   a. Johns Manville
   b. Polyglass
   c. Soprema
   d. Or equal

2.2 ROOFING MEMBRANE

A. Base Ply Membrane: Self-Adhering SBS Modified Bituminous Roofing Membrane with fiberglass reinforcement. (2 layers)

1. Acceptable Products;
   a. Johns Manville – CleanBond SBS Base Sheet
   b. Polyglass – Elastoflex SA V
   c. Sopreman – Elastophene Sure-stick

B. Surface Membrane: Self-adhering granulated, fiberglass or polyester reinforced, SBS modified bitumen membrane.
1. Johns Manville – Clean Bond SBS Capsheet
2. Polyglass – Elastoflex SA P
3. Soprema Elastophene Sure-stick FR GR

C. Base Flashings – Parapet Walls: Self-adhering SBS modified bitumen membrane.

1. Acceptable Products

   a. Johns Manville – CleanBond Utility Sheet/CleanBond SBS Cap over CleanBond Polyester Base Flashing.
   b. Polyglass – Elastoflex SA P over Elastoflex SA V
   c. Soprema –Elastophene Sure-stick FR GR over Elastophene Sure-stick

D. Base Flashings – Non Parapet Walls:

1. Acceptable Products
   a. Johns Manville – CleanBond Polyester Cap Flashing over CleanBond Polyester Base Flashing.
   b. Polyglass – Elastoflex SA P over Elastoflex SA V
   c. Soprema – Elastophene Sure-stick FR GR over Elastophene Sure-stick

2.3 COVER BOARD

A. High density board with coated facer.
1. Securock Gypsum Fibered Roof Board
2. Or equal

B. Thickness: 5/8 inch maximum.

2.4 COATINGS

A. Energy Star certified white acrylic roof coating.

B. Approved manufacturers:
   1. Johns Manville – TopGard 4000
   2. Polyglass – PG 700
   3. Soprema – Alsan coating AC 401
   4. Or equal

C. Coating minimum requirements: ASTM D 6083

   a. Emissivity – 90%
   b. Reflectivity – 80%
   c. Solids by Volume – 55% +/- 5%
   d. Minimum Thickness – 26 mils DFT

2.5 AUXILIARY MATERIALS

A. General: Furnish auxiliary materials recommended by roofing system manufacturer for intended use and compatible with roofing.

   1. Furnish liquid-type auxiliary materials that meet VOC limits of authorities having jurisdiction.

B. Mastic and Sealant: SBS mastic and sealant recommended by manufacturer.

C. Adhesives: Two part low rise foam insulation adhesive designed to adhere insulation using the manufacturers recommended application rates.

D. Metal Termination Bars: Manufacturer's standard predrilled stainless steel or aluminum termination bars, approximately 1 by 1/8 inch thick, with anchors.

E. Flashings: 24 gauge minimum. Perimeter, curb and wall flashings (type SM).

F. Liquid Flashings: One of two part urethane bituminous flashing system with polyester fabric.

G. Fabric Mat: Stitchbond polyester fabric mat; of type and weight recommended by roofing manufacturer for application.

H. Pre-manufactured Pipe Stands; Designed specifically for pipes and conduits.

   1. Dura-Blok
   2. Miro
   3. PHP

PART 3 - EXECUTION

3.1 GRAVEL REMOVAL AND EXAMINATION

A. Examine substrates, areas, and conditions under which coated foamed roofing will be applied, with Installer present, for compliance with requirements.

   1. All roof decks must be properly sloped to provide for positive drainage.

2. All pipes, curbs and penetrations shall be extended to allow for a minimum base flashing height of 8-inches above the finished foam roof surface.
3. Verify that roof openings and penetrations are in place, curbs are set and braced, and roof-drain bodies are securely clamped in
4. Verify that wood blocking, curbs, and nailers are securely anchored to roof deck at penetrations and terminations and that nailers match thicknesses of insulation.
5. Verify that surface plane flatness and fastening of metal roof deck complies with requirements.

B. Proceed with installation only after unsatisfactory conditions have been corrected and substrates are dry.

3.2 PREPARATION

A. Tear off existing BUR system down to decking. Any substrate that is structurally unsound shall be identified and repaired or replaced by the appropriate contractor prior to installation of roofing system.

B. Protect roof drains and other deck penetrations to prevent spillage and migration of roofing fluids.

C. Remove fins, ridges, mortar, and other projections and fill honeycomb, aggregate pockets, holes, and other voids.

D. Prepare, treat, and seal vertical and horizontal surfaces at terminations and penetrations through roofing and at drains and protrusions.

E. All vertical surfaces must be primed prior to application of the roof system.

3.3 ROOFING INSTALLATION, GENERAL

A. Install roofing system according to roofing system manufacturer's written instructions.

B. Complete terminations and base flashings and provide temporary seals to prevent water from entering completed sections of roofing system at the end of the workday or when rain is forecast. Remove and discard temporary seals before beginning work on adjoining roofing.

C. Install roofing and auxiliary materials to tie in to existing roofing to maintain weather tightness of transition and to not void warranty for existing roofing system.

3.4 COVERBOARD INSTALLATION

A. Cover board shall be off set and staggered over joints of previously laid insulation boards by a minimum 12 inches in each direction. Fastened with 2 part adhesives.

3.5 SELF ADHERED MEMBRANE INSTALLATION

A. Install roofing membrane according to roofing membrane manufacturer's written instructions.

B. Install self-adhering modified bituminous membrane roofing.

1. When ambient and substrate temperatures are 40 degrees F and rising or greater as required by the manufacturer.

C. Base Application: Apply the base sheets to the cover board. The base sheets is to be applied in shingle fashion and set as so the laps do not line up with the laps of the granulated membrane. Maintain uniform 6-inch- wide end laps. Overlap and roll seams and stagger end laps.

D. Granulated Membrane: Apply membrane from low point to high point of roof deck to ensure that side laps shed water.

E. Repair tears, voids, and lapped seams in roofing not complying with requirements. Slit and flatten fishmouths and blisters. Patch with roofing membrane extending 6 inches beyond repaired areas in all directions.

F. Correct deficiencies in or remove roofing membrane that does not comply with requirements, repair substrates, reapply roofing membrane, and repair flashing sheets.

G. There shall be no exposed asphalt based mastics on membrane that is to be coated.

3.6 FLASHING INSTALLATION

A. Install base flashing membrane and extend up walls or parapets a minimum of 8 inches above insulation.

B. Install termination bars and mechanically fasten to top of all base flashings at terminations, curbs, parapets and perimeter of roofing. Seal top of flashing with SBS modified mastic or approved sealant. Counter flash with 2 piece metal flashings or liquid flashing as described by designer.

C. All roof pipe, equipment and curb penetrations shall be a minimum 8 inches above the finished roof and shall be flashed with lead and or 2 part urethane flashing materials. All horizontal pipes and conduits are to be set and secured a minimum 12” from base flashings and walls.

D. There shall be no exposed asphalt based mastics on membrane that is to be coated.

E. Where Hypalon is being reused, set Hypalon in adhesive.

3.7 COATING APPLICATION

A. Base bid: Coatings are to be applied at a rate to achieve a final dry film thickness (DFT).

1. Primer coat may be required by manufacturer and can be included in the 26 mils DFT minimum requirement.
2. First coat is to be applied at a rate to achieve a minimum 13 mils DFT. The first coat is to be sprayed **and back rolled** into the granule surface.
3. The second coat is to be sprayed applied perpendicular to first application, at a rate to achieve a minimum 13 mils DFT.
4. Total coating thickness shall be minimum 26 mils DFT as measured with an optical comparator.

3.8 FIELD QUALITY CONTROL

A. Authorized representative of the owner – will perform quality assurance monitoring and testing of samples from the roof on the project as authorized by the owner.

B. Authorized technical representative of the manufacturer supplying roofing system shall perform in-progress inspections.

1. Minimum one in progress inspection per roof section.

C. Final Roof Inspection: Arrange for roofing system manufacturer's technical personnel to inspect roofing installation on completion of roofing membrane and flashing.

1. Notify consultant and Owner 48 hours in advance of date and time of inspection.
2. Manufacturer’s personnel shall provide inspection report on any deficiencies or variations.

D. Contractor shall repair all test areas and correct deficiencies in or remove roofing that does not comply with requirements, repair substrates, reapply roofing, and repair flashing. All test areas and deficiency corrections shall be made by the contractor at no additional cost to owner.

3.9 PROTECTING AND CLEANING

A. Protect roofing according to manufacturers written recommendations to prevent damage and wear during application and remainder of construction period.

B. Protect installed insulation from damage due to UV-light exposure, physical abuse, and other causes. Provide temporary coverings where insulation will be subject to abuse and cannot be concealed and protected by permanent construction immediately after installation.

C. Clean spillage and soiling from adjacent construction using cleaning agents and procedures recommended by manufacturer of affected construction.

END OF SECTION 075219

SECTION 073213 - CLAY ROOF TILES

PART 1 - GENERAL

1.1 RELATED DOCUMENTS

A. Drawings and general provisions of the Contract, including General and Supplementary Conditions, apply to this Section.

1.2 SUMMARY

A. Section Includes:

1. Clay roof tiles.
2. Underlayment.

1.3 DEFINITIONS

A. Roofing Terminology: See ASTM D 1079, glossaries in TRI/WSRCA's "Concrete and Clay Roof Tile Design Criteria Installation Manual for Moderate Climate Regions," and NRCA's "The NRCA Roofing and Waterproofing Manual" for definitions of terms related to roofing work in this Section.

1.4 SUBMITTALS

A. Product Data: For each type of product indicated.

B. Samples for Initial Selection: For each type of concrete roof tile and accessory tile indicated.

1. Include similar Samples of trim and accessories involving color selection.

C. Warranties: Sample of special warranties.

1.5 QUALITY ASSURANCE

A. Source Limitations: Obtain concrete roof tiles and accessory tiles from single source from single manufacturer.

B. Pre-installation Conference: Conduct conference at Project site.

1.6 DELIVERY, STORAGE, AND HANDLING

A. Store underlayment rolls on end, on pallets or other raised surfaces. Do not double stack rolls.

1. Handle, store, and place roofing materials in a manner to avoid significant or permanent damage to roof deck or structural supporting members.

B. Protect unused underlayment from weather, sunlight, and moisture when left overnight or when roofing work is not in progress.

1.7 PROJECT CONDITIONS

A. Weather Limitations: Proceed with installation only when existing and forecasted weather conditions permit roofing to be performed according to manufacturer's written instructions and warranty requirements.

1. Install self-adhering sheet underlayment within the range of ambient and substrate temperatures recommended by manufacturer.

1.8 WARRANTY

A. Contractor Warranty: Standard form in which the contractor agrees to repair or replace clay roof tiles that were not installed per written industry standard or as required by design. Contractor agrees to repair all roof system related leaks.

1. Contractor Warranty Period: 5 years from date of Substantial Completion

PART 2 - PRODUCTS

2.1 CLAY ROOF TILES

A. Clay Roof Tiles: Roof tile units of shape and configuration to match existing, with integral color, and free of surface imperfections. Provide with fastening holes pre-punched at factory or drilled by contractor.

1. Weight: Normal.
2. S-tile Shape:

2.2 ACCESSORIES

A. Mortar: ASTM C 270, Type M, with ASTM C 979, pigmented mortar matching the color of concrete roof tiles for exposed-to-view mortar, and natural color for concealed-from-view mortar.

B. Mastic: SBS rubberized modified flashing cement meeting ASTM D 4586.

2.3 FASTENERS

A. Roofing Nails: ASTM F 1667, hot-dip galvanized-steel, 0.1055-inch- diameter shank, sharp-pointed, conventional roofing nails with barbed shanks; minimum 3/8-inch- diameter head; of sufficient length to penetrate 3/4 inch into wood.

1. Where nails are in contact with metal flashing, use nails made from same metal as flashing.

B. Underlayment Nails: 1” round cap nails with ringed shank.

2.4 UNDERLAYMENT MATERIALS

A. Modified Sheet Underlayment: ASTM D 4601-98, minimum of 40 lbs. SBS. Provide primer for adjoining concrete or masonry surfaces to receive underlayment.

1. Manufacturers: Subject to compliance with requirements, provide products by one of the following:

a. Fontana
b. Polyglass.
c. Tamko
d. Or equal

2.5 METAL FLASHING AND TRIM

A. General: Install metal flashings and other sheet metal to comply with requirements.

1. Sheet Metal: Galvanized metal.

B. Fabricate sheet metal flashing and trim to comply with recommendations that apply to design, dimensions, metal, and other characteristics of the item in SMACNA's "Architectural Sheet Metal Manual."

1. Apron Flashings: Fabricate with lower flange extending a minimum of 6 inches over and 4 inches beyond each side of downslope tile roofing and 6 inches up the vertical surface.
2. Channel Flashings: Fabricate with vertical surface extending a minimum of 4 inches above the concrete roof tile and 6 inches beneath the tile roofing, with a 1-inch- high vertical return to form a runoff channel.
3. Cricket / Backer Flashings: Fabricate with concealed flange extending a minimum of 18 inches beneath upslope tile roofing, 6 inches beyond each side of chimney, skylight, and 6 inches above the roof plane.
4. Open-Valley Flashings: Fabricate in lengths not exceeding 10 feet, with 1-inch- high, inverted-V profile at center of valley and with equal flange widths of 12 inches.
5. Drip Edges: Fabricate in lengths not exceeding 10 feet, with 2-inch roof-deck flange and 2-inch fascia flange with 3/8-inch drip at lower edge.

C. Vent-Pipe Flashings: ASTM B 749, Type L51121, at least 4 lb. Provide lead sleeve sized to slip over and turn down into pipe, soldered to skirt at slope of roof and extending at least 4 inches from pipe onto roof.

PART 3 - EXECUTION

3.1 EXAMINATION

A. Examine substrates, areas, and conditions, with Installer present, for compliance with requirements for installation tolerances and other conditions affecting performance of the Work.

1. Examine roof sheathing to verify that sheathing joints are supported by framing and blocking or metal clips and that installation is within flatness tolerances.
2. Verify that substrate is sound, dry, smooth, clean, sloped for drainage, and completely anchored and that provision has been made for flashings and penetrations through roofing.

B. Prepare written report, endorsed by Installer, listing conditions detrimental to performance of the Work.

C. Proceed with installation only after unsatisfactory conditions have been corrected.

D. Dispose of all roofing debris meeting local municipality requirements.

3.2 UNDERLAYMENT INSTALLATION

A. General: Comply with concrete roof tile manufacturer's written instructions and recommendations in NRCA's "The NRCA Roofing and Waterproofing Manual."

1. Cover ridge and hip wood nailers with underlayment strips.

B. Underlayment: Install per manufacturer’s installation requirement, wrinkle free; comply with low-temperature installation restrictions of underlayment manufacturer if applicable. Install lapped in direction to shed water. Lap sides not less than 3-1/2 inches. Lap ends not less than 6 inches, staggered 24 inches between succeeding courses. Roll laps with roller. Cover underlayment within seven days.

1. Prime concrete and masonry surfaces to receive self-adhering sheet underlayment.
2. Extend underlayment over entire roof deck.

C. Metal-Flashed, Open-Valley Underlayment: Install two layers of 36-inch- wide felt underlayment centered in valley. Stagger end laps between layers at least 72 inches. Lap ends of each layer at least 12 inches in direction to shed water, and seal with asphalt roofing cement. Fasten each layer to roof deck with felt underlayment nails.

1. Lap roof-deck felt underlayment over first layer of valley felt underlayment at least 6 inches .

3.3 METAL FLASHING INSTALLATION

A. General: Install metal flashings and other sheet metal to comply with requirements in TRI/WSRCA's "Concrete and Clay Roof Tile Design Criteria Installation Manual for Moderate Climate Regions

1. Install metal flashings according to concrete roof tile manufacturer's written instructions and recommendations in NRCA's "The NRCA Roofing and Waterproofing Manual."

B. Apron Flashings: Extend lower flange over and beyond each side of downslope tile roofing and up the vertical surface.

C. Cricket / Backer Flashings: Install against roof-penetrating elements, extending concealed flange beneath upslope tile roofing and beyond each side.

D. Open-Valley Flashings: Install centrally in valleys, lapping ends at least 8 inches in direction to shed water. Fasten upper end of each length to roof deck beneath overlap.

E. Channel Flashings: Install over underlayment and fasten to roof deck with metal clips.

F. Rake Drip Edges: Install over underlayment and fasten to roof deck.

G. Eave Drip Edges: Install beneath underlayment and fasten to roof deck.

H. Pipe Flashings: Form flashing around pipe penetrations and tile roofing. Fasten and seal to tile roofing.

3.4 CLAY ROOF TILE INSTALLATION

A. General: Install concrete roof tiles according to manufacturer's written instructions, to recommendations in TRI/WSRCA's "Concrete and Clay Roof Tile Design Criteria Installation Manual for Moderate Climate Regions," and to NRCA's "The NRCA Roofing and Waterproofing Manual."

1. Maintain uniform exposure and coursing of clay roof tiles throughout roof.
2. Extend tiles 2 inches over eave fascia.
3. Nail Fastening: Drive nails to clear the clay roof tile so the tile hangs from the nail and is not drawn up.

    a. Install wire through nail holes of cut tiles that cannot be nailed directly to roof deck, and fasten to nails driven into deck.

4. Cut and fit concrete roof tiles neatly around roof vents, pipes, ventilators, and other projections through roof. Fill voids with mortar.

B. Clay Roof Tile Installation:

1. Install tiles to fit as designed.

C. Open Valleys: Cut clay roof tiles at open valleys to form straight lines. Widen exposed portion of open valley 1/8 inch in 12 inches from highest to lowest point.

1. Drill or notch cut valley tiles and wire-tie to fastener placed clear of valley metal flashings.
2. Do not nail tiles to metal flashings.

3.5 ADJUSTING AND CLEANING

A. Remove and replace damaged or broken concrete roof tiles.

B. Remove excess concrete roof tiles and debris from Project site.

END OF SECTION 073216

WRECORP

Roof Construction Requirements

1. Roof deck must be cleared of all debris.
2. All roof slopes must be properly sloped to the drains. All drains and scuppers must be a minimum 1-1/2” below roof surface. Overflows shall be 2” above primary drain.
3. All drains must be sumped and made of steel.
4. All drains must be blocked to prevent debris from entering the drains. The drain blocks must be removed at the end of each workday.
5. All curbs must be built to meet the minimum height of 8” above the finished roof surface. (Roof surface includes the crickets)
6. All penetrations must be a minimum height of 8” above finished roof surface.
7. All curbs and penetrations must have a minimum 18” separation between each other, walls and cricket valleys.
8. No PVC jacks will be permitted.
9. No wood is permitted to be used as supports for units or pipes and conduits.
10. No unistruts permitted.
11. All flashing jacks must have a minimum 6” base flange on all sides.
12. Core samples may be taken and the roofing contractor will be responsible for making all repairs at no additional charge.
13. The roofing will be watertight at the end of each day.
14. An area free of obstruction and debris will be made available for the staging of materials and equipment.
15. Roofing debris will be gathered and secured in trash bags daily and removed from the roof in a timely manner.
16. Manufacturer shall provide a list to the consultant of personnel on the job that have completed the minimum 4 hour manufacturer accreditation.
17. Roofing contractor will be required to complete a daily work report detailing the work completed along with weather conditions and area of the roof work. That report shall be turned into the consultant daily.

6829 W. Corrine Dr. 623-878-7117
Peoria, AZ 85381

Phoenix Community College
PC Downtown

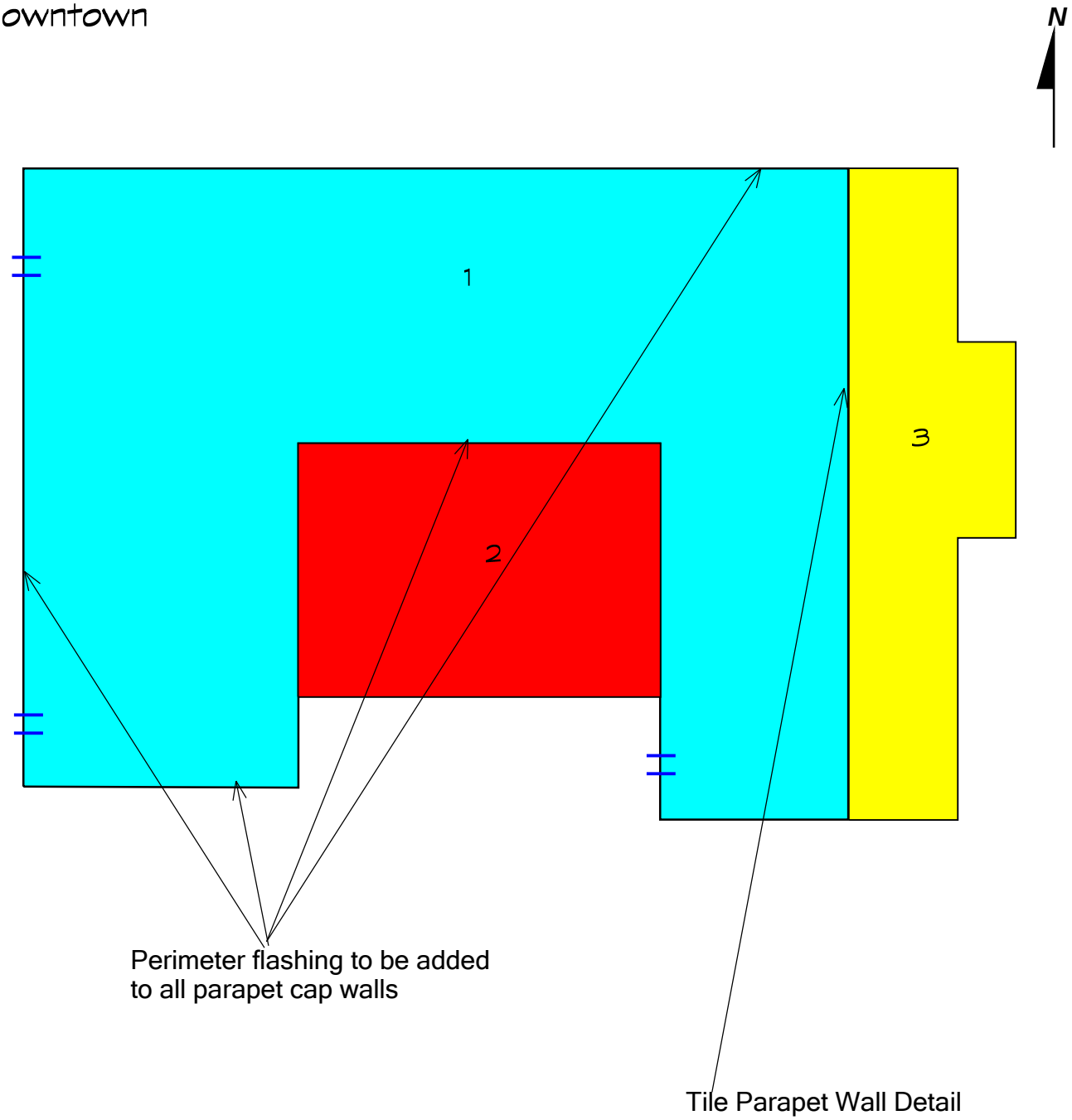

No Work On Roof Section

Flat Roofing Re-Roof

Tile R/R

Roofing Contractor responsible to field verify conditions and measurements

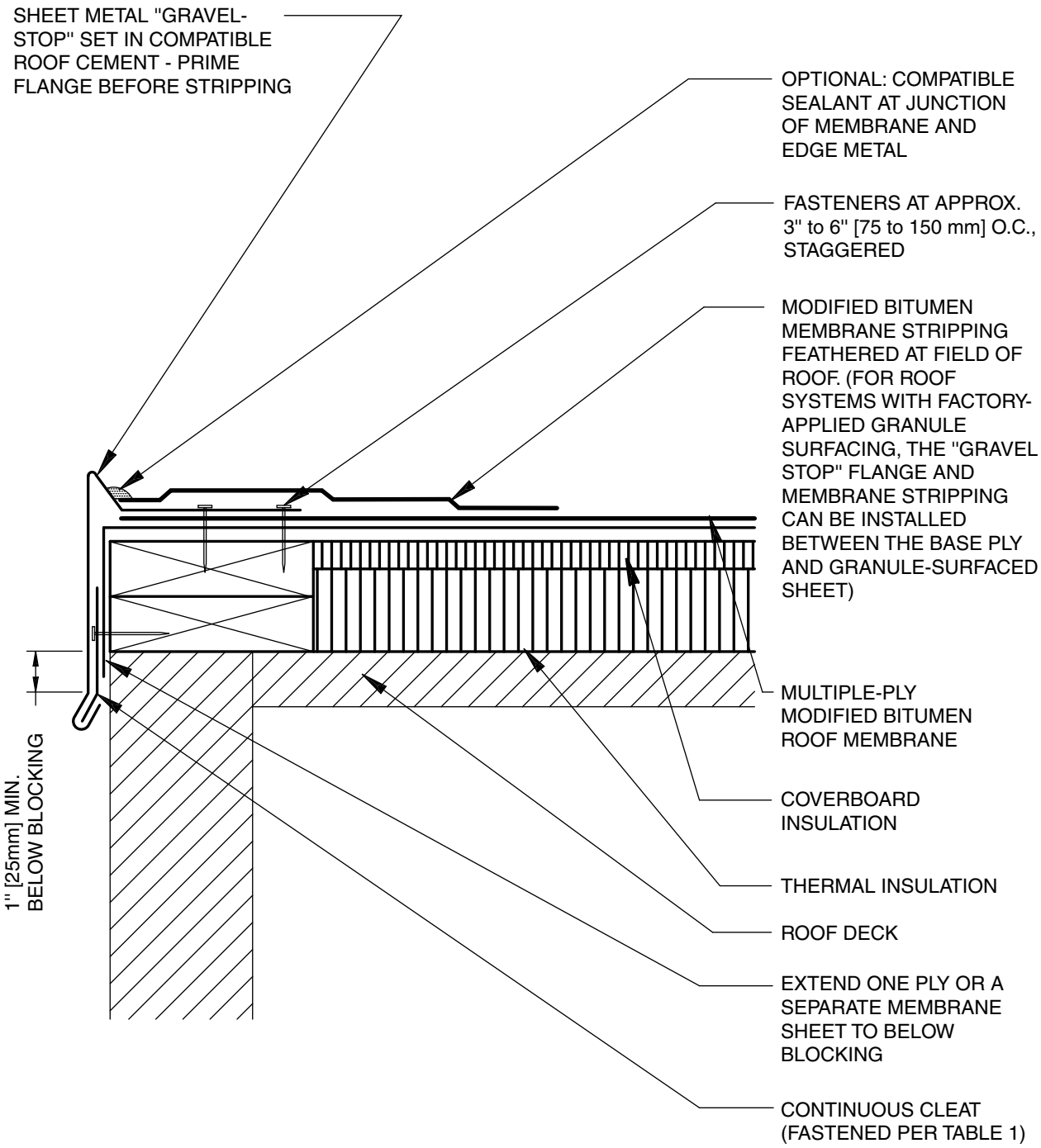

NOTES :

1. NRCA SUGGESTS AVOIDING (WHERE POSSIBLE) FLASHING DETAILS THAT REQUIRE RIGID METAL FLANGES TO BE EMBEDDED OR SANDWICHED INTO THE ROOF MEMBRANE. (SEE MB-1 FOR THE PREFERRED PERIMETER CONSTRUCTION.)
2. REFER TO SHEET METAL SECTION OF THE METAL ROOFING MANUAL FOR JOINERY AND SECUREMENT OPTIONS FOR SHEET METAL.
3. REFER TO THE INTRODUCTION FOR ADDITIONAL INFORMATION.

NATIONAL ROOFING CONTRACTORS ASSOCIATION

EMBEDDED EDGE METAL FLASHING (GRAVEL-STOP)

2001

NOT DRAWN TO SCALE

MB-3S

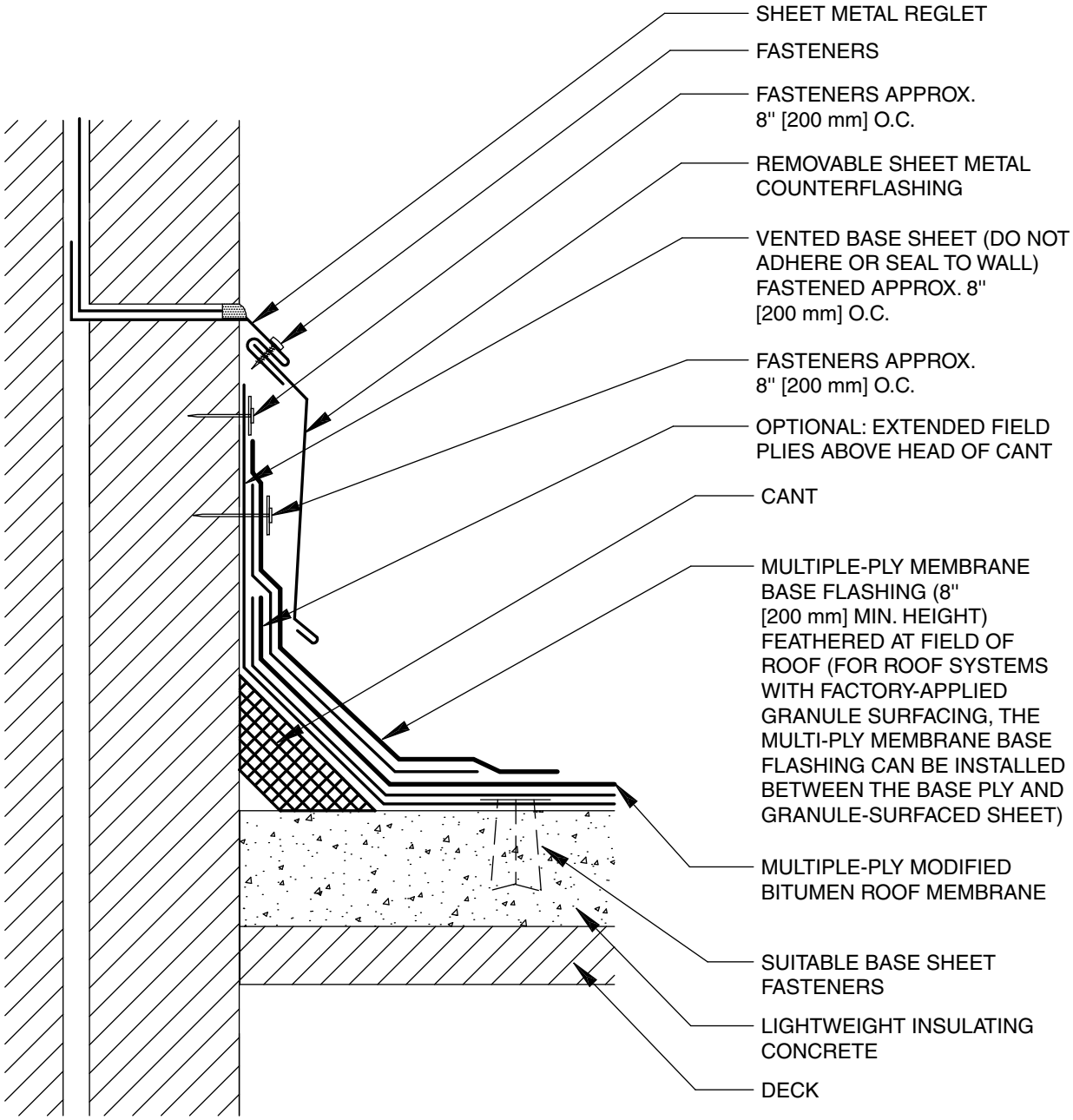

NOTES :

1. THIS DETAIL TO BE USED OVER WET-FILL DECKS (E.G., LIGHTWEIGHT INSULATING CONCRETE, POURED GYPSUM)
2. THIS DETAIL SHOULD BE USED ONLY WHERE THE DECK IS SUPPORTED BY THE WALL.
3. ALL PLIES ARE TO BE SOLIDLY MOPPED TO THE BASE SHEET. CARE SHOULD BE USED NOT TO ADHERE THE BASE SHEET TO THE WALL.
4. REFER TO THE SHEET METAL SECTION OF THE METAL ROOFING MANUAL FOR JOINERY AND SECUREMENT OPTIONS FOR SHEET METAL.
5. REFER TO THE INTRODUCTION FOR ADDITIONAL INFORMATION.

NATIONAL ROOFING CONTRACTORS ASSOCIATION

BASE FLASHING FOR VENTED BASE SHEET

2001

NOT DRAWN TO SCALE

MB-5AS

RAISED CURB

WOOD NAILER

SEALING MATERIAL

GASKETED FASTENERS MINIMUM TWO FASTENERS PER SIDE

REMOVABLE SHEET METAL COUNTERFLASHING

FASTENERS APPROX. 8" [200 mm] O.C.

OPTIONAL: EXTENDED FIELD PLIES ABOVE HEAD OF CANT

APPROX. 4" [100 mm]

MULTIPLE-PLY MEMBRANE BASE FLASHING (8" [200 mm] MIN. HEIGHT) FEATHERED AT FIELD OF ROOF (FOR ROOF SYSTEMS WITH FACTORY-APPLIED GRANULE SURFACING, THE MULTI-PLY MEMBRANE BASE FLASHING CAN BE INSTALLED BETWEEN THE BASE PLY AND GRANULE-SURFACED SHEET)

ALTERNATE CURB BEARING LOCATION FOR HEAVY WEIGHT LOADING CONDITIONS

WOOD NAILER

MULTIPLE-PLY MODIFIED BITUMEN ROOF MEMBRANE

COVERBOARD INSULATION

THERMAL INSULATION

ROOF DECK

OPTIONAL :

MECHANICAL UNIT, HOOD, ETC.

BASE OF UNIT EXTENDS 1/2" [13 mm] MINIMUM BEYOND TOP OF CURB

SEALING MATERIAL - MUST BE CONTINUOUS ON TOP OF THE CURB

1" [25 mm] MINIMUM BELOW TOP OF CURB

FLASHING RECEIVER

WOOD NAILER

FASTENERS

COUNTERFLASHING

BASE FLASHING

RAISED CURB

INSULATION

NOTES :

1. THE CURBS, TOP WOOD NAILER, AND SEAL STRIP ARE TO BE SUPPLIED BY THE CURB MANUFACTURER.
2. WHEN POSSIBLE, THE MECHANICAL UNITS SHOULD NOT BE SET UNTIL THE ROOF MEMBRANE AND FLASHING HAVE BEEN INSTALLED.
3. REFER TO THE INTRODUCTION FOR ADDITIONAL INFORMATION.
4. REFER TO THE SHEET METAL SECTION OF THE METAL ROOFING MANUAL FOR JOINERY AND SECUREMENT OPTIONS FOR SHEET METAL.

NATIONAL ROOFING CONTRACTORS ASSOCIATION

RAISED CURB DETAIL FOR ROOFTOP AIR HANDLING UNITS AND DUCTS (PREFABRICATED METAL CURB)

2001

NOT DRAWN TO SCALE

MB-12

RAISED CURB

WOOD NAILER

SEALING MATERIAL

GASKETED FASTENERS MINIMUM TWO FASTENERS PER SIDE

REMOVABLE SHEET METAL COUNTERFLASHING

FASTENERS APPROX. 8" [200 mm] O.C.

OPTIONAL: EXTENDED FIELD PLIES ABOVE HEAD OF CANT

APPROX. 4" [100 mm]

MULTIPLE-PLY MEMBRANE BASE FLASHING (8" [200 mm] MIN. HEIGHT) FEATHERED AT FIELD OF ROOF (FOR ROOF SYSTEMS WITH FACTORY-APPLIED GRANULE SURFACING, THE MULTI-PLY MEMBRANE BASE FLASHING CAN BE INSTALLED BETWEEN THE BASE PLY AND GRANULE-SURFACED SHEET)

ALTERNATE CURB BEARING LOCATION FOR HEAVY WEIGHT LOADING CONDITIONS

WOOD NAILER

MULTIPLE-PLY MODIFIED BITUMEN ROOF MEMBRANE

COVERBOARD INSULATION

THERMAL INSULATION

ROOF DECK

OPTIONAL :

MECHANICAL UNIT, HOOD, ETC.

BASE OF UNIT EXTENDS 1/2" [13 mm] MINIMUM BEYOND TOP OF CURB

SEALING MATERIAL - MUST BE CONTINUOUS ON TOP OF THE CURB

1" [25 mm] MINIMUM BELOW TOP OF CURB

FLASHING RECEIVER

WOOD NAILER

FASTENERS

COUNTERFLASHING

BASE FLASHING

RAISED CURB

INSULATION

NOTES :

1. THE CURBS, TOP WOOD NAILER, AND SEAL STRIP ARE TO BE SUPPLIED BY THE CURB MANUFACTURER.
2. WHEN POSSIBLE, THE MECHANICAL UNITS SHOULD NOT BE SET UNTIL THE ROOF MEMBRANE AND FLASHING HAVE BEEN INSTALLED.
3. REFER TO THE INTRODUCTION FOR ADDITIONAL INFORMATION.
4. REFER TO THE SHEET METAL SECTION OF THE METAL ROOFING MANUAL FOR JOINERY AND SECUREMENT OPTIONS FOR SHEET METAL.

NATIONAL ROOFING CONTRACTORS ASSOCIATION

RAISED CURB DETAIL FOR ROOFTOP AIR HANDLING UNITS AND DUCTS (PREFABRICATED METAL CURB)

2001

NOT DRAWN TO SCALE

MB-12

SEALING MATERIAL

WOOD CURB

GASKETED FASTENERS MINIMUM TWO FASTENERS PER SIDE

SHEET METAL COUNTERFLASHING

FASTENERS APPROX. 8" [200 mm] O.C.

OPTIONAL: EXTENDED FIELD PLIES ABOVE HEAD OF CANT

APPROX. 4" [100 mm]

MULTIPLE-PLY MEMBRANE BASE FLASHING (8" [200 mm] MIN. HEIGHT) FEATHERED AT FIELD OF ROOF (FOR ROOF SYSTEMS WITH FACTORY-APPLIED GRANULE SURFACING, THE MULTI-PLY MEMBRANE BASE FLASHING CAN BE INSTALLED BETWEEN THE BASE PLY AND GRANULE-SURFACED SHEET)

WOOD NAILERS

CANT

MULTIPLE-PLY MODIFIED BITUMEN ROOF MEMBRANE

COVERBOARD INSULATION

THERMAL INSULATION

ROOF DECK

ALTERNATE :

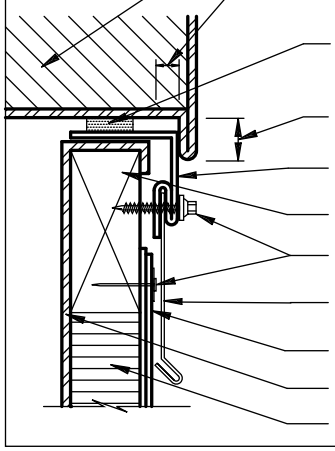

MECHANICAL UNIT, HOOD, ETC.

BASE OF UNIT EXTENDS 1/2" [13 mm] MINIMUM BEYOND TOP OF CURB

SEALING MATERIAL - MUST BE CONTINUOUS ON TOP OF THE CURB

1" [25 mm] MINIMUM BELOW TOP OF CURB

FLASHING RECEIVER

WOOD NAILER

FASTENERS

COUNTERFLASHING

BASE FLASHING

RAISED CURB

INSULATION

NOTES :

1. WHEN POSSIBLE, THE MECHANICAL UNITS SHOULD NOT BE SET UNTIL THE ROOF MEMBRANE AND FLASHING HAVE BEEN INSTALLED.
2. REFER TO THE INTRODUCTION FOR ADDITIONAL INFORMATION.
3. REFER TO THE SHEET METAL SECTION OF THE METAL ROOFING MANUAL FOR JOINERY AND SECUREMENT OPTIONS FOR SHEET METAL.

NATIONAL ROOFING CONTRACTORS ASSOCIATION

RAISED CURB DETAIL FOR ROOFTOP AIR HANDLING UNITS AND DUCTS (JOB SITE CONSTRUCTED WOOD CURB)

MB-13

2001

NOT DRAWN TO SCALE

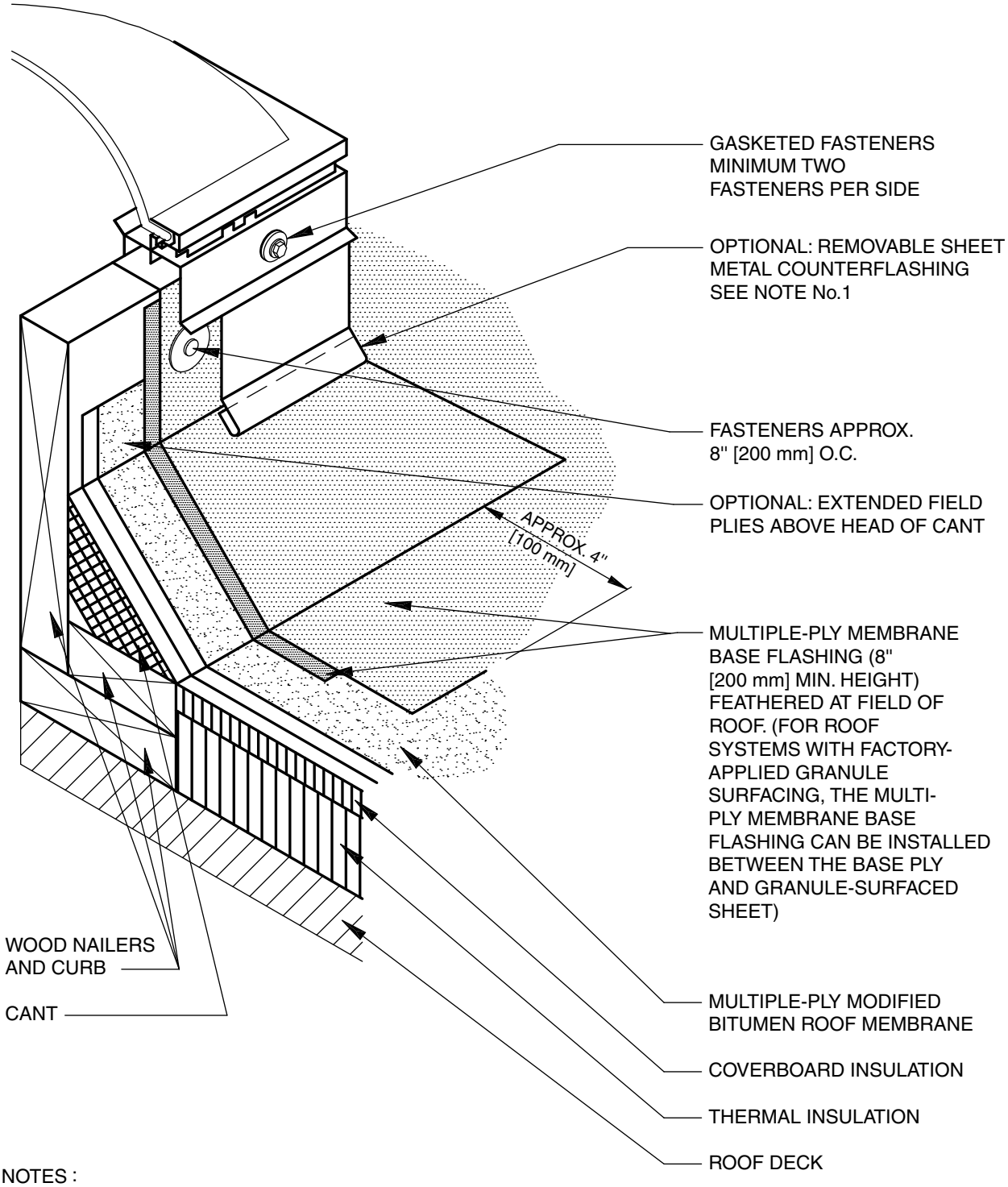

NOTES :

1. WHERE THE SKYLIGHT, SCUTTLE, OR SMOKE VENT FRAME OVERLAPS THE BASE FLASHING AT LEAST 3" [75 mm], THE REMOVABLE SHEET METAL COUNTERFLASHING IS NOT REQUIRED.
2. REFER TO THE INTRODUCTION FOR ADDITIONAL INFORMATION.
3. REFER TO THE SHEET METAL SECTION OF THE METAL ROOFING MANUAL FOR JOINERY AND SECUREMENT OPTIONS FOR SHEET METAL.

NATIONAL ROOFING CONTRACTORS ASSOCIATION

SKYLIGHT, SCUTTLE, AND SMOKE VENT

2001

NOT DRAWN TO SCALE

MB-14

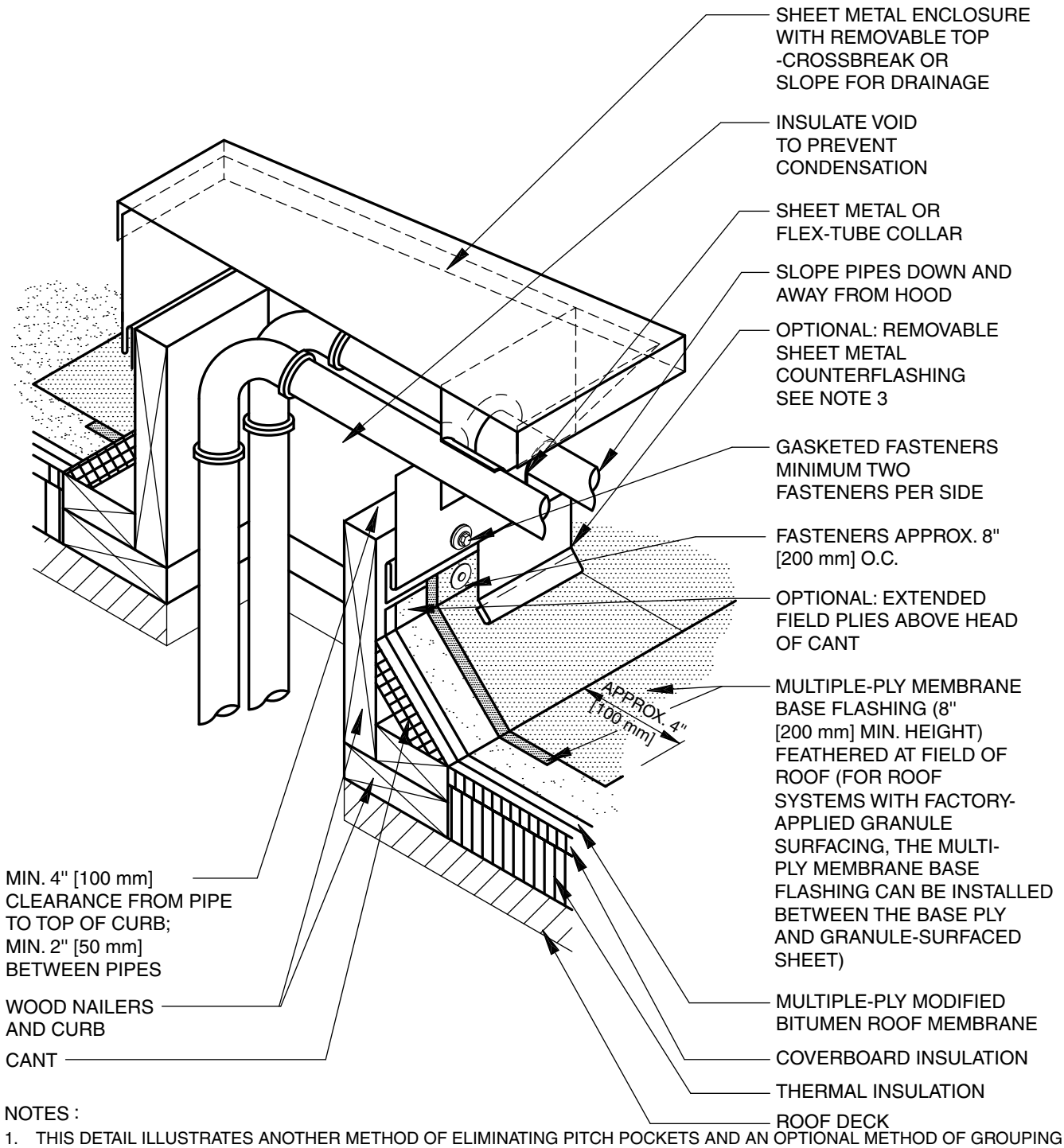

NOTES :

1. THIS DETAIL ILLUSTRATES ANOTHER METHOD OF ELIMINATING PITCH POCKETS AND AN OPTIONAL METHOD OF GROUPING PIPING THAT MUST PENETRATE THE ROOF.
2. MANY MANUFACTURERS OFFER PREFABRICATED BOOTS AND OTHER MATERIALS FOR THIS PURPOSE. SPECIFICS ON THESE PROPRIETARY DESIGNS VARY GREATLY, AND INDIVIDUAL MANUFACTURERS' SPECIFICATIONS SHOULD BE CONSULTED FOR THEIR USE.
3. WHERE THE SHEET METAL ENCLOSURE OVERLAPS THE BASE FLASHING AT LEAST 3" [75 mm], THE REMOVABLE SHEET METAL COUNTERFLASHING IS NOT REQUIRED.
4. REFER TO THE INTRODUCTION FOR ADDITIONAL INFORMATION.
5. REFER TO THE SHEET METAL SECTION OF THE METAL ROOFING MANUAL FOR JOINERY AND SECUREMENT OPTIONS FOR SHEET METAL.

NATIONAL ROOFING CONTRACTORS ASSOCIATION

SHEET METAL ENCLOSURE FOR PIPING THROUGH ROOF DECK

2001

NOT DRAWN TO SCALE

MB-16

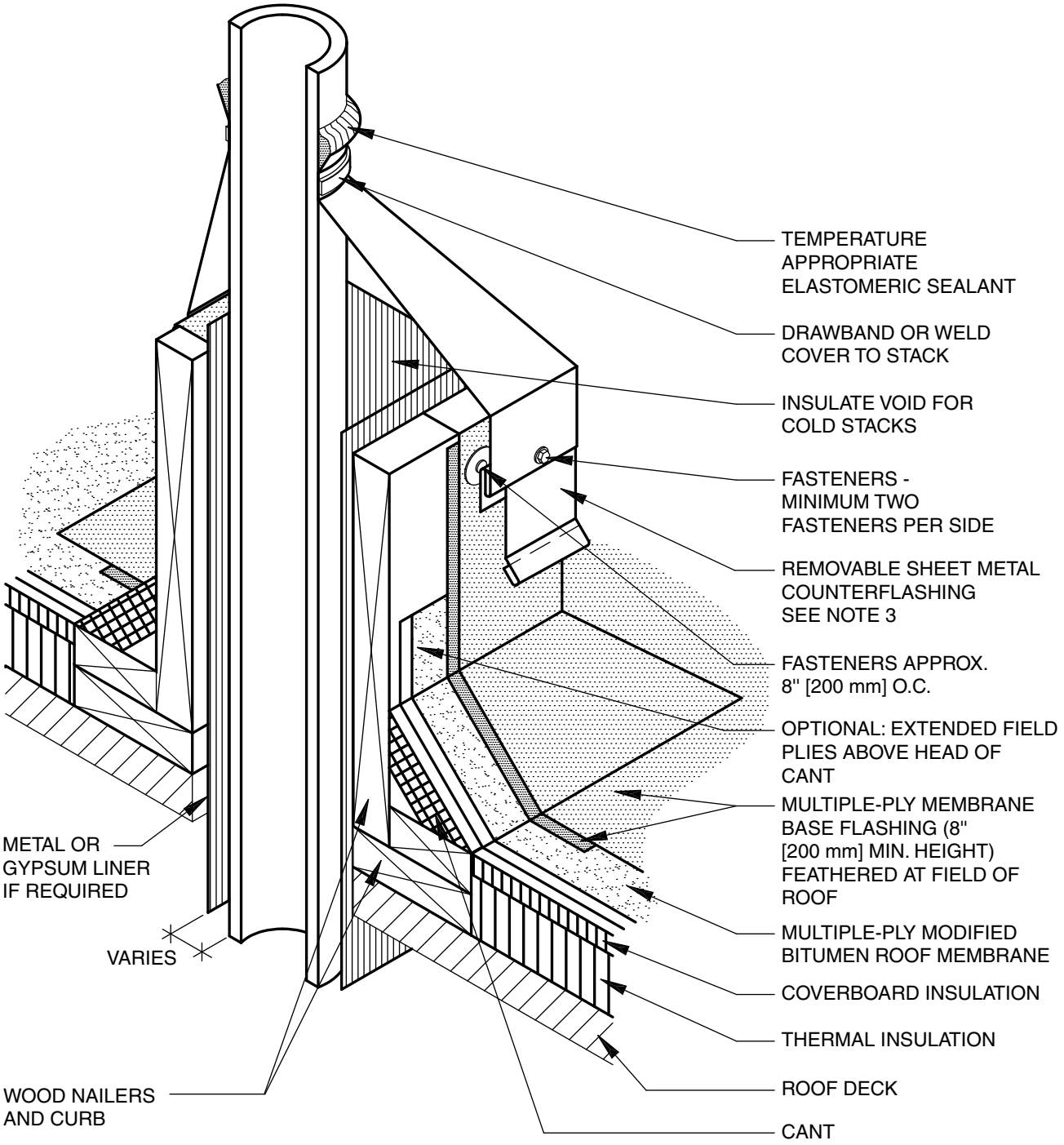

NOTES :

1. THIS DETAIL ALLOWS THE OPENING TO BE COMPLETED BEFORE THE STACK IS PLACED.
2. THE CLEARANCE NECESSARY BETWEEN THE OPTIONAL GYPSUM OR METAL LINER AND THE STACK, AND THE NEED FOR INSULATION, WILL DEPEND ON THE TEMPERATURE OF THE MATERIAL HANDLED BY THE STACK.
3. WHERE THE ISOLATED STACK COVER OVERLAPS THE BASE FLASHING AT LEAST 3" [75 mm], THE REMOVABLE SHEET METAL COUNTERFLASHING IS NOT REQUIRED.
4. REFER TO THE INTRODUCTION FOR ADDITIONAL INFORMATION.
5. REFER TO THE SHEET METAL SECTION OF THE METAL ROOFING MANUAL FOR JOINERY AND SECUREMENT OPTIONS FOR SHEET METAL.

NATIONAL ROOFING CONTRACTORS ASSOCIATION

ISOLATED STACK FLASHING (HOT OR COLD)

2001

NOT DRAWN TO SCALE

MB-17

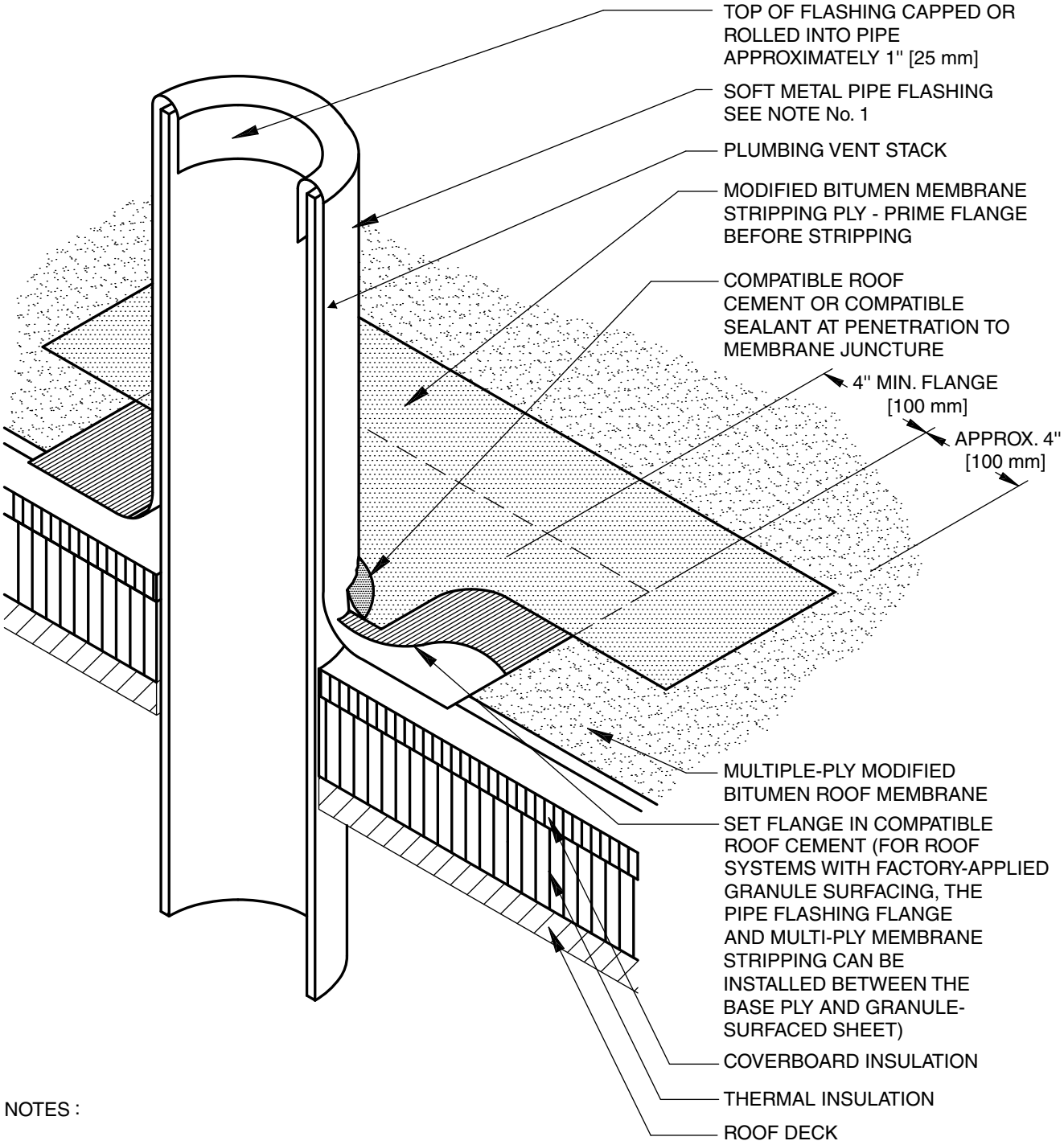

NOTES :

1. SOFT METAL PIPE FLASHING:
   -SHEET LEAD: MINIMUM OF 2 1/2 LB. PER SQUARE FOOT [12 kg/m^2] OR
   -SHEET COPPER: MINIMUM 16 OZ. [5 kg/m^2]
   PRECAUTIONS SHOULD BE TAKEN NOT TO DAMAGE THE SHEET LEAD WHEN USING HEAT-WELDED APPLICATION.
2. IF USING COPPER FLASHING OVER AN IRON OR STEEL PIPE, INSERT A SEPARATOR SHEET (E.G., ASPHALT-SATURATED ROOFING FELT), WRAPPED AROUND PIPE, TO SEPARATE THE COPPER FLASHING FROM DIRECT CONTACT WITH PIPE, TO REDUCE GALVANIC ACTION.
3. VENT STACKS AND OTHER PIPES SHOULD HAVE A MINIMUM OF 12 INCHES [300 mm] OF CLEARANCE ON ALL SIDES FROM WALLS, CURBS, AND OTHER PROJECTIONS TO FACILITATE PROPER FLASHING. (SEE TABLE 4.)
4. REFER TO THE INTRODUCTION FOR ADDITIONAL INFORMATION.

NATIONAL ROOFING CONTRACTORS ASSOCIATION

PLUMBING VENT

2001

NOT DRAWN TO SCALE

MB-18

MCCCD
PCC
Civic Center (PC Downtown)
640 N. 1st Ave.
Phoenix, AZ 85003

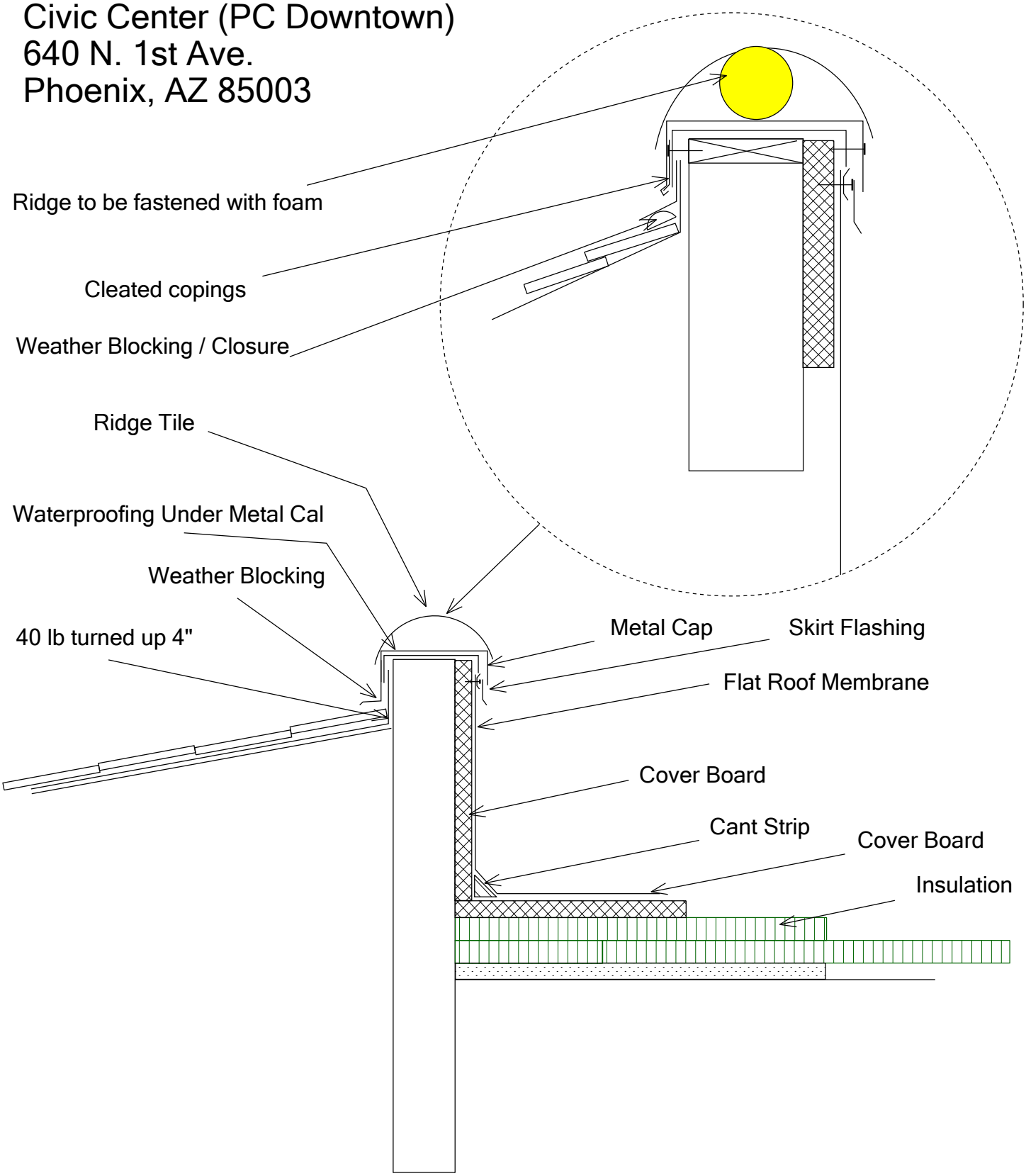

Tile HeadWall Flashing Detail

SINGLE-LAYER UNDERLAYMENT

MC-01A

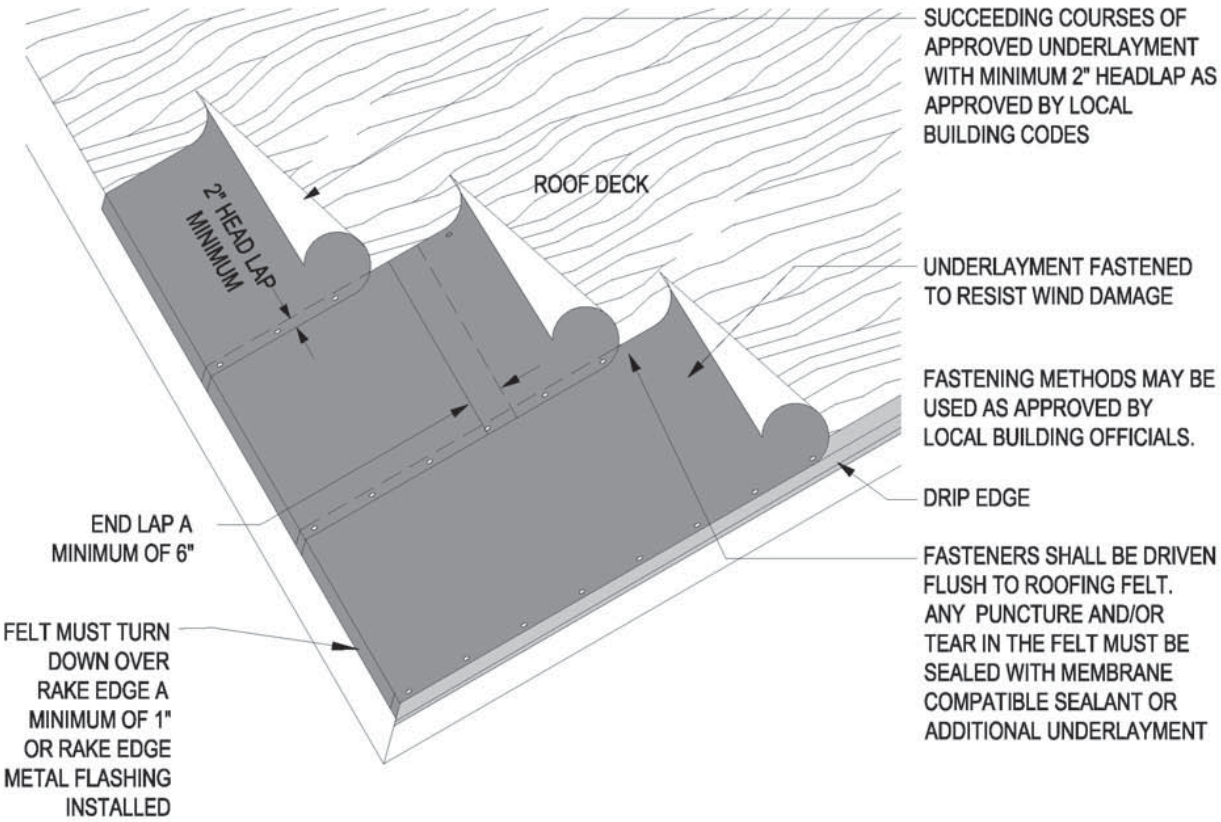

Note:
Roof slopes below 3:12 shall have an approved built-up roof membrane, applied in accordance with Table 1A, or a single ply roof membrane system, or other multi-ply underlayment system(s) approved by the local building official.

ICE DAM PROTECTION WHERE REQUIRED. SEE TABLES 1A & 1B

Notes:

1. Ensure that the roof deck is properly fastened, clean and smooth before underlayment and roof tiles are applied.
2. Verify that the roof deck has no significant delamination, warpage, etc. Check for roof deck decay or damage.
3. Make sure repairs are made to the roof deck as necessary to meet local building codes.
4. Most problems with water-shedding roof installations occur from water that migrates through improper flashing of the tile, wind-driven rain or ice damming. Because of this possibility, the underlayment is critical to the success of the roof system.
5. For recommended underlayment and fastening requirements, see Table 1A and 1B.
6. Underlayment should extend a minimum of 4" up vertical wood blocking or wall. Laps should be a minimum of 6" endlap (vertical lap) and 2" headlap (horizontal lap.)

Drawing shown depicts the application of all tile profiles. Unless otherwise noted it would apply to either concrete or clay tiles.

TILE PENETRATION FLASHING

(Shows Required Two-Step Deck And Tile Flashing)

MC-02

STEP 1: DECK FLASHING

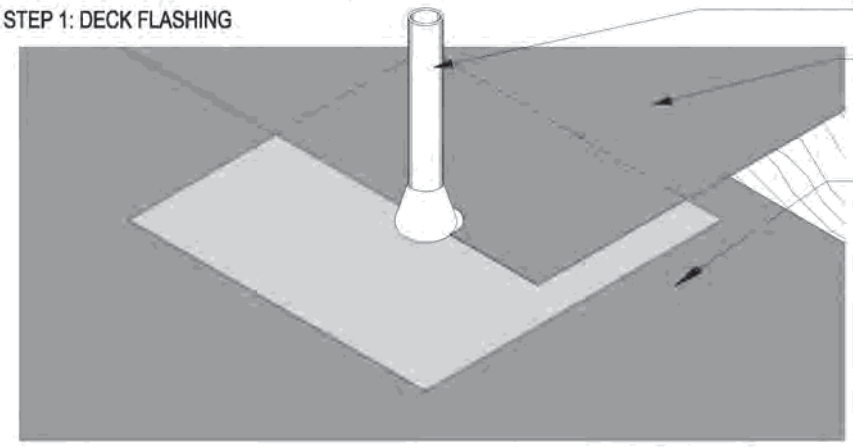

STEP 2: TILE FLASHING

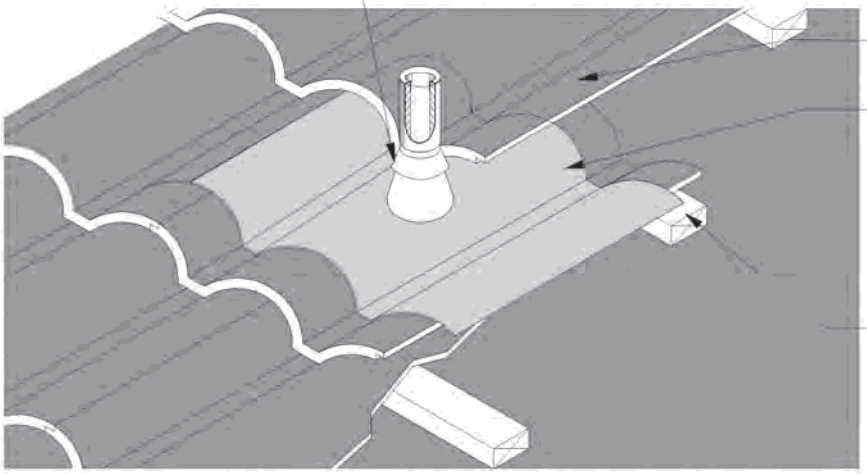

ALL PENETRATIONS SHOULD BE LOCATED IN SUCH A MANNER AS TO NOT IMPEDE FLASHINGS AT ROOF TRANSITION.

Notes:

1. For recommended underlayment and fastening requirement, see Table 1A and 1B.
2. All penetrations require a deck flashing and tile flashing.
3. Tile flashings shall extend onto the tile a minimum of 4" on flat tile and a minimum of 1" past the crown of a profiled tile.
4. Dimensions shown are minimums and are intended to be approximate to allow for reasonable tolerances due to field conditions.
5. For flat tile, rigid flashing materials may be used.

Drawing shown depicts the application of all tile profiles. Unless otherwise noted it would apply to either concrete or clay tiles.

HEAD WALL FLASHING

MC-11

WITH COUNTERFLASHING (Z BAR)

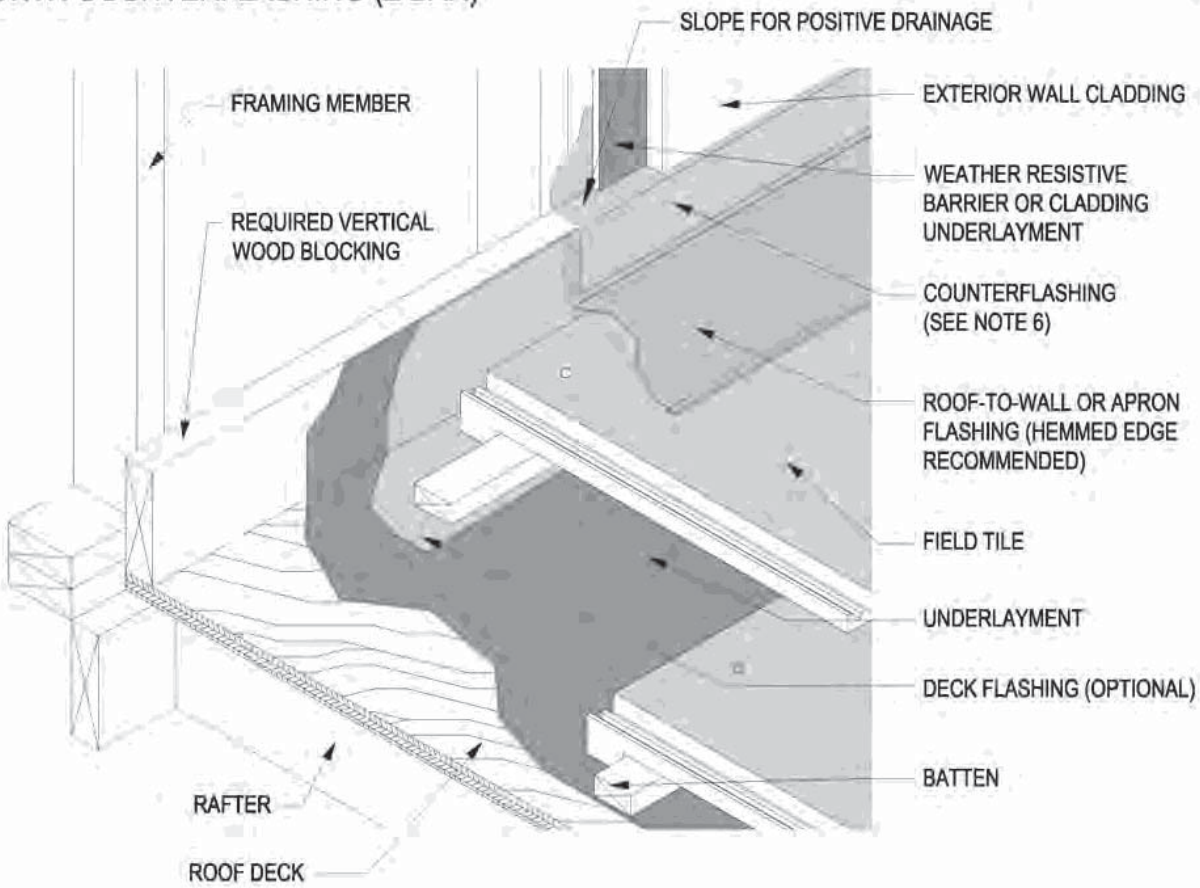

Note:
Openings at hips, ridges and head walls including chimneys, skylights, solar panels, and downslope horizontal abutments shall be fitted with weather blocking material to keep water on the surface of the field tile. Other methods approved by local building official will be allowed. See Technical Bulletin at www.tileroofing.org

Notes:

1. For recommened underlayment and fastening requirement, see Table 1A and 1B.
2. Underlayment shall extend a minimum of 4" up vertical wood blocking or wall.
3. Apron flashing or other roof-to-wall closure material is necessary at roof-to-wall intersections. Roof-to-wall/apron flashing should extend a minimum of 2" up vertical walls, and provide a minimum of 3" overlap/headlap onto tile. The apron flashing is required to be overlapped a minimum of 2" by sheet metal counterflashing or wall cladding.
4. Solid wood blocking is required behind Z-metal counterflashing applications.
5. Dimensions shown are minimums and are intended to be approximate to allow for reasonable tolerances due to field conditions, and area practices.
6. The bottom edge of the counterflashing height settings shall be set above the roof deck a minimum of 4" for flat tile, 5" for low profile tile, and 6" for high profile tile.
7. All roof flashing shall be a minimum of (No. 26 galvanized sheet gauge) not less than 0.019 inch corrosion-resistant metal (G90). See Table a for additional options.

Drawing shown depicts the application of all tile profiles. Unless otherwise noted it would apply to either concrete or clay tiles.

HIP AND RIDGE (Optional Method)

MC-18

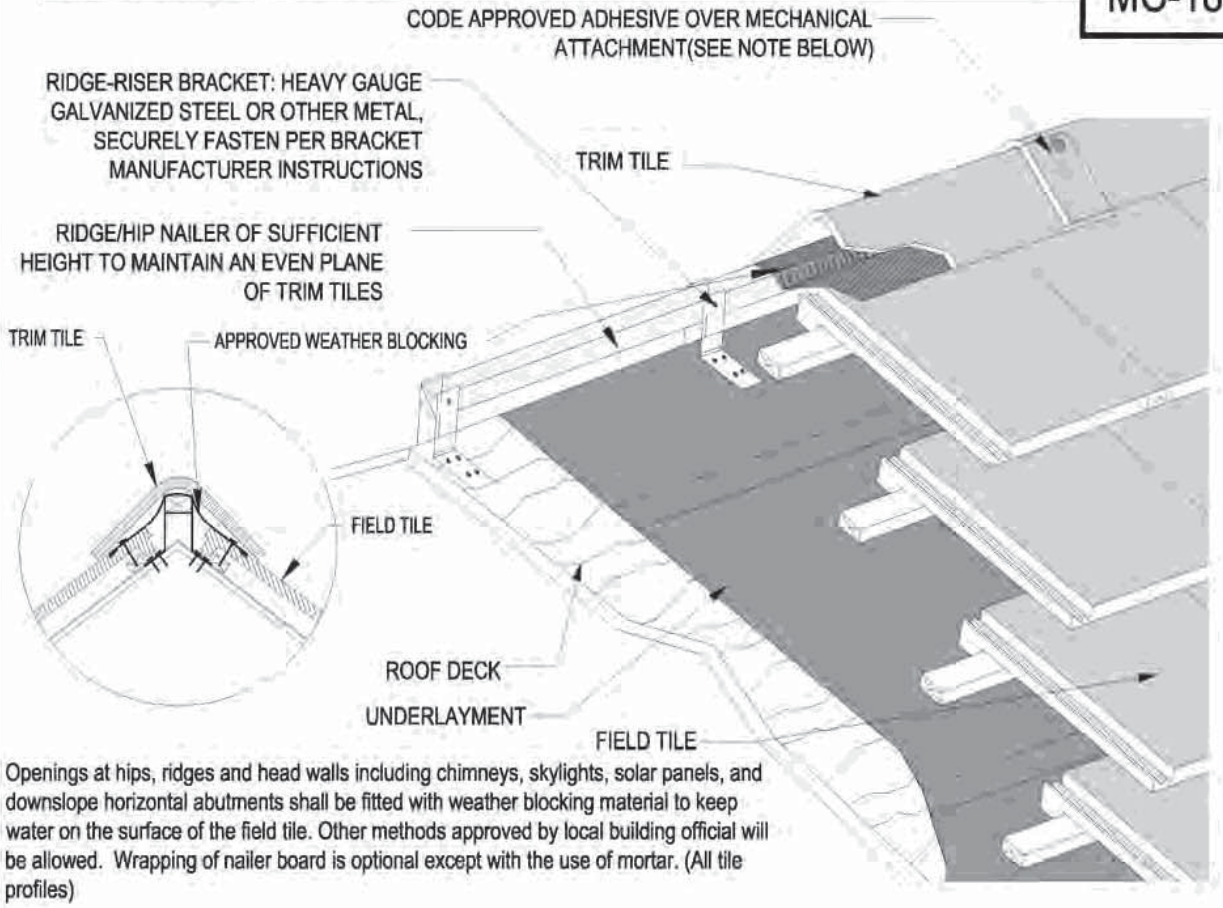

Openings at hips, ridges and head walls including chimneys, skylights, solar panels, and downslope horizontal abutments shall be fitted with weather blocking material to keep water on the surface of the field tile. Other methods approved by local building official will be allowed. Wrapping of nailer board is optional except with the use of mortar. (All tile profiles)

Notes:

1. For recommended underlayment and fastening requirement, see Table 1A and 1B.
2. All hip and ridge tile are required to have a code approved adhesive between laps of trim tile to cover nail hole and create a bond between trim tiles.
3. Tiles to be cut in a manner to properly conform to the method of weatherblocking material used.
4. Battens for tiles with protruding anchor lugs are optional for slopes between 3:12 nd 7:12. Direct deck attachment of tile as approved by local building official is allowed.
5. Dimension shown are minimums and are intended to be approximate to allow for reasonable tolerance due to field conditions, and area practices.
6. Orientation and termination of ridge trim tiles may vary.

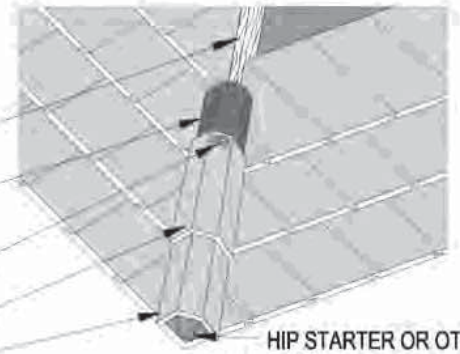

Drawing shown depicts the application of all tile profiles. Unless otherwise noted it would apply to either concrete or clay tiles.

RAKE TILE INSTALLATION

MC-19B

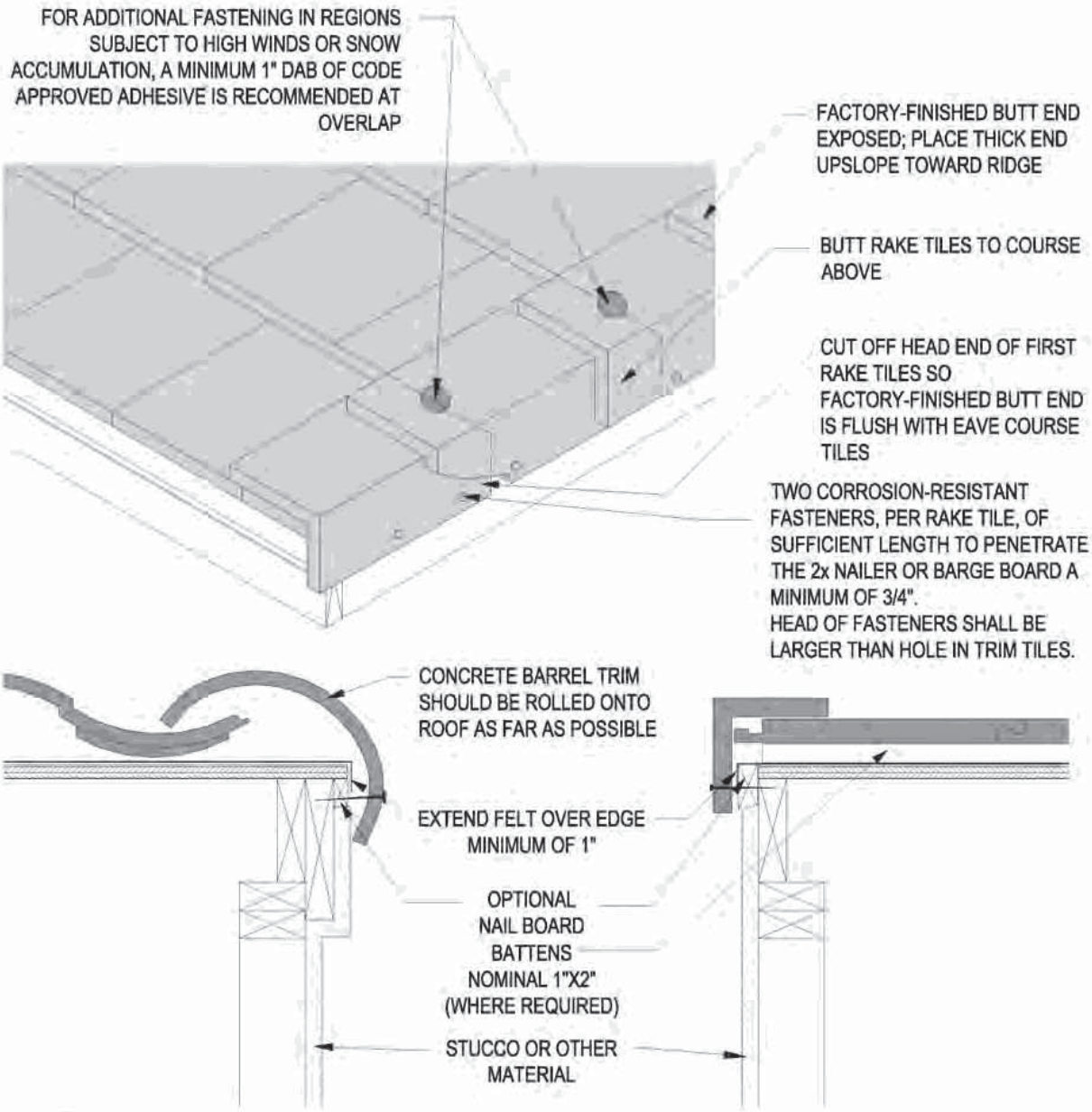

Notes:

1. Dimensions shown are minimums and are intended to be approximate to allow for reasonable tolerances due to field conditions, and area practices.
2. Rake tiles must be fastened into a minimum nominal 2" gable facia or equivalent in dimension.
3. The fasteners must penetrate a minimum of 3/4" into dimensional wood lumber.
4. See Table 1A for additional fastening instructions.

Drawing shown depicts the application of all tile profiles. Unless otherwise noted it would apply to either concrete or clay tiles.

GUTTERS

MC-23

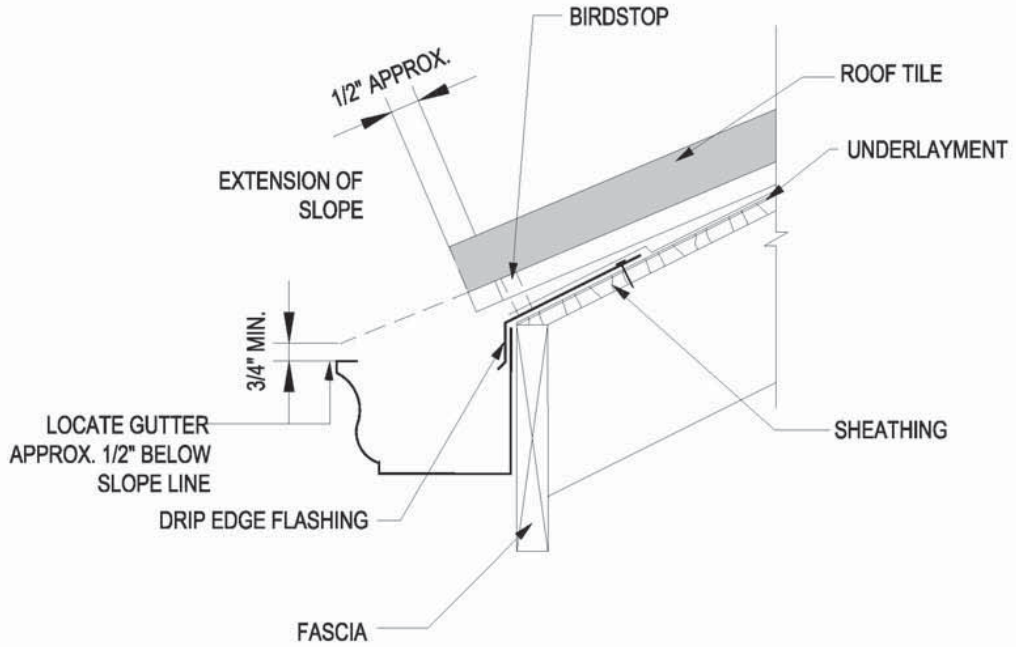

RECESSED FIRST COURSE

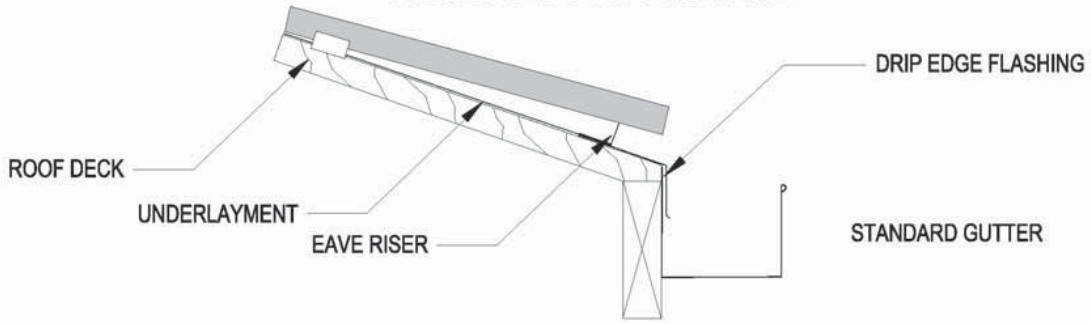

Notes:
This drawing is included to show one style of gutter installation since gutter conditions will vary by climate conditions. Please contact your local gutter manufacturer for specific installation requirements.

Notes:

1. For recommended underlayment and fastening requirement, see Table 1A and 1B.
2. An eave drip edge flashing is required with: stucco fascia, EIFS (Exterior Insulated Finish System) and flush fascia perimeter edges.
3. Battens for tiles with protruding anchor lugs are optional for slopes between 3:12 less than or equal to 7:12. Direct deck nailing attachment of tile may be permissible.
4. Eave closure should be of height equal to combined thickness of batten system and thickness of one course of tile.
5. Dimensions shown are minimums and are intended to be approximate to allow for reasonable tolerances due to field conditions.

Drawing shown depicts the application of all tile profiles. Unless otherwise noted it would apply to either concrete or clay tiles.

TABLE 1A

ROOFING TILE APPLICATION[1] FOR ALL TILES

	ROOF SLOPE 2 ½ UNITS VERTICAL IN 12 UNITS HORIZONTAL (21% Slope) TO LESS THAN 3 UNITS VERTICAL IN 12 UNITS	ROOF SLOPE 3 UNITS VERTICAL IN 12 UNITS HORIZONTAL (25% Slope) AND OVER
Deck Requirements	Sheathing must be adequate to support the loads involved, but not less than nominal 1-inch thick lumber or 15/32 inch thick plywood or other decking material recognized in a code evaluation report or by the local building official. The use of sheathing less than 15/32-inch will require supporting data.	
Underlayment In climate areas subject to wind driven snow, roof ice damming or special wind regions as shown in UBC Chapter 16, Figure 16-1 as defined by local building official.	Built-up membrane, multiple plies, three plies minimum, applied per building code requirements or code approved alternate.	Same as for other climate areas, except that extending from the eaves up the roof to a line 24" inside the exterior wall line of the building, two layers of underlayment shall be applied shingle fashion and solidly cemented together with an approved cementing material per UBC. As an option code approved self adhering membrane will be allowed.
Other Climates		Minimum one layer ASTM D226 Type II (No.30 Felt) (ASTM D4869 Type IV) head lapped 2 inches and end lapped 6 inches, or approved equal per UBC. For roof slopes of 3:12 to <4:12, two (2) layers of felt are required per IBC and IRC.
Attachment [2] Type of Fasteners	Fasteners shall comply with IRC section R905.3.6 and IBC section 1507.3.6 and UBC Section 1507.3. Corrosion resistant meeting ASTM A641Class I or approved equal, number 11 gauge diameter and of sufficient length to properly penetrate ¾" into or through the thickness of the deck or batten [2], whichever is less. The head of the nail used for tile fastening shall not be less than 5/16 inches and shall comply with ASTM F1667 for dimensional tolerances. Other fastening systems such as screws, wire, or adhesive based systems as approved by code, or local building officials will be allowed.	
Number of fasteners [1,2]	One fastener per tile. Flat Tile without vertical laps, two fasteners per tile. Tiles installed with projecting anchor lugs will be installed on counter battens, or other code approved methods.	Two fasteners per tile. Only one fastener on slopes of 7 units vertical in 12 units horizontal (58.3% slope) and less for tiles with installed weight exceeding 7.5 pounds per square foot, having a width no greater than 16 inches. [3]
Field Tile Head Lap	3 inches minimum, unless precluded by tile design	
Flashing	Flashing shall be (No. 26 galvanized sheet gage) not less than 0.019 inch corrosion-resistant metal with a minimum of 0.90 ounce zinc/sq. ft. (total for both sides) G90 sheet metal or equal.	

[1] For jurisdictions enforcing the:

IBC: In snow areas, a minimum of two fasteners per tile are required or battens and one fastener.

IRC: In snow areas, a minimum of two fasteners per tile are required.

UBC: In snow areas, a minimum of two fasteners per tile are required, or interlocking tiles with anchor lugs engaged on battens with one fastener.

[2] In areas designated by the local building official as being subject to wind velocities not in excess of 80 miles per hour "basic (fastest mile) wind speed" per the UBC; 100 miles per hour "basic (3 second gust) wind speed" per the IBC and the IRC or where mean roof height exceeds 40 feet, but not more 60 feet above grade, all tiles shall be attached as follows;

[2.1] The head of all tiles shall be fastened.

[2.2] The noses of all eave course tiles shall be fastened with clips, or other methods of attachment as approved by building code officials.

[2.3] All rake tiles shall be secured with two fasteners when required by IBC table 1507.3.7 and IRC section R905.3.7.

[2.4] The noses of all ridge, hip and rake tiles will be set in a bead of approved roofers mastic.

[2.5] Other methods of tile fastening will be allowed based upon submission of testing and approval of building code officials.

[2.6] For jurisdiction enforcing IBC and IRC, see appendix B for design considerations for high wind applications.

[3] On roof slopes over 24 units vertical in 12 units horizontal (200% slope), the nose end of all tiles shall be securely fastened.

TABLE 1B (Alternative option) For Roof Slopes Below 4:12 See Table 1A

ROOFING TILE APPLICATION FOR INTERLOCKING CONCRETE AND CLAY TILES WITH PROJECTING ANCHOR LUGS WHEN INSTALLED ON ROOF SLOPES OF 4 UNITS VERTICAL IN 12 UNITS HORIZONTAL (33% Slope) AND GREATER

	4 UNITS VERTICAL IN 12 UNITS HORIZONTAL (33% Slope) and over
Deck Requirements	Sheathing must be adequate to support the loads involved, but not less than nominal 1-inch thick lumber or 15/32- inch thick plywood or other decking material recognized in a code evaluation report or by the local building official. The use of sheathing less than 15/32- inch will require supporting data.
Underlayment In climate areas subject to wind driven snow, roof ice damming or wind regions as defined by local building codes	Solid sheathing one layer of ASTM D226 Type II (No. 30) (ASTM D4869 Type IV), or approved equal, lapped 2 inches horizontally and 6 inches vertically, except that extending from the eaves up the roof to a line 24 inches inside the exterior wall line of the building, two layers of the underlayment shall be applied shingle fashion and solidly cemented together with approved cemented material. As an option a code approved self adhering membrane may be used.
Underlayment for Other Climates	For spaced sheathing, approved reinforced membrane. For solid sheathing, a minimum single layer ASTM D226 Type II (No 30) (ASTM D4869 Type IV), or approved equal, felt lapped 2 inches horizontally and 6 inches vertically.
Attachment[1] Type of Fasteners	Fasteners shall comply with IRC section R905.3.6 and IBC section 1507.3.6 and UBC Section 1507.3 and shall comply with ASTM F1667 for tolerances. Corrosion resistant meeting ASTM A641 Class 1 or approved equal, or number 11 gauge diameter and of sufficient length to properly penetrate ¾" into or through the thickness of the deck or batten [3], whichever is less. The head of the nail used for tile fastening will not be less than 5/16 inches and shall comply with ASTM F1667 for tolerances. Other fastening systems such as screws, wire or adhesive based systems as approved by code, or local building officials will be allowed. Horizontal battens are required on solid sheathing for slopes greater than 7 units vertical in 12 units horizontal (58.3% Slope).[1, 2]
Number of fasteners Spaced/Solid sheathing With Battens or spaced sheathing [1, 2]	5 units vertical in 12 units horizontal and below (42% slope), fasteners not required. Above 5 units vertical in 12 units horizontal (42% slope) to less than 12 units vertical in 12 units horizontal (100% slope), one fastener per tile every other row or every other tile in each course. Twelve units vertical in 12 units horizontal (100% Slope) to 24 units vertical in 12 units horizontal (200% slope), one fastener every tile[4]. All perimeter tiles require one fastener[5]. Tiles with installed weight less than 9 pounds per square foot require a minimum of one fastener per tile, regardless of roof slope. See current codeapproved evaluation report for additional installation requirement.
Solid sheathing without battens [1, 2]	One fastener per tile
Field Tile Head Lap	3 inches minimum unless precluded by tile design
Flashing	Flashing shall be (No. 26 galvanized sheet gage) not less than 0.019 inch corrosion-resistant metal with a minimum of 0.90 ounce zinc/sq. ft. (total for both sides) G90 sheet metal or equal.

[1] For jurisdictions enforcing the:
IBC: In snow areas, a minimum of two fasteners per tile are required or battens and one fastener.
IRC: In snow areas, a minimum of two fasteners per tile are required.
UBC: In snow areas, a minimum of two fasteners per tile are required, or interlocking tiles with anchor lugs engaged on battens with one fastener.

[2] In areas designated by the local building official as being subject to wind velocities not in excess of 80 miles per hour "basic (fastest mile) wind speed" per the UBC; 100 mile per hour "basic (3 second gust) wind speed" per the IBC and the IRC or where mean roof height exceeds 40 feet, but not more than 60 feet above grade, all tiles shall be attached as follows:

[2.1] The heads of all tiles shall be fastened.

[2.2] The noses of all eave course tiles shall be fastened with clips, or other methods of attachment as approved by building code officials.

[2.3] All rake tiles shall be secured with two fasteners when required by IBC table 1507.3.7, IRC section R905.3.7 or UBC Table 15-D-2 as applicable.

[2.4] The noses of all ridge, hip and rake tiles shall be set in a bead of approved roofers mastic.

[2.5] Other methods of tile fastening will be allowed based upon submission of testing and approval of building code officials.

[2.6] For jurisdictions enforcing the IBC and the IRC, see appendix B for design considerations for high wind applications.

[3] Battens shall not be less than nominal 1-inch by 2-inch complying with IBC Chapter 23, section 2302. Provisions shall be made for drainage beneath battens by a minimum ¼-inch riser at each nail or by 4 foot long battens with at least ½-inch separation between battens or other methods approved by local building officials. For jurisdictions enforcing the UBC, battens shall be fastened with approved fasteners spaced not more than 24" O.C. For jurisdictions enforcing the IBC horizontal battens are required for slopes over 7:12.

[4] On roof slopes over 24 units vertical in 12 units horizontal (200% slope), the nose end of all tiles shall be securely fastened.

[5] Perimeter fastening areas include three tile courses but not less than 36 inches from either side of hips or ridges and edges of eaves and gable rakes.