DIVISION 2 SITEWORK

02220 SITE DEMOLITION

A. Scope of Work

Complete all demolition and disposal of demolished material for all items of work indicated on drawings, specified herein or as required for construction of the project. Contractor shall inspect the site and review construction drawings to determine level of work and details of pertinent information that would affect demolition work to be completed. Demolition work includes but is not limited to:

1. Demolish all existing concrete curbs and existing asphalt paving where shown and/or as required and haul off site to an approved disposal area.

2. Demolish the existing pylon signs and foundation complete and haul off site to an approved disposal area.

3. Contact all utility companies to disconnect any services prior to demolition.

4. Demolish all utilities after receiving necessary permits and haul off-site to an approved disposal area.

5. Contact necessary authorities for permits, pay and secure permits for all work to be demolished in the R.O.W. Demolish all items as shown on drawings and/or as required for new work and haul off site to an approved disposal area.

6. Install all safety barriers as required by City, NCDOT or as necessary to protect public.

7. Install all erosion and sedimentation control measures as shown on drawings.

8. Install all tree protection barrier prior to starting work.

9. Install all traffic control and/or construction signage as required by the City and/or NCDOT.

10. Contractor shall use demolition methods that shall not damage adjacent structures, road and utilities.

11. Contractor shall wet down or use other dust control measures to keep airborne debris, resulting from demolition work, from adjacent Owners and R.O.W.

12. Contractor shall work times as approved by the Owner or as required by City.

02230 SITE CLEARING

A. General

1. Perform all clearing, grubbing, filling and related items necessary to complete work shown on the drawings and specified herein. The subsurface exploration and evaluation are included in this Division and shall be followed in the execution of this work, except as noted on plans.

A. Clearing and Grubbing

1. This contractor shall perform all of the required clearing and grubbing for this project. Work shall include but shall not be limited to the following.

   a. Complete all necessary clearing and grubbing.

   b. Properly dispose of all existing debris off-site and all debris generated by this contractor. This includes all soils, roots, and other debris. Excess soils not used in the project shall be removed from site.

   c. This entire site, within clearing and grubbing limits, shall be cleared of miscellaneous deleterious materials such as glass, metal, plastics, underbrush, stumps, roots, stones larger than 3 inches, roots larger than ½ inch, wood, brick batts, paving materials and other debris. This clean up shall be accomplished and approved prior to beginning of stripping of top soil and rough grading. All such deleterious materials shall be disposed of off-site in an approved manner.

   d. All trees shall be completely removed including roots, to a depth not less than 2 feet below existing grade and also not less than 4 feet below finished building floor elevation.

   e. All trees under traffic and parking areas shall be completely removed including roots to a depth not less than 2 feet below existing grade and also not less than 3 feet below final five pavement grading.

   f. Existing trees to remain shall be protected from damage by construction activities with suitable barriers (plastic orange barrier fence).

g. All trees to be saved shall be marked with tape ID. Trunk and roots of these trees shall be protected by a suitable "barrier" which extends to the tree drip line.

h. All debris from clearing and grubbing operations shall be disposed of off-site by this contractor.

i. Burning of debris on-site will not be allowed.

STRIPPING

A. All areas under buildings, walkways, roadways and parking areas, and extending 5 feet in all direction beyond the limits of these facilities shall be "stripped" of top soil, organics and other deleterious material. This stripping operation shall extend a minimum depth of 8" below existing grades unless noted otherwise in the Geotechnical report.

B. Handling of Stripped Materials

1. Top soil from stripping operation shall be stored on site for use in grassing operations. All materials not used in the project shall be hauled to the approved on-site location.

2. Organics, roots and other deleterious materials removed by the stripping operations shall be disposed of off-site by the contractor in an approved manner.

C. Approval of Stripping

3. After the completion of stripping operation, the site shall be inspected by the geotechnical consultant to observe any areas of "unsuitable materials" which may remain in place after the stripping operation. If areas of "unsuitable materials" are encountered, these areas shall be excavated an additional 18 inches and these "unsuitable materials" shall be properly disposed of by the contractor. All areas of "unsuitable materials" removed shall be measured for payment as "in place" measurements.

4. All areas of under- cut shall be backfilled with suitable "general fill" material provided from on-site and/or off-site by the contractor as approved by the Geotechnical Engineer.

5. After stripping and under cutting is completed the entire stripped area shall be compacted until the soils at a depth of 12" achieve the requirements as listed in the Soils Report the Geotechnical

Consultant. This operation shall be observed by the geotechnical consultant and approved before the beginning of “rough grading” operation.

02310 GRADING

A. Rough grading includes the movement of suitable on-site material (cut and fill) within the limits of buildings, walkways, roadways, and parking areas and yard areas to obtain appropriate subgrade levels as required for these areas.

B. NCDOT Specifications

All references in these technical specifications and on drawings refer to NCDOT Specifications as described in the Soils Report by Geotechnical Consultant.

C. Placement of Material

The operators of mechanical equipment shall be observed by a qualified geotechnical technician. It is intended that subgrade soils shall have a net bearing capacity of not less than 2500 psf, at 2 foot or more below final grade and below bottom of foundation. This value shall be confirmed with a penetrometer.

If these values are not obtained, undercutting shall be performed as directed by and as defined by the Geotechnical Consultant. (Refer to Paragraph E, which follows.)

D. Undercut & Backfill

Undercut & Backfill of some "soft spots" may be required during the grading of on-site soils during the rough grading operations.

Undercut of "unsuitable materials", where authorized shall extend to a depth of eighteen inches (18"). Unsuitable material shall be disposed of off-site. Undercut areas shall be measured for payment. Undercut area shall be backfilled with any of the following as approved by the Geotechnical Engineer.

1. Suitable On-Site Soil.
2. Suitable "General Fill".
3. Suitable "Select Structural Fill".

This backfill shall be placed the same day as the excavation and shall be compacted to not less than 95% of Standard Proctor Density.

Payment for the work shall include the following: Payment shall be "in place" measurements. Backfill shall be "in place" compacted measurements and includes the following in the cubic yard in place cost.

1. Excavation.
2. Disposal of Unsuitable Material.
3. Furnishing and Placing Backfill to Grade.

E. Protection against erosion and standing water.

All grading operations shall be performed in such manner that erosion will be prevented and accumulation of standing water will be prevented.

F. Unsuitable or excess earth shall be disposed of on-site.

G. Restore to original grades and conditions all properties damaged by any activity related to the work and take adequate precautions to avoid settlement or cave-in of properties higher than site and silting, eroding or other damage to properties lower than site.

H. In-place soils may be highly sensitive to moisture. Never allow water to stand or become trapped on a foundation subgrade area. Provide positive drainage to any excavated areas at all times. If subgrade becomes saturated after undercutting, an additional amount of soil, to be determined by the Engineer, shall be removed at no cost to the Owner.

02315 EXCAVATION & FILL

A. General

Work under this paragraph shall include furnishing and placing of borrow fill material to bring the site, building area and roadway areas to the required subgrade elevation.

B. NCDOT Specifications

All references in these technical specifications and on drawings refer to NCDOT Specifications as specified in the Soils Report by the Geotechnical Consultant.

C. Materials

1. "General fill" may be used in yard areas not under building or roadway areas. This general fill shall be friable granular soil including little or no organic matter and which can be spread and compacted by conventional earth moving equipment. This material shall generally meet the requirements of NCDOT Standard Specification. Additional requirement of this "general fill" shall be per the Geotechnical Report.

2. "Select structural fill" shall be used for all areas under buildings and all roadway areas to bring elevations up to required subgrade elevation. This select structural fill shall be clean fine sand with less than 5% fines.

D. Placement of Borrow Fill Material

Placement of borrow fill shall be accomplished with standard earth moving equipment and shall be spread in layers not exceeding 8 inches of thickness and compacted to not less than 95 percent of the soils Standard Proctor Density, ASTM D698.

E. Protection Against Erosion and Standing Water

It shall be required that grading operations be performed in a manner to prevent the erosion of soils and to prevent the accumulation of standing water in any graded areas. Do all pumping as required to prevent the accumulation of standing water.

F. Compaction of Soils

All compaction of soils shall be in accordance with Section 02335 of these

specifications and in accordance with the Geotechnical Report, which is included as part of this specification.

G. Placement of Soils

1. Loosen existing soil for a depth of two inches (2") just before filling.

2. Do not place fill on frozen or frosty areas; or over debris, wood, or foreign material.

3. Place all fills and backfill in layers not over ten inches (10") thick and compacted per Section 02335.

4. Fill shall be compacted by approved equipment.

5. Soil moisture shall be maintained within 2 percentage points of the laboratory optimum moisture content during construction.

6. Positive surface drainage shall be maintained during earthwork operations. Do all pumping as required to maintain dry conditions.

7. All soil compactors shall be in accordance with Section 02335 of these specifications and with the soils reports of the Geotechnical Consultants.

EXCAVATION AND BACKFILL

A. Furnish all labor, material and equipment necessary to complete all excavating and backfilling as indicated on the drawings and specified herein.

B. The items of work to be performed include, but are not limited to:

Excavation and backfill for
1. Footings and other structures
2. Site utilities
3. Site drainage
4. Walls
5. Asphalt Paving

C. Excavation

Excavate to lines and elevations as necessary for the demolition and for removal down to and inclusive of foundations. Equipment and methods shall be suitable for the work at hand. Work shall conform to the

following unless indicated otherwise on the drawings.

1. Excavated material suitable for filling shall be separated from unsuitable materials.

2. Excavated material unsuitable for filling shall be removed from the construction site promptly, and disposed of.

3. Backfill to line and elevation, as necessary for proper construction of the work. Equipment and method shall be suitable for the work at hand. Work shall conform to the following, unless otherwise indicated on the drawings.
   a. Loosen existing soil for a depth of 2" just before filling.
   b. Do not place backfill in water, on muddy, frozen or frosty areas, or over debris, wood or foreign material.

D. Backfill

Backfill shall be placed in layers not exceeding ten inches (10") in thickness (loose) and compacted to not less than 98% Standard Proctor Density.

Backfill shall be “Select Structural Fill” conforming to NCDOT Standard Specifications with the additional requirement of the recommendations in the Soils Report.

02335 SUBGRADE

A. Scope of Work

Furnish all labor, materials and equipment necessary to perform soil compaction as indicated on the drawings and specified herein.

B. Minimum Densities

1. The following minimum direction of compacting soils in this project shall be as follows:

   a. Yard Area - 92%.
   b. Subgrade under buildings and traffic area - 95%.
   c. Structural fill and base course under building and foundations - 98%.

2. All densities shall conform to Standard Proctor Density/ASTM D0698.

3. Compaction of soils shall be performed in accordance with the report of the Geotechnical Consultant which is included as part of these specifications.

C. Field Test

Field density tests to check compaction compliance shall be conducted in all fill areas at a frequency of one per 2500 square feet of fill per lift. Testing will be the responsibility of the Contractor to coordinate with the Geotechnical Consultant. The cost of testing shall be paid by the Owner.

GEOTECHNICAL REPORT

A comprehensive Geotechnical Investigation has been performed by the Owner's Geotechnical Consultant.

This investigation was performed by Bunnell-Lammons Engineering, Inc.

The report of this investigation is included in its entirety herein, as part of these Contract Documents, at the end of Section 2335.

02360 SOIL TREATMENT

A. Scope

1. Qualifications: Treatment shall be performed by an experienced pest control operator registered and licensed in accordance with the regulations of the State of North Carolina.

2. Guarantee:

a. The Owner shall receive a written subterranean Termite Protection Contract with an effective date commencing on the date of Substantial Completion.

b. This Protection Contract shall be in full force for 12 months from Substantial Completion and is guaranteed in accordance with the terms of the Contract, renewable annually, at Owner's option, for the lifetime of the new structure (non-cancellable except by Owner).

c. The Termite Protection Contract shall provide for regular preventative inspections and any subsequent treatment needed. Any new subterranean termite damage done to the new structure or contents after the effective date of this Protection Contract shall be corrected at no additional cost to the Owner (except the annual renewal fee) up to $50,000.00.

d. The Pest Control Operator shall provide the General Contractor proof that there are adequate financial resources to fulfill the above contract terms.

B. Materials

Chemicals in Current Use, approved by E. P. A. shall be submitted for approval with proper application information prior to starting work.

C. Application for Sand/Clay Material

1. General: The following rates and location of application may be adjusted for job conditions to provide the cited guarantee. If application adjustment is indicated, advise the Contractor and the Engineer/Architect. Application of chemical shall not be in conflict with procedures indicated on the product label or the EPA.

2. Do not begin soil poisoning work until all soil preparations for slab

placement and backfill have been completed. Do not apply soil poison when surface water is present.

3. Under New Slabs: Treat fill under all new concrete floor slabs at the rate of 1-gallon per 10 square feet of area.

4. New Foundation Walls: Treat each uniformly on both sides of all exterior and interior foundation walls with the solution in a one foot wide strip at the rate of 2-gallons per linear feet of walls. Treat voids in unit masonry at the rate of 1-gallon per linear feet with treatment made at or near the footings.

5. Below Slab at expansion and control joints, conduit, pipes, etc., apply 2 gal./5lf.

02630 STORM DRAINAGE

A. Scope of Work

Furnish all labor, material and equipment necessary to complete all new drainage piping, drainage structures and curbs as shown on the plans or specified herein. Type of drainage pipe shall be as shown on drawings.

B. Permits and Codes

All new work shall comply with all applicable codes and regulations including the requirements of the City of Sylva & NCDOT.

C. Materials

1. Drainage Castings

Castings shall be of gray iron conforming to requirements of ASTM C-48, Class 30, unless specified elsewhere. All frames and covers shall be "heavy duty", "traffic bearing" type. (H-20 Loading).

2. Drainage Stone

Shall be #57 washed concrete gravel with less than 5% passing a #200 sieve.

C. HDPE Pipe

High Density Polyethylene (HDPE)
Storm sewer pipe shall be ADS N-12 or approved equal. The prescribed sized of pipe or nominal inside diameters. Pipe sizes shall be of the size and length as shown on the plans.

The product supplied under this specifications shall be high density polyethylene pipe with a corrugated exterior and smooth interior for 12" to 36:@ diameters meeting AASHTO M294-96 (Type S).

All material shall meet ASTM D3350 resin cell classification 335420C. Flow calculations shall be based on Mannings An@ value of 0.012.

Joints shall consist of a bell and spigot type joint with an O-ring rubber gasket meeting ASTM F477 place on the spigot end. At least two (2) corrugations of the spigot end must insert into the bell end. Pipe fittings shall conform to AASHTO M294 or as designed

by the Engineer.

4. Concrete Pipe

All concrete drainage pipe shall be reinforced concrete pipe, Class III, conforming to Sections 530 and 850 NCDOT Specifications. Joints for storm drainage piping shall be factory made compression joints, conforming to ASTM Specification C-443.

5. PVC Pipe -

Ribbed PVC Drainage Pipe

ULTRARIB PVC Gravity Storm Drain Pipe shall meet the requirements of ASTM F794, and shall be as manufactured by UPONOR ETI Co., or an approved equal.

Pipe shall have a smooth interior and manning flow coefficient of not less than 0.012.

Pipe shall have an Aimpact resistance@ and a Astiffness@ not less than required by AASHTO M304.

Joints for ULTRARIB PVC shall be slip on type with a rubber gasket meeting the requirements of ASTM F477.

Fittings as manufactured by the UPONOR ETI Co. Shall be used for correcting sections of piping system.

6. Concrete - See Division 3.

D. Trench Excavation, Bedding and Backfill for Drains

1. Trenching - Trenches for drain piping shall proceed along the lines and grades shown on the drawings. Width of trenches at any point below the centerline of the pipe shall not be greater than twelve inches (12"), plus the outside diameter of the pipe. Trench shall be sloped, braced, or sheeted sufficiently to prevent caving in of trench walls. Care shall be taken not to undercut desired bottom of pipe trench. In the event undercutting of the trench occurs, the Contractor shall provide structural backfill to bring trench bottom to its proper grade. Provide all pumping necessary for keeping trenches in a dry condition.

2. Removal of Unstable Materials - Where wet or otherwise unstable soil, incapable of properly supporting pipe is encountered, such

material shall be removed to depth required and replaced to the proper grade with structural fill material, and compacted as provided herein.

3. Bedding - The bedding surface for the pipe shall provide a firm foundation of uniform density throughout the entire length of the pipe. The pipe shall be bedded carefully in a soil foundation shaped to match the outside diameter of the pipe for a minimum of 25% of the height of the pipe laid flat. All pipe bedding shall be tamped. Bell holes and depressions for joint shall be only of such length, depth and width as required for properly making the particular type of joint.

4. Backfilling - After pipe has been placed in bedding and the pipe joints have been completed, selected material from excavation or borrow shall be placed along both sides of the pipe in layers not to exceed six inches (6") in depth. The Backfill shall be brought up evenly on both sides of the pipe for its full length, and shall be thoroughly compacted with hand or mechanical tampers. The Backfill and compaction effort shall be repeated to a minimum cover of twelve inches (12") lifts and compacting by hand or mechanical tampers. Trench Backfill shall be compacted to not less than 95% Standard Proctor Density (ASTM D-698).

E. Pipe Laying

1. Drain Piping shall be carefully laid to lines and grades indicated. Any pipe which is not true in alignment or which shows settlement after laying, shall be taken up and relaid at Contractor's Expense. Interior of pipes shall be kept clear of debris as work progresses. No pipe shall be laid which is cracked, checked, spalled or otherwise damaged or which in any way fails to meet requirements of these specifications and all such rejected pipe shall be immediately and permanently removed from the site. Laying of drain pipe shall be started at outlet ends and proceed upgrade.

2. When a section of drain pipe is installed and prior to backfilling, pipes shall be visually inspected internally by "flashing" with mirrors or by strong spotlight. Any evidence of poor alignment, settlement or leakage shall be corrected by Contractor.

3. Trench Excavation, Bedding and Backfill:

Trench excavation, bedding and backfill shall be in accordance with paragraph 2.4.

F. RCP and HDPE Installation

In addition to installing the pipes per the manufacturer=s specifications, each pipe joint shall be completely wrapped externally with a non-woven filter fabric. The fabric shall be tightly laid against the pipe and shall extend 2' on either side of joint. The fabric shall be overlapped a minimum of 12", with the seam located at the top of the pipe. The overlapped fabric shall be securely attached to each other by stitching the fabric or epoxy the fabric together. The fabric shall be AMOCO 4506 or approved equal.

02700 BASES, BALLASTS, PAVEMENTS & APPURTENANCE

A. Scope of Work:

The Contractor shall perform all necessary items of work to complete Paving and Surfacing as shown on the plans and specified herein.

B. Materials

1. Subgrade material shall be compacted “Select Structural Fill". Where existing subgrade is found to be "unsuitable" such material shall be removed to a depth of not less than one foot (1') and replaced with soils equal to "Select Structural Fill".

2. Base Course - Asphalt paved areas shall receive a base course of "Aggregate Stone” in accordance with NCDOT Standard Specification. Base courses shall be placed and compacted to a minimum thickness as indicated on the contract documents. These base courses shall be placed on a prepared subgrade.

3. Bituminous Binder Course shall be “Bituminous Concrete Binder Layer” in accordance with NCDOT Standard Specification. A minimum Marshall Stability of 1400 psi shall be required. Place binder layer to the thickness shown on the plans.

4. Bituminous Wearing Surface Pavement - shall be "Bituminous Concrete Wearing Surface" in accordance with NCDOT Standard Specification. The job mix shall have a Marshall stability of not less than 1600 pounds and shall be placed to a thickness as shown on the plans.

5. Concrete paving, curbs and sidewalks shall be as indicated on the drawings and in accordance with Division 3 Concrete.

6. Paint Striping and marking shall be paint (Class I) Reflective (Type A) materials. Traffic marking materials shall meet the material requirements of NCDOT Standard Specification. Construction requirements for the striping and markings shall be in accordance with NCDOT Standard Specification entitled "Traffic Stripe" and "Traffic Control Markings and Legends", respectively.

C. Construction Requirements

Construction requirements, including placement methods and compaction shall conform to the requirements of NCDOT Standard Specification.

02810 IRRIGATION SYSTEM

A. The Contractor shall design, furnish and install a complete irrigation system and controls.

B. This Contractor shall furnish and install the irrigation tap, meter and all PVC, Schedule 40, sleeves under walkways and roadways, where shown on the plans. Sleeves shall extend 3 feet beyond pavement.

C. Materials for sleeves shall be Schedule 40 PVC, Glue Joint Pipe & Couplings. Sleeves shall be 4 inch diameter. All sleeves shall have removable plugs at each end for removal by Owner.

D. Irrigation sleeves shall have 18 inches to 24 inches of cover to finish grade.

E. Sleeves shall be installed in the same manner as specified for storm drain piping.

F. The Control System shall be located inside the building at the main electrical panel and shall be housed in a lockable assembly.

02870 LITTER RECEPACLES

A. SCOPE OF WORK

Includes installing 2 Litter Receptacles to be provided by Dollar Tree as specified. See plans for exact location of installation.

B. MATERIALS

All materials will be ordered by Dollar Tree for contractor installation.

C. INSTALLATION

Receptacles shall be anchored into the sidewalk with 3/4” anchor bolts. Anchor bolts shall be set in epoxy with 3” minimum embed into concrete.

02890 TEMPORARY SITE SIGNAGE

A. SCOPE OF WORK

Includes constructing & installing a frame for a 4' high x8' wide "Dollar Tree Coming Soon" sign on a portable wood frame sled. Sign will be provided by Dollar Tree for contractor installation.

B. MATERIALS

Frame shall be constructed of PT 2x4s & 1/2" treated plywood. 4'x8' opening shall be clad with plywood for anchoring of banner. All framing material shall be screwed for disassembly.

C. INSTALLATION

Sign shall be installed on frame by contractor. Sign & frame shall be maintained in good condition for the duration of construction and set in a location that maximizes visibility. Sign & frame shall be removed at completion of project and upon store opening at store manager's approval.

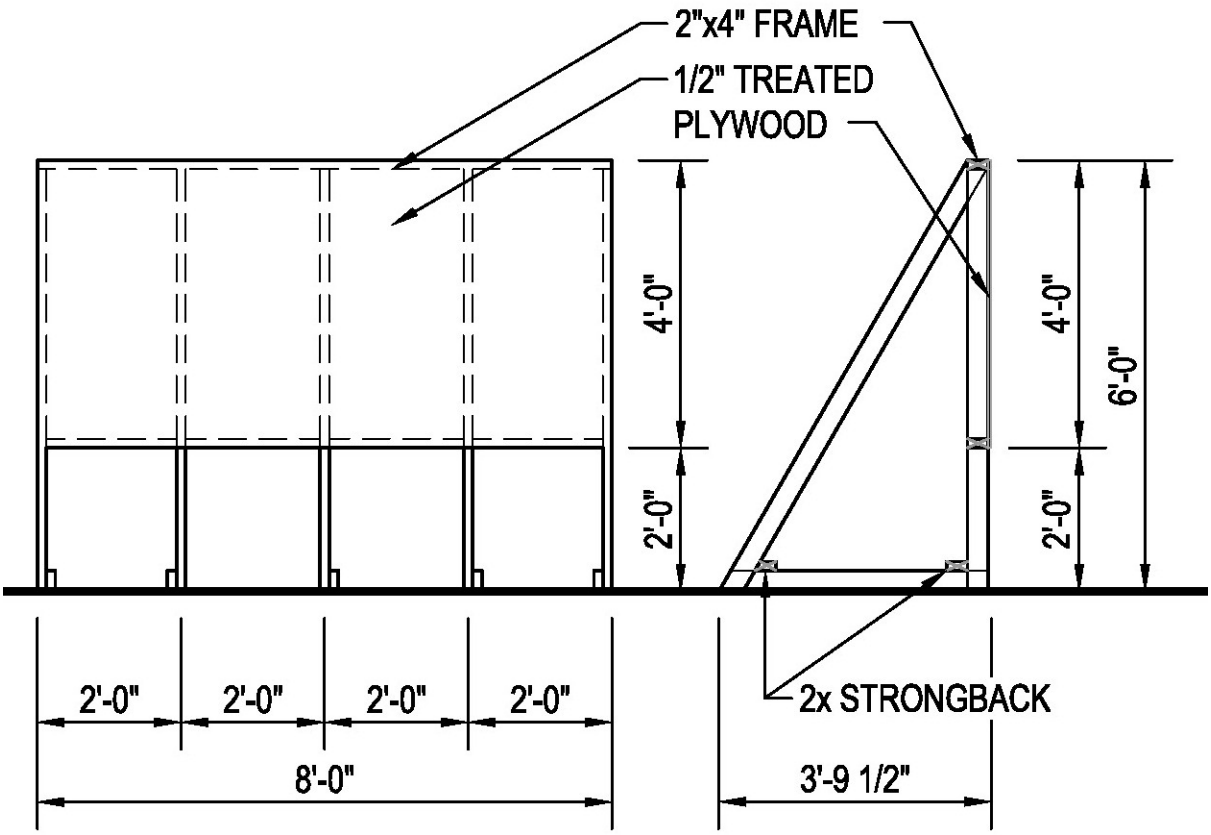

02900 PLANTING

A. Scope of Work

The work covered by this section includes furnishing all labor, material and equipment and incidentals necessary for grassing and soil preparation within the limits shown on the drawings. All disturbed areas shall be solid sod. Temporary stabilization may be seeded and mulched.

B. Material

1. Topsoil - The Contractor shall place topsoil over the area to be grassed or landscaped. Topsoil shall be the best available soils from the stockpile on the project site. Material shall be free from roots or other materials which may be harmful to plant growth. The areas to receive topsoil shall first be brought to approximate grade and line and shall be approved prior to commencement of the top soiling operations. Where insufficient topsoil is not available provide an approved topsoil from off-site. Topsoil shall be 2 inch minimum thickness.

2. Solid Sod

   Provide strongly rooted sod, inspected and found free of diseases, not less than two (2) years old and free of weeds and undesirable native grasses.

   a. Provide only sod capable of growth and development when planted (viable, not dormant).

   b. Sod shall be machine cut at a uniform minimum soil thickness of 5/8" at the time of cutting. Measurement for thickness shall exclude top growth and thatch. Thatch shall be a maximum of 1/2", uncompressed.

   c. Individual pieces of sod shall be cut to the supplier's standard width and length. Broken pads, torn pads, or pads with uneven ends shall not be acceptable.

3. Seed - All seed used shall be labeled in accordance with U.S. Department of Agriculture Rules and Regulations under the Federal Seed Act in effect on the date of Invitation for Bids. All seed shall be furnished in sealed standard containers, unless exception is granted in writing by the Engineer/Architect. Seed which have become wet, moldy, or otherwise damaged in transit or in storage will not be acceptable. Seed shall conform to the requirements of Federal Specification JJJ-S-181. Type of seed shall be Common to the area at a rate of 30 lbs. per acre, unhulled.

4. Lime - Lime shall be ground agricultural lime-stone containing not less than 85% of total carbonates and shall be ground to such fineness that at least 50% will pass through a 100-mesh sieve and at least 90% will pass through a 20-mesh sieve. Coarser material will be acceptable provided the specified rate of application are increased proportionately, on the basis of

quantities passing the 100-mesh sieve, but no additional payment will be made for the increased quantity. Apply loose at the rate of 2000 lbs. per acre.

5. Water - Water shall be free from oil, acid, alkali, salt and other substances harmful to growth of grass. The source shall be subject to the approval of the Engineer prior to use.

6. Fertilizer - Initial Application of fertilizer shall be 8-8-8, uniform in composition, free-flowing and suitable for application with approved equipment, delivered to the site in bags or other convenient containers, each fully labeled, conforming to the applicable State Fertilizer Laws, and bearing the name, trade name or trademark, and warranty of the producer. Apply fertilizer at the rate of 1,000 lbs. per acre.

7. Mulch - Mulch shall be hay, straw, or approved biodegradable netting.

8. Water and maintain sod and seed areas until completion of the project.

DIVISION 3 CONCRETE

03050 BASIC CONCRETE MATERIALS & METHODS

1.1 Scope of Work:

The work under this section shall include furnishing all labor, materials, equipment and incidentals necessary to do concrete and cement finish work shown on the plans or as specified.

1.2 Materials:

A. Portland Cement - All cement used shall conform to the latest ASTM Specification C-150, Type l. Only one (1) brand of Portland Cement shall be used in any one structure.

B. Concrete Aggregates - Concrete aggregates shall be sand and gravel, conforming to "Standard Specifications for Concrete Aggregates", ASTM Serial Designation C-33, latest edition.

The gradation from any one source shall be reasonably uniform and not subject to extreme percentages of gradation specified. For the purpose of determining the degree of uniformity, a Fineness Modulus determination shall be made upon representative samples submitted from such sources as is proposed to be used. Fine aggregates having a variation in Fineness Modulus greater than 0.20 either way from the Fineness Modulus of the representative sample submitted, may be rejected or may be accepted subject to such changes in proportions used as may be directed.

The mortar strength under Paragraph 4, of ASTM C-33 shall be 100%. The gradation of coarse aggregates shall be as shown in Table 11, ASTM C-33. Coarse aggregates shall be graded in accordance with Table II of ASTM C-33 and the following:

1. Class "A" Concrete - Size No. 57 (1" to No. 4)
   Class “B” Concrete - 5/8" to No. 4

2. The Contractor shall submit, for approval, gradations and other physical characteristics of aggregates to show conformity with the above requirements.

C. Admixtures -

1. Air Entraining Admixtures shall meet the requirements of ASTM C-260

2. Water Reducing Admixtures, if used, shall be Pozzolith Type 200N, or an approved equal, meeting the requirements of ASTM C494M.

3. Set Retarding Agent, if used, shall be Pozzolith Type 100R, or an approved equal, meeting the requirements of ASTM C494M.

4. Flyash, if used, shall be Type C, meeting ASTM C618. Flyash will not be allowed in Class B Concrete.

D. Reinforcing Steel shall conform to ASTM Specification A-615, Grade 60 or better.

Field inspection for section, rust, shape and dimensions will be required.

E. Wire Mesh - Wire fabric shall conform to ASTM Specification A-185. Field inspection for dimensions, spacing, size of wire and rust will be required.

F. Tie Wire for securing steel reinforcement shall be #18 black annealed.

G. Forms -

1. Unexposed Surfaces shall have forms of #2 common (or better) lumber.

2. Exposed Surfaces designated as a smooth finish shall have plywood forms or form lining of #1 common, dressed, matched boards, uniform in thickness and of such quality as to produce good surfaces or such steel forms as may be approved.

a. Plywood Forms shall be at least 5/8 inch thick, not less than 5-ply.

b. Form Lining may be either of the following:

Fiber Board, Federal Specification LLL-H-35, Type I, Class 3, 3/15 inch thick, no less, or exterior plywood, 3-ply, 1/4 inch thick, not less.

H. Water shall be clean, fresh and free from alkali, acids, vegetable, sewage, organic or other deleterious matter.

I. Form Oil shall be a non-staining mineral oil.

J. Waterproof Building Paper, Federal Specification UU-B-790.

K. Form Lacquer shall be of a type specially prepared for the purpose and shall not stain or injure the concrete.

L. Premolded Expansion Joint Material shall conform to ASTM Specification for "Preformed Expansion Joint Fillers for Concrete Paving and Structural Construction", ASTM Designation D-1751, latest edition.

M. Control Joint Sealant shall be a traffic bearing, (pour grade), one component, self leveling sealant, Fed. Spec. TT-S-00230C. Class A, Type I. Install in all interior horizontal control joints. Submit sample for approval.

N. Waterstop shall be polyvinylchloride (PVC) serrated 6" wide center bulb type, ASTM D-638, D-792, D-747 & D-624. Waterstops shall be welded at joints for profile continuity and not overlapped. Splices at corners shall be factory made.

O. Vapor Barrier

1. Material - Vapor barrier shall be 10 mil Stego Wrap by Stego Industries or equal.

2. Application - Sheeting shall be placed under all interior slabs on ground. Sheeting shall be lapped 6" minimum. All punctures and joints (laps) shall be taped. All sheeting shall be new, (not previously used).

03210 REINFORCING STEEL

1.1 Placing and shop detail drawings for reinforcing shall be furnished for approval. Reinforcement of size and shape shown shall be placed accurately where indicated on drawings or required to carry out intent of drawings and specifications.

1.2 Bars shall be cleaned of loose rust, scale or coatings. Steel shall not be bent or straightened in an injurious manner. Bars with kinks or bends, not shown, shall be discarded. Bars shall be ASTM A-615, deformed bars, Grade 60. Wire mesh shall be ASTM A-185.

1.3 Reinforcement shall be spliced where shown on plans. Splices in adjacent bars shall be staggered. Provide Class “B” Lap splices for all reinforcement as required by ACI 318 and all cases, splices shall be sufficient to transfer stress by bond. No lap shall be less than twelve inches (12"). Provide corner bars at all corners.

1.4 Reinforcement shall be securely tied at intersections with #18 annealed wire and be carried on spacers or chairs of sufficient weight and number to properly support same. Welding of reinforcing steel shall not be permitted. Heating of bars for field bending shall not be permitted.

1.5 Concrete covering over steel shall be in accordance with Paragraph 7.7.1 of ACI 318, unless otherwise shown.

1.6 Footing reinforcements shall be supported on precast concrete blocks. Reinforcement in masonry units shall be supported with wire ties. Provide corner bars with proper laps.

03310 STRUCTURAL CONCRETE

PART 1 - MATERIALS

1.1 Measurement:

All materials shall be measured by weighing and the apparatus for determining weights shall be suitably designed and constructed for the purpose. Fine aggregate, coarse aggregate and cement shall be weighed separately, except sack cement shall be considered one (1) cubic foot per sack (94#) and need not be weighted. Weighing devices shall be accurate to within one-half of one percent. Water may be measured by weight or volume and measuring device shall be accurate to within one (1) quart.

1.2 Properties of Concrete:

All concrete placed under this contract shall meet all of the requirements hereinafter specified.

Class	Maximum Water Per Bag Cement (Gallons)	Min. Cement Per Cu. Yd. (bags)	Min. Compressive Strength in 28 Days (PSI)	Range in Slump
A	5.5	5.5	3,000	3"-5"
B	7.5	6.0	3,000	5"-7"

Class “A” Concrete shall be used for foundation work and all other concrete in this project.

Class “B” Concrete shall be used in CMU filled cells.

1.3 Admixtures:

A. All Class "A" Concrete shall not be air-entrained concrete. Total natural air content shall not exceed 3.0 percent, plus or minus 0.5 percent. Air entraining admixtures shall not be used.

B. All Class "B" Concrete shall have a set retardant added. If a set retardant is added to the mix, water reducing agent shall not be added.

C. Water reducing admixtures as specified may be used at the Contractors option. Application rates shall be in accordance with the manufacturer's written recommendations, but shall not be greater than eight (8) ounces per sack of cement. Water reducing admixtures shall not replace any of the specific minimum cement content.

D. Class C Flyash may be used to replace not more than fifteen percent (15%) of the specified cement content except as noted below.

E. Integrally colored concrete shall NOT have fly ash used to replace cement.

1.4 Ready Mixed Concrete

A. Ready mixed concrete shall be used in lieu of concrete mixed at the job. Ready mixed concrete shall be in conformance with the latest ASTM Specification C-94.

B. All mixing requirements herein specified for concrete mixed at the site shall be in force, and the Engineer shall have free access to the mixing plant at all times.

C. Concrete shall not be transported or used in any case after addition of cement, if elapse time exceeds the following:

Class "A" Concrete - 1.5 hours
Class “B” Concrete - 1.5 hours

D. The organization supplying ready mixed concrete shall have a plant of sufficient capacity and transportation facilities to assure continuous delivery at the rate required.

PART 2 – QUALITY CONTROL & TESTING

2.1 A testing laboratory shall be selected and paid for by the Owner to design the mixes of concrete to be used on the project, and to test and control the project concrete during the placement. Copies of all mix designs and the results of all test shall be furnished in triplicate to the Engineer.

2.2 The Contractor shall furnish to the designated testing laboratory samples of the materials to be used on the project, in quantities of at least one cubic foot each, to determine mix design. The laboratory shall be approved by the Owner.

2.3 The following shall be the minimum requirements of operations to be performed by the Testing Laboratory:

A. Check the mix; submit reports of design mixes.

B. Check ready mix plant for compliance with design mix and material requirements.

C. Perform at least two (2) slump tests and prepare at least one (1) set of four (4) compression cylinders from each days pour and for each 50 cu. yd. or increment thereof during days operations. All above operations shall be performed in accordance with the applicable ASTM Specifications C-31 and C-39.

D. Cylinders shall be broken as follows:

1. One (1) at seven (7) days age.
2. Two (2) at twenty-eight (28) days age.
3. If the 28 day breaks are good, the fourth cylinder may be discarded. If the 28 day breaks are deficient the fourth cylinder shall be broken as instructed.

E. Reports of all tests and control measures shall be submitted to the Engineer in duplicate. Reports shall show the in-place location of the concrete.

2.4 If cylinder breaks show concrete to be of deficient strength, one or more of the following shall be performed:

A. Impact (Swiss) hammer tests.

B. Take in place cores and test as per ASTM C-24.

C. Load test actual structure as per ACI 318.

D. Remove portion(s) of structure in question and reconstruct in accordance with plans and specifications.

2.5 Application References

The following Specification Standards and Publications form a part of this Division and shall be applicable where those specifications do not provide specific direction.

A. ACI STANDARD 318 - "Building Code Requirements for Reinforced Concrete".

B. ACI STANDARD 301 - "Specifications for Structural Concrete for Building".

F. ACI STANDARD 302 - “Guide for Concrete Flood and Slab Construction”.

G. ACI STANDARD 224 - “ Joints with Concrete Construction”.

H. ACI STANDARD 305 – “Hot Weather Concreting”.

I. ACI STANDARD 306 - “ Cold Weather Concreting”.

03313 FOUNDATIONS

1.1 General

The bottom of excavations shall be properly compacted as specified and leveled before receiving concrete. Footings and/or floors shall be poured monolithically, unless otherwise shown.

1.2 Footings - All footings shall be placed on soil which is properly leveled, compacted and wetted as specified. All footings shall be poured monolithically, unless otherwise shown or specified.

1.3 Slabs - All slabs on grade shall be placed on vapor barrier over compacted soil as indicated on the drawings or specified. The ground surface shall be properly graded.

1.4 Removal of Water

Water shall be removed from excavations before concrete is deposited. Any flow of water shall be diverted through proper side drains to a sump or be removed by other approved methods which will avoid washing freshly deposited concrete. Temporary drains shall be filled by grouting or otherwise.

1.5 Inspection

All excavations, forms and reinforcements shall be inspected and approved before concrete is placed and if found unsatisfactory, the work will not proceed until all defects have been remedied. Approval will in no way relieve the Contractor his obligation to produce the finished concrete required by the drawings and specifications.

03316 PLACING CONCRETE

1.1 Concrete shall be handled from mixer to place of final deposit in a continuous manner, as rapidly as practicable, by methods which will prevent the separation or loss of ingredients. Under no circumstances shall concrete that has partly hardened be deposited in the work.

1.2 Care shall be exercised to prevent splashing forms or reinforcement. Any hardened or partially hardened concrete already in place must be removed before the work proceeds.

1.3 Concrete shall not be placed on concrete which has hardened sufficiently to cause formation of seams and planes of weakness within the section.

1.4 Concrete shall not be carried or conveyed in or through any aluminum items.

1.5 Concrete, as soon as deposited, shall be spaded and worked into corners and around reinforcements. It shall be deposited in the forms as nearly as practicable in its final position to avoid rehandling. High frequency vibrators shall be used inside the form to properly consolidate the mix at the time of placing. Vibrators of an approved type shall be used, and care shall be exercised by the Contractor to prevent any displacement of forms or reinforcing. The concrete mixture shall be worked into all corners and around all reinforcement and inserts. Tapping or external vibration of forms will not be permitted. Satisfactory runways or other means must be provided to convey the concrete to the place of deposit in order not to disturb forms or reinforcement. Runways shall not be supported on reinforcement. Running wheelbarrows directly over reinforcement will not be permitted.

A. Placing in Cold Weather:

Concrete shall only be mixed and placed when temperature is at least 40 degrees and rising.

Suitable means shall be provided for maintaining concrete at an temperature of at least 50 F. for a period of seven (7) days after placing. The method of heating materials and protecting concrete shall be subject to approval. Salt, chemicals or other foreign materials shall not be mixed with the concrete for the purpose of preventing freezing.

B. Placing by Chute:

When concrete is conveyed by chutes, the plant and equipment shall be of such size and design as to insure a practically continuous flow in the chute. The chute shall be of metal or metal lined, and the different portions shall have approximately the same slope. The slope shall not be less than one vertical to three horizontal and not more than one vertical to two horizontal, and shall be such as to prevent the segregation of the ingredients of the concrete.

The discharge end of the chute shall be provided with a baffle plate to prevent segregation. If the height of discharge end of the chute is more than three (3) times the thickness of the layer being deposited, but not more than five feet (5') above the surface of the concrete in the forms, a spout shall be used, and the lower end maintained as near the surface of deposit as practicable. When the operation is intermittent, the chute shall discharge into a hopper. The chute shall be thoroughly cleaned before and after each run and the debris and any water shall be discharged outside the forms.

C. Placing by Pumping:

Where concrete is indicated as being placed by pumping, the plant, equipment and mix shall be approved by the Engineer. The pumping operation shall be such that a continuous stream of concrete without separation of ingredients and without air pockets is being produced. Concrete shall not be handled or pumped in or through any aluminum containers or conduits.

03317 CONSTRUCTION JOINTS

1.1 Concrete shall be placed continuously so that each unit will be monolithic in construction. At least 24 hours shall elapse between the pouring of adjoining units unless otherwise specified.

1.2 Joints not shown or specified shall be so located as to least impair the strength and appearance of the work.

1.3 Concrete slabs shall be poured in a continuous manner and saw-cut to the depth and pattern as shown on the plans within 24 hours of pour.

03318 BONDING

Before depositing new concrete on or against concrete which has set, existing surfaces shall be throughly roughened and cleaned of all foreign matter and laitance. Forms shall be retightened and existing surface flushed with a neat coat of bonding agent. New concrete shall be placed before bonding agent has attained initial set. Work shall be performed in a manner assuring complete bonding of new and existing work. Contractor shall submit bonding agent for approval.

Bonding steel reinforcing anchor dowel shall be installed in accordance with manufactures recommendations and requirements. Minimum depth embedment shall be fifteen (15) bar diameters. Bonding adhesive shall be CONCRESIVE 1490 by Degussa/Master Builders or an approved equal.

03319 REMOVAL OF FORMS

1.1 Forms shall not be disturbed until concrete has adequately hardened. Shoring shall not be removed until supported members have acquired sufficient strength to safely support their weight and the imposed load.

1.2 Care shall be exercised to avoid spalling concrete surfaces.

1.3 Under normal conditions, the minimum period elapsing before forms may be stripped shall be governed by the following schedule, but its use shall not operate to relieve the Contractor of responsibility for safety of structure.

A. Side Forms Footings & Beams 1 Day
Side Forms Piers, Columns & Walls 3 Days

B. Wood forms shall be completely removed in order that no material will be left for termite infestation.

C. NOTE: When temperature below 40 F occurs, supports shall remain in place an additional time equal to period structure has been exposed to low temperatures.

03330 ARCHITECTURAL CONCRETE

1.1 Materials

A. Colored concrete materials shall be by Solomon Colors, P. O. Box 8288, Springfield, Illinois 62791. Phone Number: 800-624-0261 Website: www.solomoncolors.com.

B. Color pigment shall be Liquid Iron Oxide pigments SGS Color-Flo Liquid Type "Solomon 242 Sahara" in accordance with ASTM C979, Fineness range of 95 to 99 percent minus 325 mesh with a specific gravity of 1.9 to 2.0.

1. Colored additives shall contain pure, concentrated mineral pigments specially processed for mixing into concrete.

2. Color additive shall be mixed at the plant not the site.

3. Do not use calcium chloride. This product can cause discoloration.

C. Joint sealant shall be submitted for approval prior to installation. Sealant shall be colored to match final in-place slab color.

D. Dosage rate of color additive pigment shall not exceed 4 percent of weight of cementitious material in mix.

1. Coordinate color mix design with concrete mix/slump and intended use of admixtures.
2. Mix in accordance with manufacturer's instructions. Mix until color additives are uniformly dispersed throughout mixture. Do not retemper mix by adding water in field. Refer to Solomon Colors Technical Specifications additional information and recommendations.

1.2 Curing

A. Curing compound shall comply with ASTM C309 and be approved by the color additive manufacturer for use with colored concrete.

B. Use of a non yellowing UV-Stable Acrylic Cure. Do not cover or wet cure colored surface.

C. Apply curing compound in accordance with manufacturer's instruction. Apply at a consistent rate and time for each pour to maintain close color consistency.

1.3 Floor Finish

A. Trowel: Use steel trowel to produce smooth dense surfaces. Do not over-trowel or start troweling late.

B. Over troweling or starting to trowel late may produce discolored burns or dark spots.

1.4 Cleaning

A. Cleaning agents shall be products known to be compatible with colored concrete.

B. Do not use Muriatic (Hydrochloride) Acid on colored concrete.

1.5 Patching Block-Outs

A. Make patches with a stiff mortar made with material from same sources as the concrete. Adjust mortar mix proportions so dry patch matches dry adjacent concrete. Add white cement to mortar mix is necessary to lighten mix.

1.6 Submittals

A. Submit product data and manufacturer's instructions for:

1. Color Additives
2. Curing Compounds
3. Joint Sealants
4. Proprietary Cleaning Agents
5. Surface Retarders

1.7 Quality Assurance

A. Perform work in accordance with ACI 301 Section 6 – Architectural Concrete.

B. Refer to Section 03330 Concrete Quality Control and Testing for added requirements.

03350 FINISHING

The type of finish for the various parts of the work, unless otherwise noted on the drawings, shall be as follows:

A. Curbs: Rubbed Finish.

B. Walks: Broom Finish.

C. Slabs

The slab shall be brought to a true and even finish by power or wooden hand floating. Variation in grade shall be not more than 3/16 inch in any ten feet (10'). No floating or troweling of finish shall be performed while material is wet or sloppy. Finish shall be delayed after screeding until all surface water has disappeared (not more than 30 to 45 minutes) and in no instance shall slabs be “dusted” with neat cement or cement and sand to speed time of finishing.

Final finish of slabs shall be:

1. Exposed interior slabs shall be machine troweled.

2. Exterior concrete walks and slabs shall be given a light to medium broomed finish to provide a slip resistant surface. Ramps shall receive a rough texture finish. Submit actual samples for approval, 12" x 12" size or larger.

D. Imperfect or Damaged Work

1. Imperfect or damaged work, or any material damaged before final acceptance, shall be satisfactorily replaced by the Contractor in accordance with requirements of the drawings and specifications.

2. Removal and/or replacement of concrete work shall be done in such manner that strength will not be impaired.

03390 CURING

1.1 Curing shall be accomplished by preventing loss of moisture, rapid temperature change and mechanical injury or injury from rain or flowing water, for a period of seven (7) days. Curing shall be started as soon as free water has disappeared from the surface of the concrete after placing and finishing. Curing may be accomplished by any of the following method:

1.2 Moist Curing:

Unformed surfaces shall be covered with burlap, cotton or other approved fabric mats kepts in intimate contact with the surface or with sand, and shall be kept continually wet. Where formed surfaces are cured in the forms, the forms shall be kept continually wet. If the forms are removed before the end of the curing period, curing shall be continued as on unformed surfaces, using suitable materials. Burlap shall be in two (2) layers.

Integrally colored concrete shall NOT be moist cured.

1.3. Membrane Forming Curing: Curing compound shall conform to ATM C-309 and shall be applied by power spraying equipment using a spray nozzle equipped with a wind guard. The compound shall be applied in a two-coat continuous operation at coverage of not more than 200 square feet per gallon for each coat. Second coat shall be applied transverse to the original first coat. The compound shall form uniform, continuous, adherent film and shall not check, crack, or peel and shall be free from pinholes or other imperfections. Surfaces subjected to heavy rainfall within three (3) hours after compound has been applied, or surfaces damaged by subsequent construction operations within the curing period shall be re-sprayed at the rate specified above. Where membrane forming compounds are permitted, permanently exposed surfaces shall be cured by use of a clear-type membrane forming curing compound containing a fugitive dye. Surfaces coated with curing compound shall be kept free of foot and vehicular traffic and other sources of abrasion during the curing period unless curing compound is protected from abrasion.

1.4. Polyethylene Sheeting and Polyethylene Coated-Waterproof Paper and Burlap: Surfaces shall be completely covered. Where a single sheet does not cover the entire surface, the ends and edges shall lapped not less than four inches (4”), and sealed with adhesive tape conforming to the Federal Specification PPP-T-60; Type III, Class I. Edges shall be securely attached to form and/or secured to prevent movement due to winds.

Integrally colored concrete shall NOT be cured with sheeting.

03910 CLEANING

1.1 Upon completion of work, forms, equipment, protective covering and rubbish resulting therefrom shall be removed from premises.

1.2 Finished concrete surfaces shall be left in a clean condition.

Finished concrete curbs and drainage structures shall be swept with an ordinary broom to remove loose dirt and left to a satisfactory manner.

DIVISION 4 MASONRY

04220 CONCRETE MASONRY UNIT

A. Scope of Work:

The work covered by this division of these specifications includes furnishing all plant, labor, equipment, materials and incidentals to complete the masonry work as shown on the drawings or specified herein. In addition to certificates required in Paragraph C, submit samples of masonry units, anchors, reinforcing, control joints and reglets.

B. Materials:

1. Concrete Masonry Units (CMU) shall conform to the requirements of ASTM Specification for Load Bearing Units, medium weight block.

   Minimum Compressive Strength shall be f'm = 2,000 psi.

2. Masonry Cement: ASTM C-91, furnished in bags containing one (1) cubic foot each, marked with weight and shall be products of Holnam, Atlas, Longview, or approved equal.

3. Mortar shall conform to the requirements of ASTM C-270, be freshly prepared and uniformly mixed and shall meet the requirements for Type "M" mortar per the International Building Code for CMU.

4. Vertical Reinforcing Steel shall be deformed bars conforming to ASTM Designation A-615, Grade 60.

5. Horizontal Reinforcement shall be Dur-O-Wall truss reinforcement for single wythe walls with #9 side rods and #9 gage truss wires. Reinforcement shall be galvanized and conform to requirements of ASTM Designation A-153.

   Equal manufacturers include Wire-Bond, Hohmann & Barnard.

6. Column Anchors shall be fabricated bar type as detailed on the plans and shall be galvanized in accordance with ASTM Designation A-153. Refer to drawings for other types.

7. Refer to drawings for other anchor devices. All anchors shall be galvanized, ASTM A-153.

8. Control Joints for masonry units shall be Hohmann & Barnard RS-Standard rubber control joint.

C. Certification:

1. Prior to delivery of masonry units to the job site, the Contractor shall provide to the Owner, a letter from the manufacturer of the masonry units that all such items are within the requirements of these specifications.

2. Certification shall show results of tests made not more than twelve (12) months prior to delivery of concrete masonry units to the job site, shall show compliance with the specified ratings and values, and shall certify that the mix design, yield per batch, and curing procedures for the units delivered to the job site are equal to those submitted for the test.

D. Storage and Handling:

Concrete masonry units shall be stored in a location off the ground covered at all times and protected from the weather. Concrete masonry units shall be so stacked to allow free circulation of air to all units. Concrete masonry units shall be laid in wall as soon as possible.

E. Installation:

1. Cold-Weather Installation - No frozen work shall be built upon. If the Contractor chooses to erect masonry during temperatures below 40 degrees F, he shall submit a written statement for approval of methods he proposes to utilize to heat masonry materials and to prevent freezing of freshly placed masonry prior to laying units.

2. Laying Concrete Masonry Units - Masonry units shall be set to line, level, plumb and true. Ends of units shall be full buttered with mortar and shall be fully bedded in the mortar. Masonry units shall be layed in running bond pattern having a minimum joint thickness of 3/8 inch. Lintel bond beams and tie columns shall be filled with concrete and required reinforcement and located as shown on the plans. Tool all joints concave. Joints shall be laid in "running" bond except as otherwise noted. Reinforcement shall be wire tied to hold rods in correct positions. Note that all split face block exposed surfaces shall be split faces. Special order blocks or cut blocks in field to obtain smooth face surface where storefront glass or doors abut split face block.

3. Control Joints shall be installed where shown with masonry reinforcement interrupted but reinforcing horizontal rods shall be continuous thru the joint.

4. Use only sound masonry units free from cracks, chipped edges and corners and other defects. Exposed units shall have even textured faces without slicks or other surface imperfections.

5. Masonry Reinforcement -

   A. Horizontal masonry reinforcement shall be placed at the first masonry joint and be placed every other course therefrom. In shear walls, reinforcement shall be at 8" o.c. Fill shear walls with concrete. Reinforcement shall be continuous, with side bars being lapped a minimum of six (6") inches. Corner reinforcement sections shall be provided for intersections of and at change of direction of walls.

   B. Column Anchors - When concrete masonry passes a structural steel column, install column anchors in same course as the horizontal reinforcement for the full height of wall welded to columns.

6. Pointing and Cleaning - Mortar splashes and daubs shall be removed from all exposed masonry units. All defective joints shall be raked out as necessary and re-filled with mortar to match adjacent joints. Masonry surfaces shall not be cleaned until mortar joints have hardened, but shall be dry brushed after each day's operations to remove excess mortar. Metal tools or brushes shall not be used for cleaning. Masonry surfaces shall be left clean, neatly pointed, free of scum and debris, with tight joints throughout. Do not clean masonry with high pressure driven power machines.

7. Other Materials - The Contractor shall set and build in all materials furnished under other headings, such as miscellaneous metals, anchors and other accessories required to complete the work. He shall build around steel and concrete work, doors, frames and take care to see that all such are left in good condition.

8. Head and Bed Joints shall be of such thickness as required to give even joints maintaining the number of courses shown on the plans. In no case shall any bed joint, in either be more than one-half inch. All head joints to be 3/8" unless otherwise shown. All head joints must be full with no “bugholes

9. After mortar is "thumb print" hard, finish CMU joints with concave (unless shown otherwise) pointing tool, using sufficient

pressure to compact mortar and provide smoothly concave finished joint with mortar in positive contact with brick.

10. MASONRY WORK SHALL BE REJECTED IF WALLS ARE NOT PLUMB OR ALL BED JOINTS, HEAD JOINTS, AND ALL OTHER JOINTS ARE NOT COMPLETELY FILLED WITH MORTAR, IF HEAD JOINTS ARE OUT OF VERTICAL ALIGNMENT.

11. Use dry saw blade to cut CMU.

12. Lintels shall be required over all openings in CMU walls whether specifically indicated or not. Build in lintels as work progresses. All lintels shall be hot dipped galvanized.

13. Unfinished Work shall be stepped back for joining with new work; do no toothing unless specifically approved. Remove loose mortar, clean exposed joints before laying new work.

14. Protection: Protect masonry surfaces at all times while not being worked on; when rain or snow is imminent and/or work is discontinued cover tops of exposed masonry work with a strong waterproof membrane, secured in place. Consult portion of this section devoted to frost and freezing weather. Take precautions to protect against staining or discoloration of finished work.

15. Guarantee masonry work against leakage due to mortar shrinkage or pointing workmanship for a period of two (2) years. This guarantee shall run concurrently with the standard one (1) year guarantee.

16. Block Sealer – All exterior walls are to be treated with a sealer.

    a. Block sealer shall not be applied until the wall had dried out a minimum of 72 hours without rain and there is no visible sign of efflorescence on the wall.
    b. Exterior block walls shall be sealed only with Prime-A-Pell 200 Clear Sealer as manufactured by Chemprode of Garland, TX. Apply materials in accordance with manufactures printed instructions.
    c. Apply a second coat of sealer of masonry surfaces that are pourous.
    d. All windows must be covered and all cars removed before spraying as glass and finished metal can be damaged. Sealers are extremely hard if not impossible to remove from glass.

F. Cleaning

CMU's must be cleaned properly including mortar droppings, mortar splatters and efflorescence. Improper cleaning materials and/or methods will also harm water repellency.

1. DO NOT USE WATER PRESSURE OVER 50 PSI – Using high pressure will most likely cause efflorescence, streaking and color variation.

2. Use "Prosoco's Custom Masonry Cleaner" or equal to clean CMUs.

3. Consistent application of water and cleaner on the wall system will ensure consistent color after completion of cleaning – inconsistent application will cause color variation.

04720 CAST STONE

PART 1 - GENERAL

A. SCOPE OF WORK:

1. Extent of cast stone work is indicated on drawings.

2. Furnish inserts and reglets in time to be installed in concrete of masonry.

B. QUALITY ASSURANCE:

1. Subcontract fabrication of stone to a firm which has successfully fabricated stone similar to the quality specified for a period of not less than 5 years and is equipped to provide the quantity shown.

2. Approved Manufactuerers:

Building Solutions Inc.
459 Lloyd Rd.
Morton, MS 39117
601-732-3583
Color: Custom Buff

Willocks Brothers Co.
1021 Foch St.
Maryville, TN 37801
865-983-3971
Color: Light Buff (Custom Cast Stone)

Florida Architectural Precast
1252 NE 12th St.
Okechobee, FL 34972
863-824-2260
Color: Regular Buff – Acid Etch Texture

NOTE: Use of an approved manufacturer waves the requirement for a product data & color submittal. When using an approved manufacturer, cast stone must be of the color listed. Shop drawings are required for ALL manufacturers. Any contractor who intends to submit a bid using a manufacturer other than the approved manufacturers listed must submit for pre-qualification in writing seven (7) days prior to the bid date. Any contractor who fails to submit the product data & samples as requested will be subject to rejection.

C. SUBMITTALS

1. Product Data: Submit specifications and testing data for cast stone work required, including certification that each type complies with specified requirements. Include instructions for handling, storage, installation and protection of each type.

2. Samples: Contractor shall submit sets of samples not less than 3” x 3” x 1” in size of manufacturers range of earth tone colors. Include in each set full range of exposed color and texture to be expected in complete work. Architect will select color desired from those submitted. Architect reserves the right to reject manufacturer if product data/color samples are not satisfactory.

3. Shop Drawings: Submit cutting and setting drawings showing sizes, dimensions, sections and profiles of cast stone units, arrangement and provisions for jointing, anchoring and fastening, supports and other necessary details for lifting devices and reception of other work. Indicate location of each cast stone unit on setting drawings with number designation corresponding to number marked on each unit.

   a. Show location of inserts (for stone anchors and supports) which are to be built into concrete masonry.

D. PRODUCT DELIVERY, STORAGE, AND HANDLING

1. Protect cast stone during storage and construction against moisture, soiling, staining and physical damage.

2. Handle cast stone to prevent chipping, breakage, soiling or other damage. Do not use pinch or wrecking bars without protecting edges of stone with wood or other rigid materials. Lift with wide belt type slings wherever possible; do not use wire rope or ropes containing tar or other substances which might cause staining. If required, use wood rollers and provide cushion at end of wood slides.

3. Store cast stone on wood skids or pallets, covered with non-staining, waterproof membrane. Place and stack skids of cast stone to distribute weight evenly and to prevent breakage or cracking of cast stone. Protect stored cast stone from weather with waterproof, non-staining covers or enclosures, but allow air to circulate around cast stone.

4. Protect mortar materials and cast stone accessories from weather, moisture, and contamination with earth and other foreign materials.

E. JOB CONDITIONS

1. Installer must review installation procedures and coordination with other work, with Contractor, and other contractors and subcontractors whose work will be affected by cast stone work.

2. During all seasons, protect partially completed cast stone work against weather when work is not in progress.

PART 2 - PRODUCTS

A. CAST STONE:

1. Comply with ASTM C 1364.

2. Physical Properties: Provide the following:

a. Compressive Strength – ASTM C 1194: 6,500 psi minimum for products at 28 days.
b. Absorption – ASTM 1195: 6% maximum by the cold water method, or 10% maximum by the boiling method for products at 28 days.
c. Air Content – ASTM C 173 or C 231, for wet cast product shall be 4-8% for units exposed to freeze-thaw environments. Air entrainment is not required for VDT products.
d. Freeze-thaw – ASTM C 1364: The CPWL shall be less than 5% after 300 cycles of freezing and thawing.
e. Linear Shrinkage – ASTM C 426: Shrinkage shall not exceed 0.065%.

B. RAW MATERIALS:

1. Portland Cement – Type I or Type III, white and/or grey, ASTM C 150. Blended Cement – ASTM C595 or Hydraulic Cement ASTM C 1157.

2. Course Aggregates – Granite, quartz, or limestone, ASTM C33, except for gradation, and are optional for the VDT casting method.

3. Fine Aggregates – Manufactured or natural sands, ASTM C33, except for gradation.

4. Colors: Inorganic iron oxide pigments, ASTM C979 except that carbon black pigments shall not be used.

5. Admixtures – Comply with the following:

a. ASTM C 260 for air-entraining admixtures.
b. ASTM C 494/C 495M Type A – G for water reducing, retarding accelerating and high range admixtures.
c. Other admixtures: Integral water repellents and other chemicals, for which no ASTM Standard exists, shall be previously established as suitable for use in concrete by proven field performance or through laboratory testing.
d. ASTM C 618 mineral admixtures of dark and variable colors shall

not be used in surfaces intended to be exposed to view.

e. ASTM C 989 granulated blast furnace slag may be used to improved physical properties. Tests are required to verify these features.

6. Water – Potable.

7. Reinforcing Bars:
   a. ASTM A 615/A 615M: Grade 40 or 60 steel galvanized or epoxy coated when cover is less than 1.5 in.
   b. Welded Wire Fabric: ASTM A 185 where applicable for wet cast units.

8. Fiber reinforcement (optional): ASTM 1116.

9. All anchors, dowels and other anchoring devices and shims shall be standard building stone anchors commercially available in a non-corrosive material such as zinc plated, galvanized steel, brass, or stainless steel Type 302 or 304.

C. COLOR & FINISH:

1. All surfaces intended to be exposed to view shall have a fine-grained texture similar to natural stone, with no air voids in excess of 1/32 in. and the density of such voids shall be less than 3 occurrences per any 1 in^2 and not obvious under direct daylight illumination at a ft. distance.

2. Units shall exhibit a texture approximately equal to the approved sample when viewed under direct daylight illumination at a 10 ft. distance.

3. Minor chipping resulting from shipment and delivery shall not be grounds for rejection. Minor chips shall not be obvious under direct daylight illumination form a 20-ft. distance.

4. The occurrence of crazing or efflorescence shall not constitute a cause for rejection.

5. Remove cement film, if required, from exposed surfaces prior to packaging for shipment.

D. CURING:

1. Cure units in a warm curing chamber approximately 100°F (37.8^{o}C) at 95 percent relative humidity for approximately 12 hours, or cure in a 95 percent moist environment at a minimum 70°F (21.1^{o}C) for 16 hours after casting. Additional yard curing at 95 percent relative humidity shall be 350 degree-days (i.e. 7 days @ 50°F (10°C) or 5 days @ 570°F (21°C)) prior to shipping. Form cured units shall be protected from moisture evaporation with curing blankets or curing compounds after casting.

E. MANUFACTURING TOLERANCES:

1. Cross section dimensions shall not deviate by more than +/- 1/8 in from approved dimensions.

2. Length of units shall not deviate by more than length/ 360 of +/- 1/8 inc., whichever is greater, not to exceed +/- ¼ in.

   a. Maximum length of any unit shall not exceed 15 times the average thickness of such unit unless otherwise agreed by the manufacturer.

3. Warp, bow or twist of units shall not exceed length/ 360 or +/- 1/8 in., whichever is greater.

4. Location of dowel holes, anchor slots, flashing grooves, false joints and similar features – on formed sides of units, 1/8 in., on unformed sides of units, 3/8 in. maximum deviation.

F. PRODUCTION QUALITY CONTROL

1. Test compressive strength and absorption from specimens taken from every 500 cubic feet of product produced.

2. Perform tests in accordance ASTM C 1194 and C 1195.

3. Have tests performed by an independent testing laboratory every six months.

4. New and existing mix designs shall be tested for strength and absorption compliance prior to producing units.

5. Retain copies of all test reports for a minimum of two years.

PART 3 - EXECUTION

A. PREPARATION

1. Advise installer of other work about specific requirements relating to his placement of inserts and flashing reglets which are to be used by stone mason for anchoring and supporting and flashing of cast stone. Furnish installers of other work with drainings or templates showing location of inserts for stone anchors and supports.

2. Clean cast stone before setting by thoroughly scrubbing with fiber brushes followed by a thorough drenching with clear water. Use only mild cleaning compounds that contain no caustic or harsh fillers or abrasives. If not thoroughly wet at time of setting, drench or sponge cast

stone. Do not wet expansion or control joint surfaces. Installing contractor shall check Cast Stone materials for fit and finish prior to installation. Unacceptable units shall not be set

B. SETTING & TOLERANCES:

1. Setting:

a. Drench units with clean water prior to setting.
b. Fill dowel holes and anchor slots completely with mortar or non-shrink grout.
c. Set units in full bed of mortar, unless otherwise detailed.
d. Rake mortar joints ¾ in. in for pointing.
e. Remove excess mortar from unit faces immediately after setting.
f. Tuck point unit joints to a slight concave profile.

2. Tolerances:

a. Comply with Cast Stone Institute Technical Manual.
b. Set stones 1/8” or less, within the plane of adjacent units.
c. Joints, plus – 1/16 in, minum – 1/8 in.

C. JOINTING:

1. Joint Size:

a. At stone/brick joints 3/8 in.
b. At stone/stone joints in vertical position ¼ in. (3/8 in. optional)
c. Stones/stone joints exposed on top 3/8 in.

2. Joint Materials:

a. Mortar, Type N, ASTM C 270.
b. Use a full bed of mortar at all bed joints.
c. Flush vertical joints full with mortar.
d. Leave all joints with exposed tops or under relieving angles open for sealant.
e. Leave head joints in coping and projecting components open for sealant.

3. Location of Joints:

a. As shown on shop drawings.
b. At control and expansion joints unless otherwise shown.

D. JOINT PROTECTION

1. Comply with requirements of Section 07 90 00.

2. Prime ends of units, insert properly sized backing rod and install required sealant.

3. Ferrous metal: Where cast stone will contact ferrous metal surfaces which will be concealed in back-up costruction (anchors, supports, structural framing and similar surfaces), apply a heavy coat of bituminous paint on metal surfaces prior to setting of stone. Do not extend coating onto portions of ferrous metal which will be exposed in finished work. Do not apply coating to stainless or non-ferrous metals.

E. REPAIR & CLEANING

1. Repair chips with touchup materials furnished by manufacturer.

2. Saturate units to be cleaned prior to applying an approved masonry cleaner.

3. Consult with manufacturer for appropriate cleaners.

DIVISION 5 METALS

05100 STRUCTURAL METAL FRAMING

1.1 Scope of Work:

The work required consists of all structural steel, steel erection and related items necessary to complete the work shown on the drawings and/or specified herein.

1.2 Shop Drawings:

A. Shop Drawings for all work included in this section shall be prepared by the steel fabricators and four (4) copies submitted to the Engineer. Drawings shall be submitted and processed in accordance with requirements of Division 1 of these specifications. Approval of drawings shall be obtained prior to fabricating any material or proceeding with the work.

B. Shop Drawings shall include all information necessary for the fabrication of the component parts of the structure. They shall indicate size and weight of members, type and location of shop and field connections, the type, size and extent of all welds, and the welding sequence when required. The welding symbols used on the shop drawings shall be as adopted by the American Welding Society.

C. The Review of Shop Drawings by the Engineer will be for size and arrangement of principal and auxiliary members and for "design" requirements of the Contract Documents. Any errors in dimensions, quantities and/or details shown on shop drawings shall be the responsibility of the Contractor. The Contractor shall check and approve/disapprove shop drawings prior to submitting them to the Engineer. The shop drawings/data shall consist of dimensioned layouts and materials list for all reinforcing steel and structural steel; manufacturer's descriptive data, diagrams, specifications and performance data for all specialty items of equipment and other items specified. Shop drawings shall be reviewed by the Contractor before being submitted to the Engineer. Shop drawings shall be reviewed by the Engineer and returned to the Contractor prior to fabrication and/or placement of any items into the job. Review by the Engineer of shop drawings for any material, apparatus, devices, and layouts shall only be for compliance with the "Design" requirements of the Contract Documents and shall not relieve the Contractor from the responsibility of furnishing same of proper dimension, size quantity, quality and all

performance characteristics to efficiently perform the requirements and intent of the Contract Documents. Shop drawings review by the Engineer shall not relieve the Contractor from responsibility for errors of any sort on the shop drawings.

1.3 Design:

A. For structural steel, the rules and practices set forth in the latest edition of AISC "Specifications for the Design, Fabrication and Erection of Structural Steel for Buildings" shall govern this work. Welding shall be in accordance with the requirements of the AWS Standard Code for Arc and Gas Welding in Building Construction (Latest Edition).

B. The design of members and connections for any portions of the structure not indicated on the design plans shall be completed by the fabricator. Such design shall conform to the requirements of the current issue of the "Specifications for the Design, Fabrication and Erection of Structural Steel for Buildings" of the AISC. Shop drawings showing such design shall be submitted to the Engineer for approval before fabrication. No changes or modifications of the design will be permitted without approval.

C. Members and connections designed by the Fabricator shall have the full strength of the strongest element of the joint(s) or member(s) involved.

1.4 Materials:

All materials shall be new and shall conform to the following:

A. Heavy Structural Steel - ASTM Designation A-992.

B. High Strength Steel Bolts (HSB) - ASTM Designation A-325. Special anchor bolts are shown on drawings, tolerance shall be 1/16". All bolts shall be of American manufacturers.

C. Mild Steel Bolts (MB) - ASTM Designation A-307. All bolts shall be of American manufacturers.

D. Filler Metal for Welding - Welding electrodes for manual shielded metal arc welding shall conform to ASTM Specifications A-233-64T, E70 series.

E. Steel Pipe (Sch 40) - ASTM Designation A-53 and structural tubing ASTM Designation A500B, (F_y=46KSI).

F. Galvanized Steel Shapes, Plates, Bars and Strips - All steel shapes, plates, bars and strips shall be hot-dip galvanized after fabrication in complete accordance with ASTM A-123, (where shown or where listed herein).

G. Galvanized Steel Hardware (Bolts, Nuts and Washers) - All steel hardware to be galvanized shall be hot dip galvanized in complete accordance with ASTM A-153. Zinc coating shall be Class "C" (minimum). All of American Manufacturers.

Galvanized items shall be as shown on the drawings and as listed herein. The required galvanized items are:

1. All anchor bolts, channels, plates, angles and plates embedded in concrete or masonry. All bolts and washers joining galvanized members.

2. Miscellaneous steel framing at exterior doors and door openings including embedded items, lintels and plates.

3. Refer to drawings for additional items.

H. Evidence of Conformity - Certified test reports of structural steel, cast steel, steel forgings and rivet steel shall constitute sufficient evidence of conformity with the specifications. The manufacturer's certification for bolts and nuts and filler metal for welding shall constitute evidence of compliance.

I. All steel not galvanized shall be shop finished as follows:

All structural framing members shall be cleaned of all foreign matter and loose scale and shall be given one (1) complete coat of red oxide metal primer, which shall have a DFT of not less than 2.0 mils.

After erection, the field connections and all abraded places shall be repaired with a touch-up coat of the same primer.

J. Grout for setting anchor plates shall be Sono-grout by Sonneborn Building Products or other approved equals.

K. Welding electrodes shall conform to the American Welding Society Specifications Class E-70.

1.5 Structural Framing:

All framing members except where noted shall be hot-rolled structural shapes, cold-formed shapes or built-up shapes of welded plate construction. All metals shall comply with applicable ASTM Designations and the manufacturer shall designate the submittal of Design Notes, the applicable ASTM Designation for the various type members used. The minimum thickness of all hot-rolled or built-up structural steel shall be 0.188" thickness.

1.6 Workmanship and Details of Construction:

A. Connections shall be as shown on the plans; or when not shown on the drawings, shall conform to the requirements of the AISC and the AWS for welded and bolted connections.

1. Shop Connections shall be welded unless otherwise shown.

2. Field Connections on all major structural members shall be made with high strength bolts (A-325) as shown on contract drawings, except where welded connections are detailed. Connection not detailed on drawings shall be approved by the Engineer.

Minor connections may utilize mild steel bolts ASTM-307.

B. Formation of Holes shall be as follows:

1. Burning - Holes shall not be made or enlarged by burning. The burning of unfair holes in the field or shop will not be permitted.

2. Holes shall be provided in the structural steel as shown or required to permit connecting the work of other templates and other information as required. Holes may be drilled or punched, except that holes in base or bearing plates shall be drilled.

C. Nuts shall be of an approved self-locking type, or the bolt threads shall be upset to prevent backing-off of the nuts.

D. Bolting Except High Strength Bolting - Bolts shall be driven accurately into the hole without damaging the thread. Bolt heads shall be protected from damage during driving. Bolt heads and nuts shall rest squarely against the metal. Where bolts are to be used on beveled surfaces having slopes greater than 1 in 20 with a

plane normal to the bolt axis, beveled washers shall be provided to give full bearing to the head or nut. Where self-locking nuts are not furnished, bolt thread shall be upset to prevent the nuts from backing off. Bolts shall be of the length that will extend entirely through, but no more than 1/4 inch beyond the nuts. Bolt heads and nuts shall be drawn tight against the work with a suitable wrench not less than fifteen (15") inches long. Bolt heads shall be tapped with a hammer while the nut is being tightened, nuts shall be locked. Bolts shall be tightened to attain a stress of not less than 10,000 psi in the body of the bolt for A-36 or A-307 material.

High Strength Bolting shall comply with the requirements of AISC Specifications for Structural Steel Joints, using ASTM A-325.

1.7 Erection:

A. The rules and practices set forth in "Code of Standard Practice for Steel Buildings and Bridges" and "AISC Specifications for the Design, Fabrication and Erection of Structural Steel for Buildings" of the American Institute of Steel Construction (AISC) shall govern heavy structural steel work. Welding shall be in accordance with the Standard Code for Arc and Gas Welding in Building Construction of the American Welding Society (AWS).

All applicable codes shall be those in effect at the time of Contract award.

B. Work under this heading shall be properly coordinated with the work of all other trades. The Contractor shall verify that work of other trades which is related to or will be incorporated with this work is properly placed, inspected and approved before proceeding with this installation.

C. No material shall be fabricated or delivered to the site until after approval of shop drawings.

D. Substitution of sections and details may be made only when approved by the Engineer. In case structural sections shown on plans cannot be readily obtained, substitution of sections of equal strength which conform to the requirements of the design may be approved for use.

E. Fabrication assembling and erection shall conform to the approved shop drawings. Structural material shall be fabricated and assembled in the shop to the greatest extent possible. Shearing, flame cutting, and chipping shall be done carefully and accurately.

Assembled pieces shall be taken apart, if necessary, for the removal of burrs and shavings produced by the fabricating operations.

1.8 Responsibility for Errors:

A. The Contractor shall be responsible for all errors of fabrication and for the proper fitting of the various members shown on the shop drawings. Errors in the shop fabrication of deformation resulting from handling and transporting that prevent the proper assembly and fitting of parts shall be reported immediately to the Engineer and approval of the method of correction shall be obtained. Approved connections shall be made at no additional cost to the Owner.

1.9 Assembly and Fitting:

A. Driftpins - driftpins may be used only to bring together the several parts and shall not be used in such manner as to distort or damage the metal.

B. Gas-Cutting - The use of a gas-cutting torch in the field for correcting fabrication errors will not be permitted on any major member in the structural framing. The use of a gas cutting torch will be permitted only on minor members, when the member is not under stress, and then only after the approval of the Engineer has been obtained.

C. All work done and materials furnished shall be of first class quality to the satisfaction of the Engineer. The work of erection shall be at all times, subject to the inspection and acceptance of the Engineer or his representative on the ground.

1.10 Welding

A. Welding, where permitted or specified, shall be electrical arc method in accordance with the American Welding Society Specifications for Welding in Building Construction.

B. Welds shall be made only by operators who are currently qualified by tests, as prescribed by the American Welding Society "Standard Qualification Procedure", to perform the type of work required, except that this provision need not apply to tack welds not later incorporated into finishing welds carrying calculated stress.

C. All arc welding electrodes shall conform to the requirements of the American Welding Society Specifications for Iron and Steel Arc Welding Electrodes, latest edition.

05210 STEEL JOISTS

1.1 Scope of Work:

The work required under this section consists of all open-web steel joists, joist girders, accessories and related items necessary to complete the work shown on the drawings and/or as herein specified.

1.2 Shop Drawings:

Shop drawings and erection diagrams of steel joists shall be submitted in triplicate to the Engineer for approval. Drawings shall be submitted and processed in accordance with the requirements described in Division 1 General Requirements and 05100-5.2. Approval of Shop drawings shall be obtained prior to proceeding with manufacturing. Shop drawings shall indicate joists type, number, sizes, spacings, bridging, connections, headers, anchoring, bearing plates and all other details of erection.

1.3 Compliance with Standard & Industry Specifications:

A. All material and fabrication shall comply with one or more of the following ASTM Specifications: A-36, A-242, A-529, A-572, A-588, A-606.

B. An affidavit, if requested, shall be furnished by the Contractor from the manufacturer, certifying that the materials or products delivered to the job meets the requirements specified, however, such certification shall not relieve the Contractor from the responsibility of complying with any added requirements specified herein.

1.4 Joist-Type, Fabrication and Erection:

Open-Web Joists and Joist Girders shall be provided where shown on the drawings. The joists shall be designed, fabricated and erected in accordance with the Standard Specifications and Load Tables for Open-web Steel Joists, as adopted by the American Institute of Steel Construction, Inc., and the Steel Joist Institute, the latest edition, the applicable building code and with modifications as shown on the drawings and as herein specified. Provide bottom chord extensions where shown.

1.5 General Requirements

A. Painting - Joists, bridging, anchors and other accessories shall be

cleaned of all foreign matter and loose scale by hand or power tool (SSPC-SP15) and given one (1) shop coat of zinc chromate primer, joist manufacturer's standard metal primer, 2.0 mils DFT.

1. After erection, the field connections and all abraded places shall be repaired with a touch-up coat of the same primer.

2. Refer to Division 9 for final joist painting.

B. Open Web Joist Loading - Additional loads applied to top chord and seat shall be as follows and as shown on the contract documents. All of these additional loads shall be transferred through the bar joist structure and through the seat of the bar joist into the structural system below. These loads are actual loads and are not to be factored for wind.

1. 1,500 pounds axial load tension or compression in top chord due to wind. This applies to all bar joist in the roof system except where larger specific loadings are required by contract documents.

2. 650 lb. horizontal (perpendicular to joist) load applied to top chord at seat due to wind.

C. Open Web Joist Loading – Additional loads applied to top chord from roof top units and condensers shall be additive to the joint uniform loads.

Open Web Joist shall be designed as shown on plans and with unsymmetrical panel point loading.

D. Joist Girder Loading – Additional loads applied to top chord from roof top units and condensers shall be additive to the joist girder designation panel point loads.

Joist girders shall be designed as shown on plans with unsymmetrical panel point loading.

1.6 Erection - Joists shall be set to spacing shown with minimum bearings in accordance with Specifications of the Steel Joist Institute. Headers, trimmers and bearing plates shall be provided as shown.

A. Each joist resting on steel supports shall be welded to each support with two (2) welds, as shown on the drawings. Touch-up paint immediately after welding.

B. Joists shall be bridged with diagonal or continuous horizontal bridging. Bridging shall be spaced at intervals shown and in accordance with the Steel Joist Institute.

C. The joists shall be permanently fastened to supports and all bridging and anchors completely installed before any construction loads, other than workmen, are placed on the joists.

D. Welding shall be executed in accordance with the "Code for Arc and Gas Welding in Building Construction" of the American Welding Society as amended to date, and only by welding operators who are currently qualified to perform the type of work required.

E. Open web joists shall have uplift bridging/bracing at the first bottom chord panel point. Joist girders shall be strutted at the ends of the bottom chord for uplift stability. Design joists for uplift pressures as shown on drawings.

05310 STEEL ROOF DECK

1.1 Scope of Work

The work required consists of furnishing and installing all metal deck, accessories and related items necessary to complete the construction as shown on the drawings or specified herein.

1.2 Materials & Erection

A. Steel Roof Deck shall be Vulcraft, Fy=33KSI, 22 gage, galvanized G-90. Deck shall be 1-1/2" deep. Submit shop drawings and fastener data. Equal product manufacturer include Bowman, Epic, Wheeling.

B. Steel Roof Deck shall be attached to supporting members by means of galvanized steel, No. 12, Hex head, self drilling screws, in accordance with the following:

1. End parts shall have a four inch (4") thick lap and shall occur at supports. Fastening shall be done from the top side. Fastening of roof deck to supports shall be spaced as a minimum not more than 6" c.c. at edges and end termination. Interior fastening of roof deck shall be 12” c.c. at supports.

2. Attachment shall comply with FM-I-90 or as shown on plans.

3. Diaphragm shear strength screw pattern shall develop a minimum of 400 lbs/lf in plane, screw down application.

4. Steel for decks shall conform to the requirements of ASTM A568 and/or A-651, Grade A, or equal, having a minimum yield strength of 33,000 psi as noted above.

5. Accessories such as ridge and valley plates shall be supplied with the deck.

1.3 Structural Requirements:

A. Gravity load requirements: Submit manufacturer’s certification establishing the load carrying capacity of the specified integral roof deck assembly to include steel deck sheet and insulation; sealed by a licensed structural engineer registered to practice in the State of North Carolina. Individual component performance or

certification is not acceptable.

B. Diaphragm load requirements: Submit manufacturer's certification establishing the shear strength and shear stiffness of the specified integral roof deck assembly to include steel deck sheet and insulation; sealed by a licensed structural engineer registered to practice in the State of North Carolina. Individual component performance or certification is not acceptable.

C. Wind uplift requirements: Submit manufacturer's certification establishing the wind uplift performance of the specified integral roof deck assembly to include steel deck sheet and insulation; sealed by a licensed structural engineer registered to practice in the State of North Carolina. Individual component performance or certification is not acceptable.

05500 METAL FABRICATIONS

1.1 Scope of Work

A. The work required consists of all metal fabrication items. All items shall be free of defects impairing strength, durability and appearance.

B. Submit shop drawings on all items to the Engineer prior to fabrication.

C. Verify dimensions and job conditions prior to fabrication.

D. AWS "Structural Welding Code" of the American Welding Society shall govern. All exposed welds shall be ground smooth.

1.2 Materials

A. Structural Steel shapes shall conform to ASTM A-992 and A-36. Loose lintels shall be hot dipped galvanized for all masonry, (ASTM A-l23)l Light gage metal shall be G90 galvanized.

B. Miscellaneous Steel shall be mild steel unless otherwise specified and painted as per Section 0990 Painting.

C. Cast Iron shall be of the best quality soft, tough gray castings obtainable conforming to ASTM A-48-74.

D. Steel Pipes shall conform to ASTM A-53.

E. Bolts, nuts, screws, plugs, washers, shall conform to ASTM A-307, hot dip galvanized to ASTM A-l53.

F. Mild Steel Arc-Welding Rods shall conform to ASTM A-233.

G. Aluminum: Aluminum Alloy 6061-T6 Clear Anodized Finish.

H. Fabricated Items

1. General: Provide Fabricated Metal items as shown on the drawings or otherwise required to complete the work even though each item may not be specifically mentioned herein.

The following items shall include all required parts, supports, anchorage, fittings and accessories. This list is for convenience only, and in no way relieves the Contractor from furnishing items indicated elsewhere or otherwise required.

2. Miscellaneous Steel Bracing: Provide and install all miscellaneous steel shapes, angles, channels, etc., for securing of and bracing door frames or other fabricated equipment to masonry or concrete as shown on the drawings or as necessary to insure proper stability and support. All items shall be galvanized.

3. Provide rough bucks as detailed or otherwise required, (galvanized).

4. Provide anchor bolts for miscellaneous items where not provide by trades furnishing the equipment. Wedge anchors shall generally be used, (galvanized).

1.3 Fabrication and Installation

A. General

1. Miscellaneous Items: Furnish and install fastening devices, anchor bolts, hangers, sleeves, angle frames, etc., as shown on the drawings, or otherwise required in the completion of the work. Even though every item is not herein specifically mentioned. Do not omit or duplicate required materials.

2. Provide all connecting members and attaching devices for properly securing fabricated items. Scribe and fit items as necessary for installation. Attachment with wood or fiber plugs in masonry is not permitted. Use galvanized steel wedge anchors on exterior and ferrous anchors on the interior.

B. Anchor bolts, nuts and heads shall be standard; provide proper washers where required. Attaching devices to be covered with masonry shall be installed as far as practicable as the work progresses, to avoid cutting or drilling. Masonry cutting shall be provided under the masonry contract. .

C. All work shall be laid out, cut and assembled by mechanics skilled in metal fabricating so that the work will present a neat, satisfactory appearance in the building. Measurements shall be accurate, cutting true to line, joints tight and secure, all in accordance with the best, current practice.

D. Required holes shall be accurately drilled or punched; do not cut with torch. Holes not matching shall be reamed and not drifted.

E. Welding: Electrodes shall conform to the American Welding Society Specifications Class E-70. Grind and remove scale from welded joints in metal burned or cut with torch; chip back to bright metal before welding. Welded joints to be exposed to view shall have the welds so formed that the joint can be ground smooth with adjacent surfaces.

F. Shop assemble and fit work for installation, if possible.

G. Construct and erect work plumb, square, straight and true to line, with tight joints at intersections.

H. Castings: Cast work shall be secured with bolts or tap screws where practicable; all screws and bolt heads shall be concealed or countersunk if necessary to expose on finished exterior faces.

I. Protective Coatings

1. Galvanizing: All ferrous metal items, structural shapes, closures, fittings, anchoring devices, etc., used in conjunction with exterior work shall be hot-dipped galvanized even if specified to be painted. (ASTM A-123) unless otherwise indicated. Galvanize after fabrication.

2. All material shall be thoroughly cleaned of all loose mill scale, rust, splatter, sag and flux deposit, oil, dirt and other foreign matter before applying finished coating.

3. Painting shall be applied only to dry surfaces and be allowed to dry before using.

4. Painting shall not be done in wet or freezing weather.

5. Bitumastic paint shall be of approved kind and quality. No thinning will be permitted. Apply heavy coat to contact area of dissimilar metals in contact with one another.

6. Refer to Division 9 for additional painting requirements.

05510 METAL LADDER

PART 1 - GENERAL

A. SCOPE OF WORK:

1. Furnish, construct and install a roof access ladder at the location shown on the plans.

2. Ladder shall be stick built and conform to OSHA specifications.

PART 2 - PRODUCTS

A. METAL LADDER

1. Fabrication: Ladder shall be fabricated from stick steel consisting of the following members. Field verify height of ladder.

a. 2” x 3/8” flat bar rails.
b. 1” diameter smooth bar rungs.

PART 3 - EXECUTION

A. PREPARATION

1. Provide any wall blocking as nessecary.

B. INSTALLATION

1. Ladder to be anchored at top, bottom, & 2 locations in between.

2. Paint SW6215 Rocky River (see division 9)

DIVISION 7 THERMAL & MOISTURE PROTECTION

07210 PARTITION INSULATION

A. Scope of Work

Include furnishing and installation of insulation in interior and exterior partitions as indicated on drawings. Submit manufacturer's data for approval.

B. Quality Assurance

Acceptable Manufacturers: Owens-Corning, United States Gypsum, Manville, Celotex Corp.

C. Materials

1. Batts shall be flame resistant Sonobatts, OCF, (no Kraft Paper), glass fiber batts. Insulation thickness, R-value, and location to be shown on the drawings.

2. Extruded Polystyrene Board Insulation: Rigid cellular polystyrene thermal insulation with closed cells and integral high density skin, formed by the exposition of polystyrene base resign in an extrusion process to comply with ASTM C 578, Type IV; 5-year aged r-value of 5 Btu/ (hr x sf x degree F) at 75 degree F in manufacturer’s standard lengths and widths. Thickness shown on drawings.

   a. Manufacturers: The following manufacturers’ products have been used to establish minimum standards for materials, workmanship & function. Equal products of other manufacturers may be used in the work, provided such products have been approved by the Architect.

      “Styrofoam Scoreboard”; Dow Chemical USA.
      “Foamular 150”; Owens Corning.
      “Certifoam”, Minnesota Diversified Products, Inc.

   b. Adhesive: Type recommended by insulation board manufacturer for application indicated.

D. Installation

Install in accordance with details on drawings and manufacturers instructions.

07214 FOAMED-IN-PLACE MASONRY WALL INSULATION

A. Scope of Work:

Include furnishing and installation of insulation as indicated on drawings. Submit manufacturer's data for approval.

B. Quality Assurance:

1. Insulation shall be installed as per manufacture's recommendation and must come from the manufacturer pre-mixed to ensure consistency. A one year product and installation warranty will be issued by both the manufacturer and installer.

2. Engage an experienced dealer/applicator who has been trained and licensed by the product manufacturer and which has not less than three years direct experience in the installation of the product used.

C. Acceptable Manufacturers:

1. **"Core-Fill 500™"** as manufactured by
   Tailored Chemical Products
   P.O. Drawer 4186
   Hickory, N.C. 28603
   (800) 627-1687

Any contractor who intends to submit a bid using manufacturer other than the acceptable manufacturers listed must submit for pre-qualification in writing seven (7) days prior to the bid date. Any contractor who fails to submit all information as requested will be subject to rejection.

D. Minimum Product Performance Standards:

1. Fire-Resistance Ratings: Minimum four (4) hour fire resistance wall rating (ASTM E-119) for 8" and 12" concrete masonry units when used in standard two (2) hour rated CMUs.

2. Surface Burning Characteristics: Maximum flame spread, smoke developed and fuel contributed of 0, 5 and 0 respectively.

3. Combustion Characteristics: Must be noncombustible, Class A building material.

4. Thermal Values: "R" Value of 4.91/inch @ 32 degrees F mean; ASTM C-177.

5. Sound Abatement: Minimum Sound Transmission Class ("STC") rating of 53 and a minimum Outdoor Indoor Transmission Class ("OITC") rating of 44 for 8" wall assembly ASTM E90-90).

E. Installation Guidelines:

Fill all open cells and voids in hollow concrete masonry walls where shown on drawings. The foam insulation shall be pressure injected through a series of 5/8" to 7/8" holes drilled into every vertical column of block cells (every 8" on center) beginning at an approximate height of four (4) feet from finished floor level. **Drill all holes on the inside face of the wall**. Repeat this procedure at an approximate height of ten (10) feet above the first horizontal row of holes (or as needed) until the void is completely filled. Patch holes with mortar and score to resemble existing surface.

07240 EIFS SYSTEM

PART 1 - GENERAL

1.01 SUMMARY

A. Materials and installation of Air and Moisture Barrier Drainable EIF System as indicated on the drawings.

1.02 DESIGN REQUIREMENTS

A. Moisture Control

1. Prevent the accumulation of water behind the EIF system, either by condensation or leakage through the wall construction, in the design & detailing of the wall assembly.
   a. Provide flashing to direct water to the exterior where it is likely to penetrate components in the wall assembly, including, above window and door heads, beneath window and door sills, at roof/wall intersections, decks, abutments of lower walls with higher walls, above projecting features, and at the base of the wall.
   b. Air Leakage Prevention—provide continuity of air barrier system at foundation, roof, windows, doors, and other penetrations through the system with connecting and compatible air barrier components to minimize condensation and leakage caused by air movement.

B. Color Selection & Submittals

1. Any contractor who intends to submit a bid using a manufacturer other than those specified below must submit for pre-qualification in writing seven (7) days prior to the bid date. Product data must be submitted along with color samples made to match those specified on the drawings. Any contractor who fails to submit the product data & samples as requested will be subject to rejection. Color Samples must be submitted along with shop drawings regardless of the manufacturer chosen.

   a. STO Colors: See drawings for STO colors.
   b. Dryvit Colors:
      i. EIFS-1: DOTR011022 Sandstone (STO93860) w/ Sandpebble Fine Finish
      ii. EIFS-2: DOTR021022 Smoked Putty (STO93240) w/ Sandpebble Fine Finish
      iii. EIFS-G: DOTR031030 Envy (SW6925) w/ Sandblast Finish

C. Joints

1. Provide minimum 1/2 inch wide expansion joints in the EIFS at the locations shown on the drawings.

2. Provide minimum 1/2 inch wide sealant joints at all penetrations through the EIFS (windows, doors, etc.).

3. Install compatible backer rod and sealant that has been evaluated in accordance with ASTM C 1382, “Test Method for Determining Tensile Adhesion Properties of Sealants When Used in Exterior Insulation and Finish System (EIFS) Joints,” and that meets minimum 50% elongation after conditioning.

4. Provide joints so that Air Barrier continuity is maintained across the joint and drain joints to the exterior.

D. Trim, Projecting Architectural Features and Reveals

1. All trim and projecting architectural features must have a minimum 1:2 [27°] slope along their top surface. All horizontal reveals must have a minimum 1:2 [27°] slope along their bottom surface. Where trim/feature or bottom surface of reveal projects more than 2 inches from the face of the EIFS wall plane, protect the top surface with waterproof base coat.

E. Insulation Thickness

1. Minimum EPS insulation thickness is 1 inch. See drawings for EPS thickness.

2. Maximum EPS insulation thickness is 12 inches when installed in accordance with ESR 1748 (including architectural features).

1.03 QUALITY ASSURANCE

A. Manufacturer requirements

1. Member in good standing of the EIFS Industry Members Association (EIMA).

2. System manufacturer for a minimum of twenty (25) years.

3. Manufacturing facilities ISO 9001-2000 certified Quality System.

B. Contractor requirements

1. Engaged in application of EIFS for a minimum of three (3) years.

2. Knowledgeable in the proper use and handling of Sto materials and possessing certificate of completion of Sto on-line application test.

3. Employ skilled mechanics who are experienced and knowledgeable in EIFS application, and familiar with the requirements of the specified work.

4. Successful completion of minimum of three (3) projects of similar size and complexity to the specified project.

5. Provide the proper equipment, manpower and supervision on the job site to install the system in compliance with Sto's published specifications and details and the project plans and specifications.

C. Insulation board manufacturer requirements

1. Recognized by Sto as capable of producing insulation board to meet system requirements, and hold a valid certification with Sto.

2. Listed by an approved agency.

3. Label insulation board with information required by Sto, the approved listing agency and the applicable building code.

D. Inspections

1. Provide independent third party inspection where required by code or contract documents.

1.04 DELIVERY, STORAGE, & HANDLING

A. Deliver all materials in their original sealed containers bearing manufacturer's name and identification of product.

B. Protect coatings (pail products) from freezing and temperatures in excess of 90°F (32° C). Store away from direct sunlight.

C. Protect Portland cement based materials (bag products) from moisture and humidity. Store under cover off the ground in a dry location.

1.05 PROJECT / SITE CONDITIONS

A. Maintain ambient and surface temperatures above 40°F (4°C) during application and drying period, minimum 24 hours after application of Air/Moisture barrier and EIFS.

B. Provide supplementary heat for installation in temperatures less than 40°F (4°C).

C. Provide protection of surrounding areas and adjacent surfaces from application of materials.

1.06 COORDINATION SCHEDULING

A. Coordinate installation of foundation waterproofing, roofing membrane, windows, doors, and other penetrations to provide a continuous Air and Moisture Barrier.

B. Provide protection of rough openings before installing windows, doors, and other penetrations through the wall and provide sill flashing.

C. Coordinate installation of windows and doors so Air and Moisture Barrier components are connected to them to provide a continuous Air and Moisture Barrier.

D. Install window and door head flashing immediately after windows and doors are installed.

E. Install diverter flashings wherever water can enter the wall assembly to direct water to the exterior.

F. Install copings and sealant immediately after installation of the EIF system and when EIFS coatings are dry.

G. Attach penetrations through EIFS to structural support and provide water tight seal at penetrations.

PART 2 - PRODUCTS

2.01 MANUFACTURERS

A. Provide EIFS System, Air/Moisture Barrier and accessories from single source manufacturer or approved supplier.

B. The following are approved manufacturers:
1. Sto Corp.— EIFS System: StoTherm Essence NExT – 10-year warranty
2. Dryvit – Outsulation Plus MD EIFS w/ Drainage. – 10-year warranty

Any contractor who intends to submit a bid using a manufacturer other than that specified must submit for pre-qualification in writing seven (7) days prior to the bid date. Product data must be submitted along with color samples made to match those specified on the drawings. Any contractor who fails to submit the product data & samples as requested will be subject to rejection.

2.02 AIR/MOISTURE BARRIER

A. StoGuard™

1. Joint Compound: Sto Gold Fill—ready mixed flexible joint compound for rough opening protection and joint treatment of wall sheathing (not required for concrete/masonry surfaces)
   Note: Contractor has option of using Sto Gold Coat® over standard mesh.
2. Waterproof Coating: Sto Gold Coat®—ready mixed waterproof coating for wall substrates and sheathings.
3. Elastomeric Rough Opening Treatment (if shown on drawings): StoGuard Rapid Seal™ with StoGuard Mesh: moisture cure elastomeric waterproof air barrier material.

2.03 ADHESIVE

A. Sto Primer/Adhesive-B---one-component polymer modified cement based, factory blend adhesive with less than 33 percent Portland cement content by weight.

2.04 EXPANDED POLYSTYRENE BOARD INSULATION

A. Nominal 1.0 lb/ft^3 (16 kg/m^3) Expanded Polystyrene (EPS) Insulation Board in compliance with ASTM C 578 Type I requirements, and EIMA Guideline Specification for Expanded Polystyrene (EPS) Insulation Board. See drawings for thickness.

2.05 BASE COAT

A. Sto Primer/Adhesive-B---one-component polymer modified cement based, factory blend adhesive with less than 33 percent Portland cement content by weight.

2.06 MESH

A. Standard Mesh: nominal 4.5 oz./yd^2, symmetrical, interlaced open-weave glass fiber fabric made with alkaline resistant coating for compatibility with Sto materials.

B. Detail Mesh: nominal 4.2 oz/yd^2, flexible, symmetrical, interlaced glass fiber fabric, with alkaline resistant coating for compatibility with Sto materials *(used for standard EIFS backwrapping, aesthetic detailing, and reinforcement of sheathing joints and protection of rough openings with air/ moisture barrier).*

2.07 PRIMER

A. Sto Primer Smooth – acrylic based tinted primer for spray application, tinted to the color of the finish

2.08 FINISH COAT

A. Sto 310 Essence Finish: Acrylic based textured wall coating with graded marble aggregate. Texture: Fine Sand #310, tinted to colors as indicated on drawings.

B. Stolit 130D: Acrylic based textured wall coating specially formulated for tinting to dark, vibrant colors. (Use only where STO SW 'Envy' SW 6925 is used)

2.09 JOB MIXED INGREDIENTS

A. Water--Clean and potable.
B. Portland cement – ASTM C 150, Type I, Type II, Type I-II

PART 3 – EXECUTION

Refer to long form specification E100G for detailed information on substrates, performance data, mixing and installation instructions

3.01 INSTALLATION

A. Install Air/Moisture Barrier and EIFS in compliance with drawings & manufacturer's published instructions.

3.02 PROTECTION

A. Provide protection of installed materials from water infiltration into or behind them.

B. Provide protection of installed materials from dust, dirt, precipitation, freezing and continuous high humidity until they are fully dry.

07500 SINGLE PLY MEMBRANE ROOF

PART 1 GENERAL

1.01 DESCRIPTION

A. The project consists of installing Carlisle's Sure-Weld white TPO 60-mil membrane adhered Roofing System as outlined below. Apply the Sure-Weld Adhered Roofing System in conjunction with two layers of Carlisle HP-H Polyiso with total R-value of no less than that which is listed on the drawings over metal roof deck.

1.02 EXTENT OF WORK

A. Provide all labor, material, tools, equipment, and supervision necessary to complete the installation of the Sure-Weld 60-mil thick white reinforced TPO (Thermoplastic Polyolefin) reinforced membrane Adhered Roofing System including flashings and insulation as specified herein and as indicated on the drawings in accordance with the manufacturer's most current specifications and details.

B. The roofing contractor shall be fully knowledgeable of all requirements of the contract documents and shall make themselves aware of all job site conditions that will affect their work.

C. The roofing contractor shall confirm all given information and advise the building owner, prior to bid, of any conflicts that will affect their cost proposal.

D. Any contractor who intends to submit a bid using a roofing system other than the approved manufacturer must submit for pre-qualification in writing seven (7) days prior to the bid date. Any contractor who fails to submit all information as requested will be subject to rejection. Bids stating "as per plans and specs" will be unacceptable.

1.03 SUBMITTALS

A. Prior to starting work, the roofing contractor must submit the following:

1. Shop drawings showing layout, details of construction and identification of materials.

2. Sample of the manufacturer's Membrane System Warranty.

3. Submit a letter of certification from the manufacturer which certifies the roofing contractor is authorized to install the manufacturer's roofing system and lists foremen who have received training from the manufacturer along with the dates training was received.

4. Certification from the membrane manufacturer indicating the membrane thickness over the reinforcing scrim (top ply membrane thickness) is nominal 15 mil or thicker.

5. Certification of the manufacturer's warranty reserve.

B. Upon completion of the installed work, submit copies of the manufacturer's final inspection to the specifier prior to the issuance of the manufacturer's warranty.

1.04 PRODUCT DELIVERY, STORAGE AND HANDLING

A. Deliver materials to the job site in the manufacturer's original, unopened containers or wrappings with the manufacturer's name, brand name and installation instructions intact and legible. Deliver in sufficient quantity to permit work to continue without interruption.

B. Comply with the manufacturer's written instructions for proper material storage.

1. Store Sure-Weld membrane in the original undisturbed plastic wrap in a cool, shaded area. Sure-Weld membrane that has been exposed to the elements for approximately 7 days must be prepared with Carlisle Weathered Membrane Cleaner prior to hot air welding.

2. Store curable materials (adhesives and sealants) between 60°F and 80°F in dry areas protected from water and direct sunlight. If exposed to lower temperature, restore to 60°F minimum temperature before using.

3. Store materials containing solvents in dry, well ventilated spaces with proper fire and safety precautions. Keep lids on tight. Use before expiration of their shelf life.

C. Insulation must be on pallets, off the ground and tightly covered with waterproof materials.

D. Any materials which are found to be damaged shall be removed and replaced at the applicator's expense.

1.05 WORK SEQUENCE

A. Schedule and execute work to prevent leaks and excessive traffic on completed roof sections. Care should be exercised to provide protection for the interior of the building and to ensure water does not flow beneath any completed sections of the membrane system.

B. Do not disrupt activities in occupied spaces.

1.06 USE OF THE PREMISES

A. Before beginning work, the roofing contractor must secure approval from the building owner's representative for the following:

1. Areas permitted for personnel parking.

2. Access to the site.

3. Areas permitted for storage of materials and debris.

4. Areas permitted for the location of cranes, hoists and chutes for loading and unloading materials to and from the roof.

B. Interior stairs or elevators may not be used for removing debris or delivering materials, except as authorized by the building superintendent.

1.07 EXISTING CONDITIONS

If discrepancies are discovered between the existing conditions and those noted on the drawings, immediately notify the owner's representative by phone and solicit the manufacturer's approval prior to commencing with the work. Necessary steps shall be taken to make the building watertight until the discrepancies are resolved.

1.08 SAFETY

The roofing contractor shall be responsible for all means and methods as they relate to safety and shall comply with all applicable local, state and federal requirements that are safety related. **Safety shall be the responsibility of the roofing contractor.** All related personnel shall be instructed daily to be mindful of the full time requirement to maintain a safe environment for the facility's occupants including staff, visitors, customers and the occurrence of the general public on or near the site.

1.09 WORKMANSHIP

A. Applicators installing new roof, flashing and related work shall be factory trained and approved by the manufacturer they are representing.

B. All work shall be of highest quality and in strict accordance with the manufacturer's published specifications and to the building owner's satisfaction.

C. There shall be a supervisor on the job site at all times while work is in progress.

1.10 QUALITY ASSURANCE

A. The Sure-Weld Membrane Roofing System must achieve a UL Class A.

B. The specified roofing assembly must have been successfully tested by a qualified testing agency to resist the design uplift pressures calculated according to American Society of Civil Engineers (ASCE 7) and ANSI/SPRI WD-1 "Wind Design Standard Practice for Roofing Assemblies."

C. The membrane must be manufactured by the material supplier. Manufacturer's supplying membrane made by others are not acceptable.

D. Unless otherwise noted in this specification, the roofing contractor must strictly comply with the manufacturer's current specifications and details.

E. The roofing system must be installed by an applicator authorized and trained by the manufacturer in compliance with shop drawings as approved by the manufacturer. The roofing applicator shall be thoroughly experienced and upon request be able to provide evidence of having at least five (5) years successful experience installing single-ply TPO roofing systems and having installed at least one (1) roofing application or several similar systems of equal or greater size within one year.

F. Provide adequate number of experienced workmen regularly engaged in this type of work who are skilled in the application techniques of the materials specified. Provide at least one thoroughly trained and experienced superintendent on the job at all times roofing work is in progress.

G. There shall be no deviations made from this specification or the approved shop drawings without the prior written approval of the specifier. Any deviation from the manufacturer's installation procedures must be supported by a written certification on the manufacturer's letterhead and presented for the specifier's consideration.

H. The Sure-Weld TPO White membrane meets CRRC (Cool Roof Rating Council) for reflectance and emittance. When tested in accordance with ASTM C1549, the Sure-Weld White material has an initial solar reflectance of 0.79 and a 3-year aged reflectance of 0.70. The material has also been tested for emittance in accordance with ASTM C1371; an initial emittance of .90 and a 3-year aged emittance of 0.86 were achieved.

I. The Sure-Weld White TPO membrane meets the emittance requirements set forth by the USGBC (U. S. Green Building Council) for their LEED (Leadership in Energy and Environmental Design) Program. The Sure-Weld White TPO material has an emittance of 0.95 (when tested in accordance with ASTM E408) and an SRI (solar reflectance index) of 110 (calculated using ASTM E 1980).

J. Upon completion of the installation, the applicator shall arrange for an inspection to be made by a non-sales technical representative of the membrane manufacturer in order to determine whether or not corrective work will be required before the warranty will be issued. Notify the building owner seventy-two (72) hours prior to the manufacturer's final inspection.

1.11 JOB CONDITIONS, CAUTIONS AND WARNINGS

Refer to Carlisle's Sure-Weld Roofing System specification for General Job Site Considerations.

A. Material Safety Data Sheets (MSDS) must be on location at all times during the transportation, storage and application of materials.

B. When positioning membrane sheets, exercise care to locate all field splices away from low spots and out of drain sumps. All field splices should be shingled to prevent bucking of water.

C. When loading materials onto the roof, the Carlisle Authorized Roofing Applicator must comply with the requirements of the building owner to prevent overloading and possible disturbance to the building structure.

D. Proceed with roofing work only when weather conditions are in compliance with the manufacturer's recommended limitations, and when conditions will permit the work to proceed in accordance with the manufacturer's requirements and recommendations.

E. Proceed with work so new roofing materials are not subject to construction traffic. When necessary, new roof sections shall be protected and inspected upon completion for possible damage.

F. Provide protection, such as 3/4 inch thick plywood, for all roof areas exposed to traffic during construction. Plywood must be smooth and free of fasteners and splinters.

G. The surface on which the insulation or roofing membrane is to be applied shall be clean, smooth, dry, and free of projections or contaminants that would prevent proper application of or be incompatible with the new installation, such as fins, sharp edges, foreign materials, oil and grease.

H. New roofing shall be complete and weather tight at the end of the work day.

I. Contaminants such as grease, fats and oils shall not be allowed to come in direct contact with the roofing membrane.

1.12 WARRANTY

A. Provide manufacturer’s 20 year Total System Warranty covering both labor and material with no dollar limitation. The maximum wind speed coverage shall be peak gusts of 80 mph measured at 10 meters above ground level. Certification is required with bid submittal indicating the manufacturer has reviewed and agreed to such wind coverage.

B. A Reflectivity Warranty Amendment is available indicating the membrane will meet the Energy Star program reflectivity guidelines for both new and aged membrane for a period of 10 years.

C. Pro-rated System Warranties shall not be accepted.

D. Evidence of the manufacturer’s warranty reserve shall be included as part of the project submittals for the specifier’s approval.

PART 2 PRODUCTS

2.01 GENERAL

A. All components of the specified roofing system shall be products of Carlisle SynTec or accepted by Carlisle SynTec as compatible.

B. All products (including insulation, fasteners, fastening plates, prefabricated accessories and edgings) must be **manufactured and/or supplied** by the roofing system manufacturer and covered by the warranty.

C. Carlisle Roofing Systems (www.carlisle-syntec.com)

2.02 MEMBRANE

Furnish Sure-Weld 60-mil thick white reinforced TPO (Thermoplastic Polyolefin) membrane as needed to complete the roofing system. Membrane thickness over the reinforcing scrim (top-ply thickness) shall be nominal 15 mil thick or greater. Membrane sheets in rolls 12', 10' or 8' wide by 100' long.

2.03 INSULATION BOARD

A. When applicable, insulation shall be installed in multiple layers. The first and second layers of insulation shall be mechanically fastened to the substrate in accordance with the manufacturer's published specifications.

B. Insulation shall be **Carlisle HP-H Polyiso** as supplied by Carlisle SynTec. Minimum R-value required is listed on the drawings, to be applied in two layers.

1. **Carlisle HP-H Polyiso** – A foam core insulation board covered on both sides with a medium weight fiber-reinforced felt facer meeting ASTM C 1289-06, Type II, Class 1, Grade 2 (20 psi) or Grade 3 (25 psi). The product is available in 4’ x 8’ standard size with a thickness from 1 to 4 inches. 4’ x 4’ tapered panels are also available.

2.04 ADHESIVES AND CLEANERS

All products shall be furnished by Carlisle and specifically formulated for the intended purpose.

A. **Sure-Weld Bonding Adhesive:** A high-strength, synthetic rubber adhesive used for bonding Sure-Weld membrane to various surfaces. The adhesive is applied to both the membrane and the substrate at a coverage rate of approximately 60 square feet per gallon per finished surface (includes coverage on both surfaces).

B. **Low VOC Bonding Adhesive for TPO:** This product meets the <250 gpl VOC (volatile organic compound) content requirements of the OTC Model Rule for Single-Ply Roofing Adhesives. A high strength, solvent-based contact adhesive that allows bonding of TPO membrane to various porous and non-porous substrates. Apply at a rate of 60 ft2 per gallon finished surface. Available in 5 gallon pails. This product <u>does not comply with southern California counties with additional restrictions on solvents. See Carlisle’s Product Data Sheet for a listing of the counties involved.</u>

C. **Low VOC Bonding Adhesive 1168:** This product meets the <250 gpl VOC (volatile organic compound) content requirements of the OTC Model Rule for Single Ply Roofing Adhesives. A high strength, solvent-based contact adhesive the allows bonding of TPO membrane to various porous and non-porous substrates. Apply at a rate of 60 ft2 per gallon finished surface. Available in 5-gallon cans. This product complies with southern California counties with additional restrictions on solvents. See Carlisle’s Product Data Sheet for a listing of the counties involved.

D. **Cut-Edge Sealant:** A white or clear colored sealant used to seal cut edges of reinforced Sure-Weld membrane. A coverage rate of approximately 225 - 275 linear feet per squeeze bottle can be achieved when a 1/8" diameter bead is applied.

E. **Water Cut-Off Mastic:** Used as a mastic to prevent moisture migration at drains, compression terminations and beneath conventional metal edging (at a coverage rate of approximately 10' per tube or 100' per gallon).

F. **Universal Single-Ply Sealant:** A 100% solids, solvent free, voc free, one part polyether sealant that provides a weather tight seal to a variety of building materials. It is white in color and is used for general caulking such as above termination bars and metal counter flashings and at scuppers.

G. **Thermoplastic One-Part Pourable Sealer**: A one-part, moisture curing, elastomeric polyether sealant used to fill TPO Molded Pourable Sealant Pockets. Packaged in 4, 2-liter foil pouches inside a reusable plastic bucket. 1 pouch will fill 2 TPO Molded Pourable Sealant Pockets.

H. **Weathered Membrane Cleaner:** Used to prepare membrane for heat welding that has been exposed to the elements or to remove general construction dirt at an approximate coverage rate of 400 square feet per gallon (one surface).

I. **TPO Primer:** A solvent-based primer used to prepare the surface of Sure-Weld Membrane prior to application of Pressure-Sensitive Coverstrip and TPO Pressure-Sensitive RUSS.

J. **TPO Low VOC Primer::** A solvent-based, low solids primer used to prepare the surface of Sure-Weld Membrane prior to application of Pressure-Sensitive Coverstrip and TPO Pressure-Sensitive RUSS. This low VOC product is ideal for use in states where environmental issues are a concern.

2.05 FASTENERS AND PLATES

To be used for mechanical attachment of insulation and membrane securement:

A. **HP-X Fasteners**: A heavy duty #15 threaded fastener with a #3 phillips drive used for membrane or insulation securement into steel, wood plank or minimum 15/32 inch thick plywood when increased pullout resistance is desired.

B. **Insulation Fastening Plates**: a nominal 3 inch diameter plastic or metal plate used for insulation attachment.

2.06 MEMBRANE TERMINATIONS

A. **Metal Termination Bar**: (If shown on drawings) a 1” wide and .098” thick extruded aluminum bar pre-punched 6” on center; incorporates a sealant ledge to support Lap Sealant and provide increased stability for membrane terminations.

PART 3 EXECUTION

3.01 GENERAL

A. Comply with the manufacturer's published instructions for the installation of the membrane roofing system including proper substrate preparation, job site considerations and weather restrictions.

B. Position sheets to accommodate contours of the roof deck and shingle splices to avoid bucking water.

3.02 INSULATION BOARD PLACEMENT

A. Do not install more insulation board than can be covered with membrane in the same day. Install insulation or membrane underlayment over the substrate with boards butted together. Gaps greater than 1/4” are not acceptable. Stagger joints both horizontally and vertically if multiple layers are provided.

B. Secure insulation to the substrate with the required mechanical fasteners in accordance with the manufacturer’s specifications.

3.03 MEMBRANE PLACEMENT AND ATTACHMENT

A. Position Sure-Weld membrane over the acceptable substrate. Fold membrane sheet back onto itself so half the underside of the membrane is exposed.

B. Apply Bonding Adhesive in accordance with the manufacturer's published instructions, to the exposed underside of the membrane and the corresponding substrate area. Do not apply Bonding Adhesive along the splice edge of the membrane to be hot air welded over the adjoining sheet. Allow the adhesive to dry until it is tacky but will not string or stick to a dry finger touch.

1. Roll the coated membrane into the coated substrate while avoiding wrinkles. Brush down the bonded section of the membrane sheet immediately after rolling the membrane into the adhesive with a soft bristle push broom to achieve maximum contact.

2. Fold back the unbonded half of the sheet and repeat the bonding procedures.

C. Position adjoining sheets to allow a minimum overlap of 2 inches to provide a minimum 1-1/2” hot air weld.

D. Continue to install adjoining membrane sheets in the same manner, overlapping edges a minimum of 2 inches and complete the bonding procedures as stated previously.

3.04 MEMBRANE HOT AIR WELDING PROCEDURES

A. Hot air weld the Sure-Weld membrane using an Automatic Hot Air Welding Machine or Hot Air Hand Welder in accordance with the manufacturer's specifications. At all splice intersections, roll the seam with a silicone roller immediately after welder crossed the membrane step-off to ensure a continuous hot air welded seam.

Note: All splice intersections shall be overlaid with Sure-Weld T-joint covers or non-reinforced flashing.

B. Probe all seams once the hot air welds have thoroughly cooled (approximately 30 minutes).

C. Repair all seam deficiencies the same day they are discovered.

D. Apply Cut Edge Sealant on all cut edges of reinforced membrane (where the scrim reinforcement is exposed) after seam probing is complete. Cut Edge Sealant is not required on vertical splices.

3.05 FLASHING

A. Flashing of parapets, curbs, expansion joints and other parts of the roof must be performed using Sure-Weld reinforced membrane. Sure-Weld non-reinforced membrane can be used for flashing pipe penetrations, Sealant Pockets, and scuppers, as well as inside and outside corners, when the use of prefabricated accessories is not feasible.

B. Follow manufacturer's typical flashing procedures for all wall, curb, and penetration flashing including metal edging/coping and roof drain applications.

3.06 DAILY SEAL

A. On phased roofing, when the completion of flashings and terminations is not achieved by the end of the work day, a daily seal must be performed to temporarily close the membrane to prevent water infiltration.

B. Complete an acceptable membrane seal in accordance with the manufacturer's requirements.

3.07 CLEAN UP

A. Perform daily clean up to collect all wrappings, empty containers, paper, and other debris from the project site. Upon completion, all debris must be disposed of in a legally acceptable manner.

B. Prior to the manufacturer's inspection for warranty, the applicator must perform a pre-inspection to review all work and to verify all flashing has been completed as well as the application of all caulking.

07600 FLASHING & SHEET METAL

A. Scope

1. All materials passing through or mounted on the roof shall be flashed.

2. Include all flashing at windows, doors and finished openings.

B. Materials

1. Downspouts (and scupper, conductor head and gutters, if shown on the drawings) shall be prefinished aluminum & painted.

2. Metal parapet cap shall be 24 ga. galvanized steel & painted.

3. Plastic bituminous cement shall comply with Fed. Spec. SS-C.153, Type 1 or ASTM D2822.

4. Fasteners and nails shall be stainless steel except where otherwise shown.

5. Sealants shall comply with Section 07900 Caulking & Sealants.

C. Fabrication - Installation

1. All work shall be water-tight. Fabrication and installation shall be consistent with standards of good workmanship and the requirements of the roofing work. All materials passing through or mounted on the roof shall be flashed. Proper allowance shall be made for expansion.

2. Clean all new metal work at the completion of the project.

3. Metals which join or abut dissimilar materials or other metals shall be isolated or insulated to prevent electrolysis.

4. Flashing and sheet metal work shall be set in true alignment without "oil canning" or distortion.

D. Clean-up

Remove all empty containers, flashing materials, tools, etc., and clean stains from surfaces to be exposed.

07900 CAULKING & SEALANTS

A. SCOPE OF WORK:

Includes caulking, sealing, pointing and other related items necessary to complete project indicated by drawings. Sealants shall be installed by the trade installing the material.

1. Inside and outside face of all vertical wall joints, around door and window frames and at mechanical openings shall receive sealant.

    a. Sealant - Use on exterior or interior where joint is subject to movement. Cyclic movement capacity is 12 to 25 percent.

    b. Caulk - Use on interior only where joint is not subject to movement. Cyclic movement is 5 to 10 percent.

B. PRODUCTS:

1. Sealant - Tremco "Dymeric", Pecora NR-200 or Sonneborn "Sonolastic NP-2" or an approved equal, with 20-year minimum life expectancy and installed in strict accordance with the manufacturer's recommendations. Provide backer rods compatible with sealant used.

2. Caulk - Resinous, gun grade, non-staining plastic compound with shrinkage factor not exceeding 15 percent. TREMCO MONO, Sonneborn "Sonolac" or Pecora AC-20 or an approved equal, (interior use).

3. Joint Backing - Elastic close cell synthetic material, non-reactive with caulking materials and non-oily, approved by sealant manufacturer min. density 3.24 lbs per cubic foot. Use no asphalt or bitumen-impregnated materials with sealants.

C. INSTALLATION:

1. Thoroughly clean all joints, blow loose particles from joint. Material to be contacted by sealant shall be dry, fully cured and free from agents to prevent a good bond. Prime joint as recommended by sealant manufacturer. Mineral spirits, kerosene or paint solvents shall not be used to surface clean.

2. Install backing material in joints so that joint depth is 50% joint width, but a minimum of 1/4" deep. Backing shall be an approved closed cell rod.

3. Apply sealant in joints using pressure gun with nozzle cut to fit joint width, deposited in uniform continuous beads without gaps or air pockets.

4. Tool joints to required configuration within ten (10) minutes of sealant application. If masking materials are used, remove as soon as tooling is

complete. Sags, runs and smears are not permitted.

5. Color shall match adjoining surface or as selected by Architect.

DIVISION 8 DOORS & WINDOWS

08110 STEEL DOORS

A. SCOPE OF WORK

Includes installation of Dollar Tree ordered steel doors as indicated on the drawings and specified herein.

B. MATERIALS

All materials will be ordered by Dollar Tree for contractor installation.

C. INSTALLATION

1. Installation of steel doors shall be in accordance with manufacturers written instructions.

2. Follow door manufacturer's written instructions for all installation work. Replace doors that are hinge bound or damaged during installation.

3. All steel frames shall be painted per division 9 paint specs (color shown on drawings).

08111 STEEL FRAMES

A. SCOPE OF WORK

Includes installation of Dollar Tree ordered steel frames as indicated on the drawings and specified herein.

B. MATERIALS

All materials will be ordered by Dollar Tree for contractor installation.

C. INSTALLATION

1. Installation of steel frames shall be in accordance with manufacturers written instructions.

2. Bottom of door frames shall be flush with the top of the floor.

3. All steel frames shall be painted per division 9 paint specs (color shown on drawings).

08210 WOOD DOORS

A. SCOPE OF WORK

Includes installation of Dollar Tree ordered wood doors as indicated on the drawings and specified herein.

B. MATERIALS

All materials will be ordered by Dollar Tree for contractor installation.

C. INSTALLATION

1. Fitting

a. Fit doors with width by planeing and for height by sawing. Undercut for carpets.

I. 1/2" from bottom.
II. 1/8" maximum from top.
III. Bevel lock and hinge edges.
IV. Undercut for carpet.

b. Seal all job site cut surfaces with two (2) coats of clear sealer before final door hanging.

2. Installation of Doors - Install in accordance with door manufacturer's written instruction. Undercut as required.

3. All wood doors shall be painted per division 9 paint specs (color shown on drawings).

D. ADJUST & CLEAN

Replace or rehang doors which are hingebound and do not swing or operate freely. Refinish or replace doors damaged during installation.

08410 ALUMINUM STOREFRONT DOORS & FRAMES

A. SCOPE

1. Includes labor, materials and equipment for the installation of aluminum doors, frames and windows as indicated on the drawings and specified herein.

2. Consult drawings for sizes, design and construction details.

B. MATERIALS

1. Aluminum doors and frames shall be products of the Kawneer Company or approved equal.

2. Doors, Frames and Glazing Members

a. Extruded aluminum not less than .125 inches in thickness, except that door glazing moldings may be .050 inches thick. Aluminum alloy shall be 6063-T5.

b. Fastenings shall be of aluminum alloy or stainless steel.

c. Doors shall be of mechanical fastening and electric arc Sigma welded. Welding shall be at unexposed junction of rails and stiles. The welds shall have deep penetration without creating blemishes on exposed surfaces.

d. Hardware shall be furnished and installed by door manufacturer. Doors are to be single acting.

Hardware is to be as follows:

1)	Glass Stops	Square for 9/16” infill, interior screw applied glass stop with silicone seal
2)	Push-Pulls	Architects Classic Hardware “CO-9 Pull and CP-II Push Bar”
3)	Door Closers	Norton 7501 BF Surface Closer with Back-check and w/ adjustable hold open
4)	Hinging	KawneerTop, Bottom and Intermediate (4-1/2”x 4”) Butt Hinge
5)	Locking	MS 1850 Deadbolt 3-point Lock, with 4016 Top Bolt and 4056 Bottom Bolt

6)	Thresholds	Kawneer Standard Threshold (1/2” x 4”) aluminum mill finish
7)	Weathering	Sealair bulb polymeric weathering in Door frames, adjustable bottom rail sweep with EPDM blade and adjustable astragal utilizing pile weathering with polymeric fin at meeting stiles.

e. Glazing stops shall be snap-in extruded aluminum type with neoprene bulb-type glazing, without exposed screws. Exterior sides shall be lock-in tamper proof type.

f. Door stops shall be applied to the frame with concealed fastenings with vinyl insert for weather proofing and door silencing.

3. Finish of Aluminum shall be clear anodized. Thresholds shall be clear anodized.

4. Fabrication: Assemble members as detailed employing concealed anchoring devices, brackets, reinforcing for hardware, etc., to provide mechanical hairline water-tight joints.

5. Weatherstripping shall be provided on three sides of all doors with metal-backed pile cloth installed in the door and/or frame.

6. Aluminum Doors shall be Kawneer 350 Entrances or equal unless shown otherwise on drawings. Storefront Frames shall be Kawneer TRIFAB 451T framing system or equal unless shown otherwise on drawings.

C. INSTALLATION

Aluminum work shall be made water-tight and secured in place, plumb and in true alignment by the use of concealed fastening devices in accordance with details as shown on the drawings. Where components are jointed, they shall be accurately cut and fitted in a tightly closed joint. Caulking shall be installed where required in order to secure a water-tight condition. Thresholds shall be set in grout. Anchor frames with 3/8" diameter stainless steel wedge anchors spaced 18" o.c.

D. CLEANING

Remove protective coatings and wash all aluminum in strict accordance with manufacturer's recommended practice. Do not use abrasive or caustic cleaning agent.

08710 DOOR HARDWARE

PART 1 – GENERAL

A. SCOPE OF WORK

Includes installation of Dollar Tree ordered door hardware, thresholds, & weatherstripping as indicated on the drawings and specified herein.

B. RELATED SECTIONS

1. Section 08110 – Steel Doors.

2. Section 08111 – Steel Frames.

3. Section 08140 – Aluminum Storefront Doors & Frames.

4. Section 8200 – Wood Doors

C. QUALITY ASSURANCE

1. Manufacturers and model numbers listed in the hardware sets portion of this specification are for the purpose of establishing a standard of quality. Similar products by approved manufacturers that are equal in design, function and quality will be acceptable.

2. The hardware manufacturer shall be a recognized firm regularly engaged in the manufacturer and sale of finished hardware items.

3. Provide hardware for fire rated openings that complies with the requirements of NFPA 80 and authorities having jurisdiction. Provide only items of door hardware that have been tested and listed by UL, FM, Warnock-Hersey or other testing organizations acceptable to the authorities having jurisdiction.

4. All hardware shall be the requirements set forth in the American with Disabilities Act (ADA) and state and local handicapped codes.

D. DELIVERY, STORAGE, AND PROTECTION

1. Package each item individually. Label and clearly identify each package with item nomenclature and door opening. Correlate all making and opening numbers to match the hardware schedule.

2. The General Contractor is to provide a secure, locked storage area for all items delivered to the jobsite.

3. The General Contractor shall inventory all items delivered to the jobsite within forty-eight hours and advise the supplier immediately of any shortages.

E. WARRANTY

A. All hardware items are to be warranted for a period of one (1) year from date of substantial project completion. Door closers are to be warranted for five (5) years.

B. Warranty is to cover failure due to manufacturing defects or material failure only. It shall not cover abuse, vandalism, improper installation or maintenance. Defective materials are to be replaced at no cost to owner.

PART 2 – PRODUCTS

A. MANUFACTURERS

1. All materials will be ordered by Dollar Tree for contractor installation.

PART 3 – EXECUTION

A. INSTALLATION

1. Mount hardware units at heights indicated in following application publications, except as specifically indicated or required to comply with governing regulations and except as otherwise directed by Architect.

    a. "Recommended Locations for Builders Hardware for Standard Steel Doors and Frames" by the DOOR AND HARDWARE INSTITUTE

    b. WDMA Industry Standard I.S 1.A97, "Hardware Locations for Wood Flush Doors".

2. Install each hardware item in compliance with the manufacturer's instructions and recommendations. Where cutting and fitting is required to install hardware onto or into surfaces that are later to be painted or finished in another way, coordinate removal, storage, and reinstallation or application of surface protection with finishing work specified in the Division 9. Do not install surface-mounted items until finishes have been completed on the substrates involved.

3. Set units level, plumb, and true to line and location. Adjust and reinforce the attachment substrate as necessary for proper installation and operation.

4. Drill and countersink units that are not factory prepared for anchorage fasteners. Space fasteners and anchors in accordance with industry standards.

5. Set thresholds in sealant complying with requirements specified in Section 07900 – Caulking & Sealants.

6. Weatherstripping and Seals: Comply with manufacturer's instructions and recommendations to the extent installation requirements are not otherwise indicated.

B. ADJUSTING & CLEANING

1. Adjust and check each operating item of hardware and each door to ensure proper operation or function of every unit. Replace units that cannot be adjusted to operate freely and smoothly or as intended for the application made.

2. Where door hardware is installed more than one month prior to acceptance or occupancy of a space or area, return to the installation during the week prior to acceptance or occupancy and make final check and adjustment of all hardware item in such space or area. Clean operating items as necessary to restore proper functions and finish of hardware and doors. Adjust door control devices to compensate for final operation of heating and ventilating equipment.

3. Clean adjacent surfaces soiled by hardware application.

08800 GLAZING

A. SCOPE OF WORK

Includes labor, materials, and equipment for the installation of all glass and glazing as indicated on the drawings and specified herein. Glazing shall meet the ANSI Glazing Code. Submit samples for approval.

B. QUALITY ASSURANCE

Acceptable Products PPG Sungate 500
Pilkington Energy Advantage
Viracon (Spandrel Coating if applicable)

Any contractor who intends to submit a bid using a product other than the approved products listed must submit for pre-qualification in writing seven (7) days prior to the bid date. Any contractor who fails to submit the product data & samples as requested will be subject to rejection.

C. STORAGE

Store in original packing, in a cool, dry area on supportive frames or platforms.

D. MATERIALS

1. Clear Low-E Insulated Glass
   a. Outdoor Lite: ¼" clear float glass, pyrolytic coated on 2nd surface (2)
   b. Gas Cavity: ½" air gas fill
   c. Indoor Lite: ¼" clear float glass
   d. Low-E (Pyrolytic) Coating: "Sungate 500" by PPG Industries, Inc. or "Energy Advantage" by Pilkington located on second surface (2).
   e. Performance Values:

Visible Light Transmittance	U-Value Winter	U-Value Summer	SHGC	Shading Coefficient	Outdoor Visible Light Reflectance
74%	.35	.35	.62	.71	17%

2. Clear Low-E Monolithic Glass (Storefront Door)
   a. Glass Lite: ¼" clear float glass, pyrolytic coated on 2nd surface (2)
   b. Low-E (Pyrolytic) Coating: "Sungate 500" by PPG Industries, Inc. or "Energy Advantage" by Pilkington located on second surface (2).
   c. Performance Values:

Visible Light Transmittance	U-Value Winter	U-Value Summer	SHGC	Shading Coefficient	Outdoor Visible Light Reflectance
82%	.68	.54	.70	.81	10%

3. Setting Blocks
   a. 1/4" thick neoprene.
   b. 1/4" lead plugs.

E. INSTALLATION

1. Install all glass in accordance with manufacturer's printed recommendations, and as detailed on the drawings. At completion of work, leave all glass in clean condition to satisfaction of the owner.

2. Furnish protection for material after it is in place. Remove broken, chipped or substandard material and replace at no cost to the owner.

3. Any leaks or defective work shall be immediately corrected by the manufacturer, this sub-contractor or the General Contractor, at no expense to the owner.

DIVISION 9 FINISHES

09250 GYPSUM BOARD

A. Product Delivery, Storage & Handling:

1. Delivery & Handling - Deliver materials to the project site with manufacturer's labels intact and legible, handle materials with care to prevent damage. Deliver fire-rated materials bearing testing agency label and required fire classification numbers.

2. Storage - Store materials inside cover, stack flat, off floor, in dry area. Stack wallboard so that long lengths are not over short lengths.

B. Job Conditions:

1. Environmental Conditions -

a. Temperature - During cold weather, in areas receiving wallboard installation, maintain temperature range between 55°F to 70°F for 24 hours before, during and after gypsum wallboard and joint treatment application.

b. Ventilation - Provide ventilation during and following adhesives and joint treatment application. Use temporary air circulators in enclosed areas lacking natural ventilation. Protect installed materials from drafts during hot, dry weather.

2. Protection - Protect adjacent surfaces against damage and stains.

C. Materials: (See Div. 7 for insulation)

1. Gypsum Wallboard -

a. Fire-rated Board, ASTM C-36, Type X, shall be 5/8" thick as indicated on drawings. Edges shall be tapered (SW). All board shall be fire-rated where used in fire walls and standard board in other walls.

b. Water-resistant Board, 5/8" W/R, as indicated on drawings and for toilets.

2. Fasteners - Screws shall be self-drilling, self-tapping, bugle head, for use with power driven tool. Type S shall be used for wallboard to sheetmetal application and Type G, for wallboard to wallboard application. Length for single layer or base layer application, Type S, shall be one inch (1") face layer of two-layer application, Type S shall be 1-7/8". Length for wood cabinets through single layer panels to steel studs shall be 1-5/8" type S, oval head.

3. Joint Treatment Materials (where required) -

a. Joint Tape - ASTM C-475, perforated tape.

b. Joint Compound - ASTM C-475, all purpose joint compound.

4. Laminating Adhesive - Manufacturer's recommendation for laminating wallboard, ASTM C-557.

5. Caulking - Non-hardening, permanently resistant synthetic rubber based acoustical sealant.

6. Metal Accessories - Corner beads shall be 1-1/8" x l-1/8" for crimping to any wallboard corner. Casing bead and trim shall be galvanized steel. Fascia sill molding shall be MM Corp. No. FSMD 58-50, FSMD-58-12 as required.

7. Wall Studs - galvanized, corrosion-resistant, studs to extend from floor to bottom of floor slab above. Use gauges called out on drawings. Provide runners at bottom and top, use continuous studs without splices. Studs manufactured by U. S. Gypsum or equal. Walls with studs going from floor slab to structure above unless noted otherwise. Walls shall be rotary hammered in place and anchored with lead drive pins. Studs shall be screwed off at top and bottom - not crimped.

D. Installation

1. Metal Stud Frame System

a. Metal studs and runners shall be of size shown on the plans or as specified herein. Align all partitions accurately so that frame systems are true to line and plumb.

b. Metal runners shall be securely attached to:

1) Concrete using cast-in-place or drilled-in anchors,

1/4" diameter x 1-1/4" long wedge anchors. Shot-in anchors are not acceptable.

2) Steel framing using bolts and No. 12 - SDST SS screws.

3) Spacing of anchors shall be a maximum of 32" o.c. Size of anchors shall be as approved but not less than 3/8" diameter.

c. Cut studs accurately to rest on bottom track and fully engaged ceiling track. Attach studs to runners with two (2) 3/8" pan head screws through one stud flange and runner flange at top and bottom of stud. End splices shall be provided by nesting one stud into another to a depth of at least 9". One flange of each stud must be in between two flanges of mating stud so that studs interlock. Fasten together with two 3/8" pan head screws in each flange. Locate each screw not more than 1" from ends of splice. Studs shall be accurately spaced and set plumb.

d. Studs shall be placed no more than 3" from abutting partitions, partition corners, and existing construction elements.

e. Double studs shall be placed in direct contact with door frame jambs and securely anchored to the jamb anchor clips with screw attachments. A horizontally cut-to-length runner with a web-flange bend at each end shall be placed in direct contact with the door frame studs with one positive attachment per flange, and securely anchored to the head anchor clip with screw attachment. At least one vertical stud shall be placed between the runner section over the door and ceiling runner, with the vertical stud(s) equally spaced across the door opening width.

f. When necessary to splice a stud, a lap of 8 inches shall be made in the stud and one positive attachment made in each flange. All studs shall be anchored to runner flanges with Type S pan head screws or other fasteners. This is not intended to direct the splicing of studs in walls in order to extend the allowable height of the stud.

g. Openings in partitions for windows, louvers, etc., shall have studs and runners positioned around these openings in the same way as for door openings, unless indicated otherwise on the design drawings.

E. Inspection:

1. Check framing for accurate spacing and alignment.

2. Verify that spacing of installed framing does not exceed maximum allowable for thickness of wallboard to be used.

3. Verify that frames are set for thickness of wallboard to be used.

4. Do not proceed with installation of wallboard until deficiencies are corrected and surfaces to receive wallboard are acceptable.

5. Protrusions of framing, twisted framing members, or unaligned members must be repaired before installation of wallboard is started.

F. Installation:

1. Installing Wallboard - Use wallboard of maximum lengths to minimize end joints. Stagger end joints when they occur. Abut wallboard without forcing. Neatly fit ends and edges of wallboard. Do not place butt ends against tapered edges. Support ends and edges of wallboard panels and where ends are back blocked and floated.

a. Single-Layer Wallboard shall be applied face out with long dimensions horizontal. All abutting ends and edges shall occur over stud flanges. Joints on opposite side of a partition shall occur on different studs. Screws shall be spaced 12" o.c. in the field of the board and 8" o.c. staggered along the vertical abutting edges.

b. Double Layer Wallboard shall be applied to base layer of gypsum wallboard with adhesive in accordance with manufacturer's instructions. Stagger joints of face layer and base layer a minimum of 10" apart. During application, maintain a uniform temperature between 55 degrees F and 70 degrees F, until completely dry. Provide adequate ventilation.

c. Mechanical Fasteners - Attach single layer of wallboard to framing with Type "G" screws. Minimum edge clearance from mechanical fasteners: 3/8". Stagger

mechanical fasteners opposite each other on adjacent ends or edges. Sand abutting ends or edges over support surface. Space screws 12" o.c. along ends or edges and field of wallboard at walls. Drive screws with positive clutch electric screwdriver.

d. Install ceiling access panels where shown on the drawings.

e. Expansion joints shall be provided as recommended by the Gypsum Panel Manufacturer.

f. All board shall be taped and filled.

09260 GYPSUM BOARD ASSEMBLIES

A. General

1. Consult Drawings for extent of work; see Finish Schedule.

2. Concealed Gypsum Board above acoustical ceilings shall be taped and all joints and holes sealed air tight.

B. Materials

1. General: The materials specified as follows are standard products of the United States Gypsum Company. Products manufactured by National Gypsum Company, Georgia-Pacific Company, or other manufacturers whose products full comply with the specification will be considered for approval.

2. Reinforcing Tape: Perf-A-Tape Reinforcing Tape.

3. Embedding Compound: USG Joint Compound-Taping.

4. Finishing Compound: USG Joint Compound-Topping.

C. Joint Treatment

1. Mixing: Joint compounds shall be mixed, if required, in strict accordance with the manufacturer's instructions.

2. Taping Embedding compound shall be applied in a thin uniform layer to all joints and angles to be reinforced. Apply tape immediately, centered over the joint, and seated into compound. Sufficient compound, approximately 1/64", must remain under the tape to provide proper bond. A skim coat shall immediately follow tape embedment but shall not function as a fill or second coat. Fold and embed tape properly in all interior angles to provide a true angle. Compound shall be completely dry prior to the application of the next coat.

3. Filling: Finishing compound shall be applied over the embedded coat filling the board taper flush with the surface; cover tape and feather out slightly beyond edges of the first coat. On joints with no taper, the fill coat shall cover the tape and feather out at least 4" on each side of the tape. Joint compound shall be completely dry prior to the application of finish coat.

4. Finishing: Finishing compound shall be spread evenly over and extend at least two inches beyond the fill coat on all joints and feathered to a smooth uniform finish. The finished joint shall not protrude beyond the plane of the surface. All taped angles shall receive a finish coat to cover the tape and taping compound, providing a true angle. Sanding shall occur following the final application of compound and, where necessary, between coats to provide a smooth surface ready for scheduled finish.

5. Filling and Finishing of Faster Depression: Joint compound shall be applied as the first coat to all fastener depressions. This followed with a minimum of two (2) additional coats of topping or all purpose finishing compound, leaving all depressions level with the plane of the surface.

6. Finish Trim

   a. Fill Coat: Joint compound shall be applied to all bead and trim and properly feathered out from the ground to the plane of the surface. Joint compound shall be completely dry prior to the application of next coat.

   b. Second Fill Coat: Apply in same manner as first coat, extending compound slightly beyond onto face of board. The compound shall be completely dry prior to application of finish coat.

   c. Finish Coat: Apply finish coat to all bead and trim and extending slightly beyond the second coat and properly feathered from the ground to the plane of surface. Sand finish coat as necessary to provide a flat smooth surface ready for scheduled finish.

C. Clean-Up

Protect adjacent finishes over-spray, spatters, etc., and remove mis-applied materials from floors and other surfaces scheduled to receive other finishes. Leave area broom clean.

09510 ACOUSTICAL CEILING

A. SCOPE OF WORK:

Includes all suspended acoustical ceilings, ceiling suspension systems and acoustical ceiling tiles. Refer to reflected ceiling plan.

B. QUALITY ASSURANCE:

1. Acceptable Manufacturer:

   a. Suspension System - Armstrong Prelude. 15/16" face exposed “T”, Intermediate Duty. White.

   b. Acoustical Ceiling
      Armstrong “Cortega”
      MINABOARD #769 – 24” x 48”
      Color - White

2. Ceilings:

   a. Fire Hazard Classification: Maximum flame spread, UL Class 25 of Federal Specification SS-S-118a.

   b. All ceiling tile shall have a limited 10 year warranty against visible sag. This warranty shall be based on a maximum of 104 Degrees F. and 90% relative humidity.

C. SUBMITTALS:

1. Maintenance Material - Provide 5% replacement allowance for each type of tile for maintenance purposes.

2. Samples - submit full size samples to illustrate range of appearance.

D. PRODUCT DELIVERY & STORAGE:

Deliver materials in original, unopened, protective packaging, with manufacturer's labels, indicating brand name, pattern, size and thickness. Store cartons open at each end.

E. MATERIALS:

1. Suspension Systems - White, lay-in 24" x 48", 15/16" exposed tee grid system, conforming to requirements of Intermediate Duty, to fit the specified ceiling units.

2. Main Tees, Cross Tees, Edge Molding and Concealed Members - Single web design, cold-rolled steel, minimum thickness of 0.020", electro-zinc coated and factory painted low sheen satin white.

3. Rough Suspension - Wire ties shall be 12 gage, galvanized annealed steel wire. Hanger clips shall be prefabricated metal clamps for fastening to steel joists. Carrying channels shall be l6 gage, 1-1/2", cold-rolled steel.

F. INSTALLATION:

1. Suspension Systems - ASTM C636.

2. Rough Suspension -

a. Hangers - Hanger clips shall be installed as recommended by manufacturer. Space hanger wires 4' o.c., each direction. Install additional hangers at ends of each suspension member at light fixtures, 6" from vertical surfaces. Do not splay wires more than 5" in a 4' vertical drop. Wrap wire a minimum of three (3) times horizontally turning ends upward.

b. Carrying Channels - Install with leveling clips to main structure for indirect hung suspension system.

c. Main and Cross Runners - Space main runners at 48" o.c., at right angle to carrying channel. Space cross runners at 2' o.c., depending on system used.

d. Wall Molding - Install wall molding at intersection of suspended ceiling and vertical surfaces where suspension grid is exposed. Miter corners where wall moldings intersect or install corner caps. Attach to vertical surface with mechanical fasteners.

3. Acoustical Units - Install in level plane, except where shown, in straight line courses. Place materials to bear all around on suspension members. Minimum width of border tiles shall be one-half (1/2) unit dimension. Do not checkerboard patterns. Refer to reflected ceiling plan shown on Drawings.

G. CLEANING:

Clean soiled or discolored unit surfaces after installation. Touch-up scratches, abrasions, voids and other defects in painted surfaces. Remove and replace damaged or improperly installed units.

09660 RESILIENT BASE

A. Scope of Work:

Furnish all labor, materials, services and equipment for a complete installation of floor and base as indicated on drawings, schedule of finishes and as specified herein.

B. Materials:

1. Base - Vinyl Wall base by Intregal or approved equal, 3/8” Radius, 6" high with cove stick. Color to be black.

2. Sheet Vinyl - Armstrong Connection Classic Corlon Series.

3. Adhesives - Water resistant type, as recommended by flooring manufacturer. Clean existing slab. Test for adhesion.

4. Accessories – Aluminum Cap Trim, Black vinyl reducer strips, as required. Submit samples.

5. Corners – Outside corners to be manufactured corners. Cut outside corners or base creased around outside corners will not be accepted.

C. Installation:

1. Remove grease, dirt and other substances from slab. Do not proceed with installation until surfaces are smooth, all holes and cracks filled. Use fillers in all areas to fill cracks and voids.

2. Apply waterproof adhesive and set base in accordance with manufacturer's specifications. Make joints and seams as inconspicuous as possible. Test samples for adherence to existing surfaces shall be conducted. Clean existing surfaces, as required. Do not checkerboard tile.

a. Set base straight and true in cement. Outside corners factory furnished and inside corners neatly formed at job.

3. Immediately before building is ready for acceptance, clean base, and accessories. All material shall be rolled until a firm bond has been obtained. Wax floors (1 coat) with commercial grade non-slip wax and power buff.

4. Turnover to Owner upon completion of the resilient flooring, an additional 5% of the material in its original unopened boxes.

09900 PAINT

PART 1 - GENERAL

A. SCOPE OF WORK:

1. Interior and exterior painting and all related clean-up and preparation as shown on the drawings and called out in this specification.

B. REFERENCES:

1. Steel Structures Painting Council (SSPC):

   a. SSPC-SP 1 - Solvent Cleaning.
   b. SSPC-SP 2 - Hand Tool Cleaning.
   c. SSPC-SP 3 - Power Tool Cleaning
   d. SSPC-SP5/NACE No. 1, White Metal Blast Cleaning.
   e. SSPC-SP6/NACE No. 3, Commercial Blast Cleaning.
   f. SSPC-SP7/NACE No. 4, Brush-Off Blast Cleaning.
   g. SSPC-SP10/NACE No. 2, Near-White Blast Cleaning.
   h. SSPC-SP11, Power Tool Cleaning to Bare Metal.
   i. SSPC-SP12/NACE No. 5, Surface Preparation and Cleaning of metals by Waterjetting Prior to Recoating.
   j. SSPC-SP 13 / NACE No. 6 Surface Preparation for Concrete.

C. COLORS & SAMPLES:

1. All colors shall be as shown on drawings.

D. QUALITY ASSURANCE:

1. All paint is to be delivered to the site in manufacturer’s labeled & sealed containers.

2. Paint exposed surfaces. If a color of finish, or a surface is not specifically mentioned, Architect will select from standard products, colors and sheens available

3. Do not paint prefinished items, concealed surfaces, finished metal surfaces, operating parts, and labels unless indicated.

E. DELIVERY, STORAGE, & HANDLING:

1. Delivery: Deliver manufacturer's unopened containers to the work site. Packaging shall bear the manufacturer's name, label, and the following list of information

   a. Product name, and type (description).
   b. Application and use instructions.
   c. Surface preparation
   d. VOC content
   e. Environmental issues

f. Batch date
g. Color number

2. Storage: Store and dispose of solvent-based materials, and materials used with solvent-based materials, in accordance with requirements of local authorities having jurisdiction.

3. Store materials in an area that is within the acceptable temperature range, per manufacturer's instructions. Protect from freezing.

4. Handling: Maintain a clean, dry storage area, to prevent contamination or damage to the coatings.

F. PROJECT CONDITIONS:

1. Maintain environmental conditions (temperature, humidity, and ventilation) within limits recommended by manufacturer for optimum results. Do not install products under environmental conditions outside manufacturer's absolute limits.

G. EXTRA MATERIALS:

1. Furnish extra paint materials from the same production run as the materials applied and in the quantities described below. Package with protective covering for storage and identify with labels describing contents. Deliver extra materials to Owner.

2. Furnish Owner with an additional one percent of each material and color, but not less than 1 gal or 1 case, as appropriate.

PART 2 - PRODUCTS

A. MANUFACTURER:

1. Sherwin Williams or approved equal.

B. MATERIALS:

1. Paints and Coatings: Unless otherwise indicated, provide factory-mixed coatings. When required, mix coatings to correct consistency in accordance with manufacturer's instructions before application. Do not reduce, thin, or dilute coatings or add materials to coatings unless such procedure is specifically described in manufacturer's product instructions.

2. Primers: Where the manufacturer offers options on primers for a particular substrate, use primer categorized as "best" by the manufacturer.

3. Coating Application Accessories: Provide all primers, sealers, cleaning agents, cleaning cloths, sanding materials, and clean-up materials required, per manufacturer's specifications.

4. Color: Refer to plans for paint colors.

C. INTERIOR PAINT SYSTEMS:

1. Roof Ladder, Columns below 12'-0" A.F.F. & Hollow Metal Doors & Frames
   Latex System:
   Semi-Gloss Finish (Low Odor – Zero VOC Finish):
   a. 1st Coat: S-W Pro Industrial Pro-Cryl Universal Primer, B66-310 Series (5-10 mils wet, 2-4 mils dry).
   b. 2nd Coat: S-W ProMar 200 Zero VOC Latex Semi-Gloss, B31-2600 Series.
   c. 3rd Coat: S-W ProMar 200 Zero VOC Latex Semi-Gloss, B31-2600 Series (4 mils wet, 1.7 mils dry per coat).

2. Wood Doors
   Latex System:
   Semi-Gloss Finish (Low Odor – Zero VOC Finish):
   a. 1st Coat: S-W Premium Wall and Wood Primer, B28W8111 (4 mils wet, 1.8 mils dry).
   b. 2nd Coat: S-W ProMar 200 Zero VOC Latex Semi-Gloss, B31-2600 Series.
   c. 3rd Coat: S-W ProMar 200 Zero VOC Latex Semi-Gloss, B31-2600 Series (4 mils wet, 1.7 mils dry per coat).

3. Plywood Employee Area Walls
   Latex System:
   Sherwin Williams Eg-Shell Finish (Low Odor – Zero VOC Finish):
   a. 1st Coat: S-W Premium Wall and Wood Primer, B28W8111 (4 mils wet, 1.8 mils dry).
   b. 2nd Coat: S-W ProMar 200 Zero VOC Latex Eg-Shel, B20-2600 Series.
   c. 3rd Coat: S-W ProMar 200 Zero VOC Latex Eg-Shel, B20-2600 Series (4 mils wet, 1.7 mils dry per coat).

   Benjamin Moore Eg-Shell Finish (Low Odor – Zero VOC Finish):
   a. 1st Coat: Ultra Spec® 500 Interior Latex Primer #N534 (MPI listed Product, Categories 50, 50-X, 149, 149-X)
   b. 2nd Coat: Ultra Spec® 500 Interior Eggshell Finish N538 (MPI Listed Product Categories 52, 52-X Green)
   c. 3rd Coat: Ultra Spec® 500 Interior Eggshell Finish N538 (MPI Listed Product Categories 52, 52-X Green)

4. Drywall
   Latex System:
   Sherwin Williams Eg-Shel Finish (Low Odor – Zero VOC Finish):
   a. 1st Coat: S-W ProMar200 Zero VOC Interior Latex Primer, B28W2600 (4 mils wet, 1.5 mils dry).
   b. 2nd Coat: S-W ProMar 200 Zero VOC Latex Eg-Shel, B20-2600

Series.

c. 3rd Coat: S-W ProMar 200 Zero VOC Latex Eg-Shel, B20-2600 Series (4 mils wet, 1.7 mils dry per coat).

Benjamin Moore Eg-Shell Finish (Low Odor – Zero VOC Finish):

a. 1st Coat: Ultra Spec® 500 Interior Latex Primer #N534 (MPI listed Product, Categories 50, 50-X, 149, 149-X)
b. 2nd Coat: Ultra Spec® 500 Interior Eggshell Finish N538 (MPI Listed Product Categories 52, 52-X Green)
c. 3rd Coat: Ultra Spec® 500 Interior Eggshell Finish N538 (MPI Listed Product Categories 52, 52-X Green)

D. EXTERIOR PAINT SYSTEMS:

1. CMU

Elastomeric System:

Flat Finish:

a. 1st Coat: S-W Loxon BlockSurfacer, A24W200 (50-100 sq ft/gal).
b. 2nd Coat: S-W ConFlex XL Elastomeric High Build Coating, A5-400 Series.
c. 3rd Coat: S-W ConFlex XL Elastomeric High Build Coating, A5-400 Series (16 mils wet, 7.5 mils dry per coat).

2. Downspouts, Gutter/Conductor Heads, Parapet Caps, Hoods, Canopies & Hollow Metal Doors & Frames

Latex System:

Semi-Gloss Finish:

a. 1st Coat: S-W Metalatex Acrylic Semi-Gloss, B42 Series.
b. 2nd Coat: S-W Metalatex Acrylic Semi-Gloss, B42 Series. (4 mils wet, 1.7 mils dry per coat).

3. Steel Lintels over Storefront

Latex System:

Semi-Gloss Finish:

a. 1st Coat: S-W Pro Industrial Pro-Cryl Universal Primer, B66-310 Series (5-10 mils wet, 2-4 mils dry).
b. 2nd Coat: S-W Metalatex Acrylic Semi-Gloss, B42 Series.
c. 3rd Coat: S-W Metalatex Acrylic Semi-Gloss, B42 Series. (4 mils wet, 1.7 mils dry per coat).

PART 3 - EXECUTION

A. EXAMINATION

1. Do not begin installation until substrates have been properly prepared; notify Architect of unsatisfactory conditions before proceeding. If substrate preparation is the responsibility of another installer, notify Architect of unsatisfactory preparation before proceeding.

2. Proceed with work only after conditions have been corrected and approved by all parties, otherwise application of coatings will be considered as an acceptance of surface conditions.

B. SURFACE PREPARATION

1. General: Surfaces shall be dry and in sound condition. Remove oil, dust, dirt, loose rust, peeling paint or other contamination to ensure good adhesion.

   a. Remove mildew before painting by washing with a solution of 1 part liquid household bleach and 3 parts of warm water. Apply the solution and scrub the mildewed area. Allow the solution to remain on the surface for 10 minutes. Rinse thoroughly with clean water and allow the surface to dry 48 hours before painting. Wear protective glasses or goggles, waterproof gloves, and protective clothing. Quickly wash off any of the mixture that comes in contact with your skin. Do not add detergents or ammonia to the bleach/water solution.

   b. Remove items including but not limited to thermostats, electrical outlets, switch covers and similar items prior to painting. After completing painting operations in each space or area, reinstall items removed using workers skilled in the trades involved.

   c. No exterior painting should be done immediately after a rain, during foggy weather, when rain is predicted, or when the temperature is below 50 degrees F (10 degrees C), unless products are designed specifically for these conditions. On large expanses of metal siding, the air, surface and material temperatures must be 50 degrees F (10 degrees F) or higher to use low temperature products.

2. Block (Cinder and Concrete): Remove all loose mortar and foreign material. Surface must be free of laitance, concrete dust, dirt, form release agents, moisture curing membranes, loose cement, and hardeners. Concrete and mortar must be cured at least 30 days at 75 degrees F (24 degrees C). The pH of the surface should be between 6 and 9, unless the products are designed to be used in high pH environments. On tilt-up and poured-in-place concrete, commercial detergents and abrasive blasting may be necessary to prepare the surface. Fill bug holes, air pockets, and other voids with a cement patching compound.
3. Drywall - Interior: Must be clean and dry. All nail heads must be set and spackled. Joints must be taped and covered with a joint compound. Spackled nail heads and tape joints must be sanded smooth and all dust removed prior to painting.

4. Galvanized Metal: Clean per SSPC-SP1 using detergent and water or a degreasing cleaner to remove greases and oils. Apply a test area, priming as required. Allow the coating to dry at least one week before testing. If adhesion is poor, Brush Blast per SSPC-SP7 is necessary to remove these treatments.

5. Steel: Structural, Plate, And Similar Items: Should be cleaned by one or more of the surface preparations described below. These methods are used throughout the world for describing methods for cleaning structural steel. Visual standards are available through the Society of Protective Coatings. A brief description of these standards together with numbers by which they can be specified follow.

   a. Solvent Cleaning, SSPC-SP1: Solvent cleaning is a method for removing all visible oil, grease, soil, drawing and cutting compounds, and other soluble contaminants. Solvent cleaning does not remove rust or mill scale. Change rags and cleaning solution frequently so that deposits of oil and grease are not spread over additional areas in the cleaning process. Be sure to allow adequate ventilation.

   b. Hand Tool Cleaning, SSPC-SP2: Hand Tool Cleaning removes all loose mill scale, loose rust, and other detrimental foreign matter. It is not intended that adherent mill scale, rust, and paint be removed by this process. Before hand tool cleaning, remove visible oil, grease, soluble welding residues, and salts by the methods outlined in SSPC-SP1.

   c. Power Tool Cleaning, SSPC-SP3: Power Tool Cleaning removes all loose mill scale, loose rust, and other detrimental foreign matter. It is not intended that adherent mill scale, rust, and paint be removed by this process. Before power tool cleaning, remove visible oil, grease, soluble welding residues, and salts by the methods outlined in SSPC-SP1.

   d. White Metal Blast Cleaning, SSPC-SP5 or NACE 1: A White Metal Blast Cleaned surface, when viewed without magnification, shall be free of all visible oil, grease, dirt, dust, mill scale, rust, paint, oxides, corrosion products, and other foreign matter. Before blast cleaning, visible deposits of oil or grease shall be removed by any of the methods specified in SSPC-SP1 or other agreed upon methods.

   e. Commercial Blast Cleaning, SSPC-SP6 or NACE 3: A Commercial Blast Cleaned surface, when viewed without magnification, shall be free of all visible oil, grease, dirt, dust, mill scale, rust, paint, oxides, corrosion products, and other foreign matter, except for staining. Staining shall be limited to no more than 33 percent of each square inch of surface area and may consist of light shadows, slight streaks, or minor discoloration caused by stains of rust, stains of mill scale, or stains of previously applied paint. Before blast cleaning, visible deposits of oil or grease shall be removed by any of the methods specified in SSPC-SP1 or other agreed upon methods.

   f. Brush-Off Blast Cleaning, SSPC-SP7 or NACE 4: A Brush-Off Blast Cleaned surface, when viewed without magnification, shall be free of all visible oil, grease, dirt, dust, loose mill scale, loose rust, and loose paint. Tightly adherent mill scale, rust, and paint may remain on the

surface. Before blast cleaning, visible deposits of oil or grease shall be removed by any of the methods specified in SSPC-SP 1 or other agreed upon methods.

g. Power Tool Cleaning to Bare Metal, SSPC-SP11: Metallic surfaces that are prepared according to this specification, when viewed without magnification, shall be free of all visible oil, grease, dirt, dust, mill scale, rust, paint, oxide corrosion products, and other foreign matter. Slight residues of rust and paint may be left in the lower portions of pits if the original surface is pitted. Prior to power tool surface preparation, remove visible deposits of oil or grease by any of the methods specified in SSPC-SP1, Solvent Cleaning, or other agreed upon methods.

h. Near-White Blast Cleaning, SSPC-SP10 or NACE 2: A Near White Blast Cleaned surface, when viewed without magnification, shall be free of all visible oil, grease, dirt, dust, mill scale, rust, paint, oxides, corrosion products, and other foreign matter, except for staining. Staining shall be limited to no more than 5 percent of each square inch of surface area and may consist of light shadows, slight streaks, or minor discoloration caused by stains of rust, stains of mill scale, or stains of previously applied paint. Before blast cleaning, visible deposits of oil or grease shall be removed by any of the methods specified in SSPC-SP1 or other agreed upon methods.

i. High- and Ultra-High Pressure Water Jetting for Steel and Other Hard Materials: SSPC-SP12 or NACE 5: This standard provides requirements for the use of high- and ultra-high pressure water jetting to achieve various degrees of surface cleanliness. This standard is limited in scope to the use of water only without the addition of solid particles in the stream.

j. Water Blasting, SSPC-SP12/NACE No. 5: Removal of oil grease dirt, loose rust, loose mill scale, and loose paint by water at pressures of 2,000 to 2,500 psi at a flow of 4 to 14 gallons per minute.

6. Wood: Must be clean and dry. Prime and paint as soon as possible. Knots and pitch streaks must be scraped, sanded, and spot primed before a full priming coat is applied. Patch all nail holes and imperfections with a wood filler or putty and sand smooth.

C. INSTALLATION

1. General: Apply all coatings and materials with manufacture specifications in mind. Mix and thin coatings according to manufacturer's recommendations.

2. Do not apply to wet or damp surfaces. Wait at least 30 days before applying to new concrete or masonry. Or follow manufacturer's procedures to apply appropriate coatings prior to 30 days. Test new concrete for moisture content.

3. Apply coatings using methods recommended by manufacturer.

4. Uniformly apply coatings without runs, drips, or sags, without brush marks, and with consistent sheen.

5. Apply coatings at spreading rate required to achieve the manufacturers recommended dry film thickness.

6. Regardless of number of coats specified, apply as many coats as necessary for complete hide, and uniform appearance.

7. Inspection: The coated surface must be inspected and approved by the Architect just prior to each coat.

D. PROTECTION

1. Protect finished coatings from damage until completion of project.

2. Touch-up damaged coatings after substantial completion, following manufacturer's recommendation for touch up or repair of damaged coatings. Repair any defects that will hinder the performance of the coatings.

DIVISION 10 SPECIALTIES

10440 INTERIOR SIGNAGE

A. SCOPE OF WORK

1. Install Dollar Tree ordered ADA Signs per drawings.

B. MATERIALS

1. General: All engraving shall be in accordance with requirements for the physically handicapped.

C. INSTALLATION

1. The exact location of mounting for each sign will be given to the Contractor on the job prior to installation.

2. Signs shall be installed in strict accordance with manufacturer's printed instructions and approved shop drawings. Install with screws.

10500 LOCKERS

A. SCOPE OF WORK

Install lockers ordered by Dollar Tree as required and as shown on the drawings.

B. MATERIALS

1. Lockers, trim and all components shall be the products of Penco Products, Inc. Equal products of Lyon or Medart which fully comply with these specifications.

2. Lockers shall be heavy duty all welded, factory assembled, stainless steel recesses handle, friction catch, padlock hasp, hatshelf located 9" down from top of the locker, one double prong ceiling hook, two single prong wall hooks, diamond-shaped ventilation perforations in door only, (no other ventilation), number plates with numbers 2-1/4" W x 1" H.

3. Gauges: 14 ga. Doors, 16 ga sides, tops, shelves, 18 ga. Backs.

4. Locker size: double tier, each compartment 12" x 12" x 12" high.

10810 TOILET ACCESSORIES

A. SCOPE OF WORK

This work includes installation of Dollar Tree ordered toilet room accessories, required to complete the project as indicated by drawings or specified herein.

B. MATERIALS

Acceptable Manufacturers and Products

1. Bobrick Washroom Equipment, McKinney Washroom Accessories, Bradley, A&J Washroom Accessories.

2. Accessories are shown on the drawings. See drawings for location and quantities.