*Journal of Agricultural & Food Industrial Organization*

*Volume* 5 2007 *Article* 10

SPECIAL ISSUE:
Explorations in Biofuels Economics, Policy, and History

# Technical and Financial Feasibility Analysis of Distributed Bioprocessing Using Regional Biomass Pre-Processing Centers

Joseph E. Carolan* Satish V. Joshi† Bruce E. Dale‡

*Michigan State University, j.e.carolan@att.net
†Michigan State University, satish@anr.msu.edu
‡Michigan State University, bdale@egr.msu.edu

Copyright ©2007 The Berkeley Electronic Press. All rights reserved.

# Technical and Financial Feasibility Analysis of Distributed Bioprocessing Using Regional Biomass Pre-Processing Centers*

Joseph E. Carolan, Satish V. Joshi, and Bruce E. Dale

## Abstract

Research indicates that large biorefineries capable of handling 5000-10000MT of biomass per day are necessary to achieve process economies. However, such large biorefineries also entail increased costs of biomass transportation and storage, high transaction costs of contracting with a large number of farmers for biomass supply, potential market power issues, and local environmental impacts. We propose a network of regional biomass preprocessing centers (RBPC) that form an extended biomass supply chain feeding into a biorefinery, as a way to address these issues. The RBPC, in its mature form, is conceptualized as a flexible processing facility capable of pre-treating and converting biomass into appropriate feedstocks for a variety of final products such as fuels, chemicals, electricity, and animal feeds. We evaluate the technical and financial feasibility of a simple RBPC that uses ammonia fiber expansion pretreatment process and produces animal feed along with biorefinery feedstock.

**KEYWORDS:** ethanol, biofuels, biomass pretreatment, distributed preprocessing, biomass supply chain

*Satish V. Joshi contact information: Email: satish@msu.edu, Phone: 517-432-9802, Fax: 517-432-1800.

## 1. Introduction

Biofuels for transportation have recently become topics of intense policy debate and action, due to a combination of (1) rapidly increasing global demand for fossil fuels and dwindling reserves, (2) sharply rising energy prices, (3) dependence on imports of crude oil from nations hostile to the U.S. or with unstable political environment, (4) concerns over global warming impacts of fossil fuels (5) high farm program costs and (6) efforts to promote sustainable rural development. Recent policy actions to promote biofuels include establishment of a "Renewable Fuels Standard" (RFS) of 7.5 billion gallons of renewable transportation fuels for 2012, under the Energy Policy Act of 2005. President Bush in his State of the Union Address on January 23, 2007, called for an enhanced alternative fuel use target of 35 billion gallons by 2017.

While ethanol from corn is expected to account for most of the US biofuel production in the short run, ethanol from lignocellulosic biomass is considered to be more promising from a sustainability perspective because of much larger quantities potentially available, significantly lower life cycle greenhouse gas emissions compared to grain ethanol (Sheehan et al., 2004; MacLean and Lave, 2003; Wu et al., 2006), widespread domestic feedstock availability, the potential to ameliorate the perceived conflict over food v/s fuel use of grains, and improve rural incomes by better utilization of marginal lands. Significant research and development effort has gone into technologies for conversion of lignocellulosic biomass into liquid transportation fuels, especially ethanol. More recent policy interventions are aimed at commercial production of cellulosic ethanol. For example, in February 2007, DOE announced that it will invest up to $385 million for six biorefinery projects over the next four years to help bring cellulosic ethanol to market (USDOE, 2007). The total investment in these facilities including industry cost share is more than $1.2 billion. Other investments in cellulosic biofuels bring the total to well over $4 billion.

A critical component of successful commercialization of cellulosic ethanol industry is a secure and reliable feedstock supply system. Ample feedstock should be available to biorefineries at the appropriate time and at competitive prices, while assuring reasonable, steady profits to the biomass suppliers. Developing a consistent, economically viable feedstock supply system requires addressing and optimizing diverse harvesting, storage, preprocessing, and transportation scenarios (USDOE, 2003). Research indicates that in order to achieve conversion process economies, large biorefineries capable of handling 5,000-10,000 tons of biomass per day are necessary. However, such large biorefineries also entail increased costs of biomass transportation and storage, high transaction costs of contracting with a large number of farmers for biomass supply, and monopsony market power vested with refineries. Furthermore, unless biomass suppliers

participate in adding value to their products, they are unlikely to benefit much from greatly increased cellulosic biofuels production.

We propose a network of regional biomass preprocessing centers (RBPC) that form an extended biomass supply chain feeding into a biorefinery, as a way to address these issues. The RBPC, in its mature form, is conceptualized as a flexible processing facility capable of pre-treating and converting biomass into appropriate feedstocks for a variety of final products such as fuels, chemicals, electricity, animal feeds. We evaluate the technical and financial feasibility of a simple RBPC that uses ammonia fiber expansion (AFEX) pretreatment process and produces animal feed along with biorefinery feedstock.

We find that the RBPC supply chain concept appears technically and financially feasible and RBPCs can operate financially successfully with gross margins (i.e. difference in prices of input feedstock and output pretreated biomass) of as low as $3.32/ton in the best case. RBPCs have several advantages over the traditional centralized, integrated biorefinery model from the point of view of both biomass producers and biorefineries. Because of lower feedstock and by-product transportation costs and cross-subsidization from other value added products, the proposed system is likely to result in lower minimum ethanol selling prices.

The rest of the paper is organized as follows. In the next section we provide a brief overview of lignocellulosic ethanol conversion process. In section 3 we summarize the research findings on economies of scale in biomass refining that conclude that optimal biomass refineries are likely to be large facilities. In section 4, we summarize the supply chain and organization issues arising from such large size biorefineries, followed by a discussion in section 5 on the proposed regional biomass preprocessing system. The advantages of distributed preprocessing over central preprocessing are discussed in section 6. Section 7 describes the technical set-up of a RBPC, which is followed by financial feasibility analysis. The last section presents the limitations of current analyses and discusses the implications of our findings.

## 2. Lignocellulosic biomass ethanol conversion process

Common lignocellulosic biomass feedstocks include dedicated energy crops such as switchgrass, miscanthus, and hybrid poplars, agricultural residues such as corn stover, forest and forest product residues, and cellulosic fractions of municipal solid waste. All biomass consists of three major components: cellulose, a polymer of glucose; hemicellulose, a polymer of five and six carbon sugars, mostly xylose; and lignin, a high molecular weight phenylpropane polymer. Each of these components contributes approximately one third by weight of plant biomass.

Two main pathways for converting biomass into fuels involve thermo-chemical and biochemical processes. Thermo-chemical processes are considered most promising for the production of Fischer-Tropsch diesels and hydrogen, while biochemical processing has been viewed as the most promising for ethanol production. Production of ethanol through biochemical processing consists of five main steps as shown in Figure 1: (a) feedstock collection and transport (b) pretreatment of feedstock (c) hydrolysis, aimed at depolymerizing cellulose and hemicellulose into their component sugars (saccharification); (d) fermentation to convert sugars into ethanol and (e) ethanol recovery.

The main technical challenges in biochemical conversion of lignocellulosic feedstocks to ethanol are hydrolysis of recalcitrant cellulose, fermentation of pentose sugars from hemicellulose, and system integration to achieve competitive production costs. Enzymatic hydrolysis with cellulase enzymes is considered the most promising method for cellulose hydrolysis; however, the enzyme costs are still high. The main purpose of feedstock pre-treatment is to improve accessibility of cellulose to enzymatic action and thereby reduce enzyme costs. A number of pretreatment alternatives are being considered which are discussed in more detail in section 5. Fermentation of hexose sugars using yeasts is a well established commercial process, but developing (through genetic modification) suitable micro-organisms for pentose sugar fermentation at a commercial scale has been a challenge. Genetically modified thermophilic bacteria and yeast are considered most promising because of their high conversion efficiency, relative high temperature and high solid concentration tolerance. Current processes hydrolyze about 63% of the cellulose into hexose sugars and convert 76% of pentose sugars into ethanol. The goal is to improve both efficiencies to above 95% (Lynd, 2004), thereby increasing the total yield of ethanol from biomass to about 110 gal/MT from the current 60 gal/MT.

Significant efforts are underway to improve the process economics and reduce capital costs by combining several of the process steps. In separate hydrolysis and fermentation (SHF), hydrolysis and fermentation of hexose and pentose sugars are carried out in separate vessels. Simultaneous saccharification and fermentation (SSF) systems can hydrolyze and ferment hexose sugars in the same vessel. Development of effective microorganisms will eventually permit simultaneous saccharification and co-fermentation (SSCF) of both hexose and pentose sugars. Finally, new processes are being designed to combine cellulase enzyme production, enzymatic hydrolysis and fermentation into a single unit operation called consolidated bioprocessing (CBP). Review of literature and pilot plant testing suggest that SHF and SSF are relatively close to commercialization, that SSCF may become possible in the near term, while CBP is the furthest from commercialization. U.S. Department of Energy (USDOE) has recently funded six

demonstration projects for commercial production of ethanol from cellulosic biomass (USDOE, 2007).

While the above process description focuses on a single product, namely ethanol, future biorefineries are likely to produce a range of co-products along with fuel ethanol, e.g. electricity, animal feed, fibers, organic chemicals such as succinic acid and biobased polymers. Lynd et al. (2005), in their strategic analysis of biorefineries list the advantages of integrated multi-product biorefineries. First, integrated biorefineries enable maximizing the value generated from heterogeneous feedstock, making use of component fractions. Second, revenues from high-value coproducts reduce the selling price of the primary product. Third, the economies of scale provided by a full-size biorefinery lowers the processing costs of low-volume, high-value coproducts, because common process elements are involved in producing fermentable carbohydrates, regardless of whether one or more products are produced, and coproduction can provide process integration benefits (e.g. meeting process energy requirements with electricity and steam cogenerated from process residues). We, however, focus our analysis on fuel ethanol production.

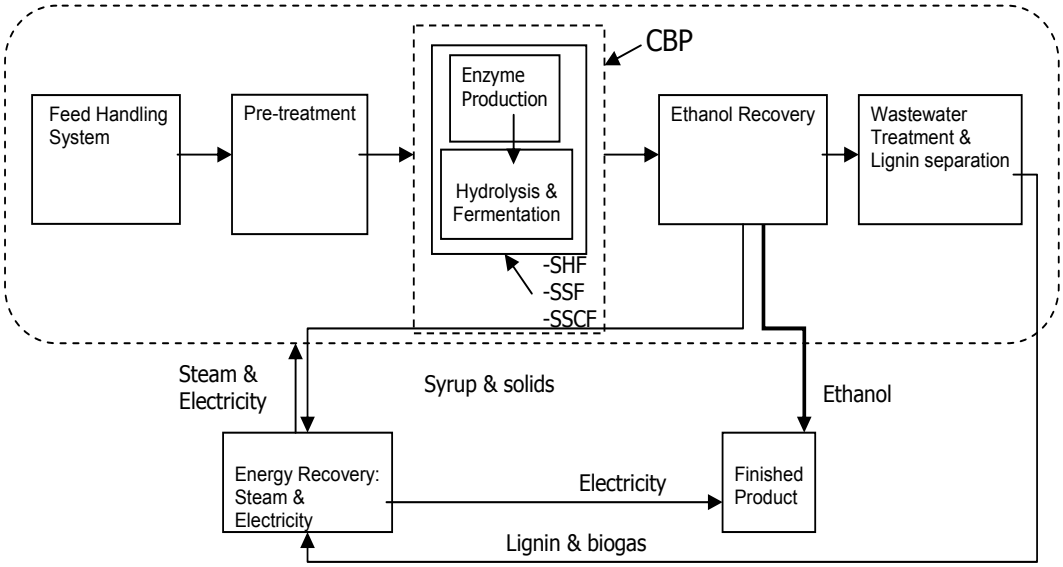


Figure adapted from Spatari (2007) (*SHF-separate hydrolysis and fermentation, SSF-simultaneous saccharification and fermentation, SSCF-simultaneous saccharification and co-fermentation, CBP- combined bioprocessing)*

**Figure 1: Process Model for Biochemical Conversion of Lignocellulose to Ethanol with Energy Recovery for Steam and Electricity Production.**

## 3. Economies of scale and optimal plant size in biorefineries

The optimum size of a biorefinery involves tradeoffs between economies of scale with larger plants and increased costs of feedstock transportation. Generally in process industries, the capital cost for equipment increases as a function of throughput according to the power law equation, with an exponent of around 0.6. At the same time, larger plant sizes also mean larger transportation distances for collecting bulky biomass.

National Renewable Energy Laboratory (NREL) has carried out detailed process modeling of lignocellulosic biomass conversion facilities using co-current dilute acid prehydrolysis followed by enzymatic saccharification and co-fermentation (SSCF) (Aden et al., 2002). The process design also includes feedstock (corn stover) handling and storage, wastewater treatment, lignin combustion, storage, and all other required utilities. The NREL process model uses scaling exponent of around 0.7, based on vendor quotes, and estimates the cost or the minimum selling price of ethanol as a function of plant size. The estimated non feedstock costs, i.e. processing and capital costs are shown in Figure 2. As can be seen, the non-feedstock costs for plant sizes below 2,000 TPD increase rapidly, indicating that the minimum economic plant size is likely to be around 2,000 TPD capacity. Increasing the plant size from 2,000 TPD to 10000 TPD reduces the non-feedstock costs by $0.19/gallon or by about 25%.

The collection distance is a function of the quantity of biomass that can be collected per acre, the fraction of farmland from which biomass can be collected and fraction of farmland dedicated to crops. The NREL study conservatively assumes a yield of 2 MT of corn stover per acre, 75% corn acreage, and 10% of acres are available for collection, and nominal feedstock cost of $30/ton to calculate the delivered feedstock costs of biomass at the plant for various plant sizes (Aden et al., 2002). These are also shown in Figure 2, along with total of feedstock and processing costs/gallon of ethanol. As can be seen the optimal plant size appears to be in the 6000-8000TPD range. Sensitivity analysis indicates that if 25% of corn acreage becomes available for corn-stover collection, the optimum plant size increases to 10000 TPD. Similarly any increase in per acre productivity or reduction in ton-mile transportation costs will also increase the optimal plant size.

Kaylen et al. (2000) develop a mathematical programming model to analyze the economic feasibility of producing ethanol from various lignocellulosic biomass materials, namely agricultural residues, energy crops, wood processing and logging residues in Missouri. They specifically analyze the tradeoffs between scale economies and transportation costs, and find that estimated NPV of the plant is maximized at a capacity of 4360 TPD, under the conservative assumption that only 10% of available biomass is used in the plant.

Any increase in LCB availability or reduction in unit transportation costs would further increase the optimal plant size. Tembo et al. (2003) in their investment appraisal of bioethanol industry assume a facility with a capacity of 100 million gallons per year or 3800 dry tons of biomass per day as being optimal.

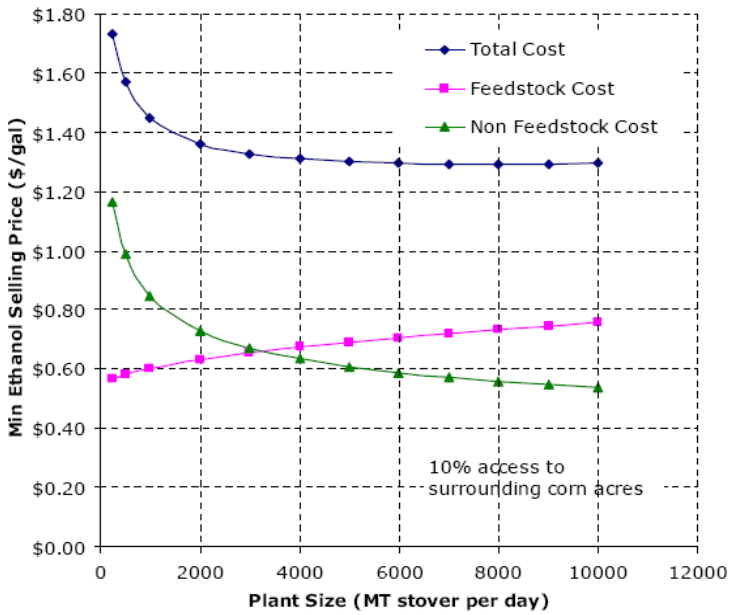


**Figure 2. Ethanol Cost as a Function of Plant Size Assuming 10% Availability (Source: Aden et al., 2002)**

Hamelinck et al. (2005), in their detailed techno-economic performance analyses of lignocellulosic ethanol plants in the short-middle and long term technology scenarios, assume plant sizes of 2000TPD, 5000TPD and 10000TPD for their short, middle and long term analyses respectively. These are based on their assessments of emerging technologies and required system integration. Lynd et al. (2005) in their strategic analyses of biorefineries, model biorefineries with capacities to handle 2200 dry tons per day, and 10000 dry tons per day as representative plants with near term technology and advanced technology, respectively.

These studies and discussions with industry experts suggest that future biorefineries are likely to be large facilities with capacities in the range of 5000-10000 TPD of biomass, if not larger. This scale is comparable in size to the largest U.S. corn wet mills. Archer Daniels Midland's Decatur, IL plant, for example, processes an estimated 15,500 dry tons of corn per day.

## 4. Supply chain and organizational issues

Such large biomass refineries face significant challenges in establishing appropriate supply chains. A biorefinery consuming 5000-10000 TPD of corn-stover per day would need to collect the annual output from 0.875-1.75 million acres of corn land assuming an availability of 2 tons of corn stover/acre. The collection area may not significantly lower in the case of dedicated energy crop based biorefineries because the higher expected annual biomass output of 5-7 tons/acre will be offset by the likely fragmented and spread out nature of energy crop acreage compared to corn acreage. Prior to investing in a biorefinery, arrangements have to be made to assure a reliable flow of feedstock. The logistics of feedstock production, harvest, storage, transport, and delivery will be challenging, due to the bulky nature of biomass, large geographical variations in biomass quality, especially if multiple feedstocks are procured, limited harvest windows requiring storage to ensure steady supply, conflicting demands on labor and machines at harvest, product degradation in storage, and combustibility. Compared to corn ethanol industry, which had well developed supply chains when corn-ethanol technology was being commercialized, cellulosic ethanol faces a much more difficult challenge.

Apart from the above mentioned technical and logistical problems, establishing biomass supply chains also requires attention to several organizational questions. Given the earlier discussion on scale economies in biorefineries, it is likely that the biorefinery industry will be characterized by regionally dominant, large capacity biorefineries collecting biomass from a large number of farmers in the surrounding area. Under this scenario, a single buyer will likely monopolize localized markets. From the producer's perspective, there will be a large number of essentially undifferentiated sellers, especially if the biorefineries develop the capability to quickly quantify carbohydrate content in biomass and base their payment accordingly. The product is bulky, seasonal and difficult to transport. Although the effects of long term storage on biomass quality are not fully understood, research indicates that mid-range storage (90 – 120 days) under reasonable conditions degrades product quality minimally. Entry and exit barriers are high for dedicated energy crop producers, as significant costs are involved in converting crop land from its existing use, as well as for re-converting if the market for cellulosic biomass doesn't develop. Therefore, the biorefiners might be able to exert anti-competitive market power. However, for farmers supplying residues such as corn stover, there are few upfront capital requirements if existing harvesting and collection equipment can be used and hence barriers to entry and exit are relatively low.

There are also factors that could lead to the alternative conclusion, that biorefineries may not be able to exercise undue market power. The barriers to

entry and exit are huge, as the capital requirements for biorefineries are enormous, as are the costs of abandoning one. Once set up, the biorefinery needs to operate at high capacity utilization because of large fixed costs. Conversion of the facility as a whole to alternate uses is infeasible, although the components can be salvaged and employed elsewhere for a multi-plant firm. The threat of collective action by the sellers may keep the processor from being able to exert monopsony power as the producers can collectively threaten the financial viability of the biorefinery by storing or refusing to sell at all. In this case, the potential for asymmetric market power reverses, and lies in the hands of the suppliers.

This bilateral dependence between biomass suppliers and the biorefinery where trading parties are open to the potential of opportunism and 'hold-up' problem arises from asset specificity, i.e. investments in transaction specific assets. Both potential market power scenarios (i.e. market power residing with the biorefinery or with biomass producers) arise because there are appropriable quasi-rents on both sides of the exchange; quasi-rent being the difference in value between the high value specific use of an asset and its alternative lower value use. For dedicated energy crop producers, quasi-rent is the difference in value between the net feedstock price and the alternative use, which is essentially zero. For the by-product biomass producers, this would be the difference between selling the net feedstock price and doing nothing (the current situation). For the biorefinery quasi-rent is the value of operating as a cellulosic ethanol biorefinery and the salvage value (if any) of the facility. The existence of appropriable quasi-rents doesn't necessarily mean that one party or the other will unscrupulously capture these during the course of the transactions. According to Williamson, only a highly 'opportunistic' and self-serving firm, that believes that it can get away with it without negative repercussions, either to reputation or to future profits will act in this manner (Williamson, 1975). However, because of the potential for opportunistic behavior, both parties will be reticent to participate in this market.

Energy crop production and investments in conversion facilities are hence likely to suffer from the classic "chicken and egg" problem; farmers are unlikely to grow biomass in large enough quantities unless there is an assured market and acceptable prices, and investors are unlikely to invest in conversion facilities until adequate feedstock supplies at reasonable prices are assured. Under the circumstances, the biomass supply transactions are likely to be based more on long term, very detailed, 'more complete' contracts than spot markets. Further, due to economies of scale, and widely distributed feedstock production, biorefineries need to contract with a fairly large number of farmers leading more transaction costs. Supply cooperatives may be attractive since they allow a single contract between the co-operative and the biorefinery instead of with each individual producer. Alternatively, harvesting, collection and transportation can be handled by independent consolidators, with whom biorefineries can contract.

The questions remain as how best to economically co-ordinate these activities and provide proper incentives for the agents to participate and which channel configuration would be best suited for, creating value, reducing transaction costs, exploiting scale economies, and balancing market power issues. These organizational issues in biomass supply chain strategy will be central to successful industry development.

## 5. Regional biomass preprocessing centers

We propose a network of regional biomass processing centers (RBPC) to address many of these issues. The RBPC, in its mature form, is conceptualized as a flexible processing facility capable of pre-treating and converting various types of biomass into appropriate feedstocks for a variety of final products such as fuels, chemicals, electricity, animal feeds etc. as shown in Figure 3. It is envisioned that a number of such RBPC will form an extended biomass supply infrastructure feeding into large biomass ethanol refineries and other processing facilities.

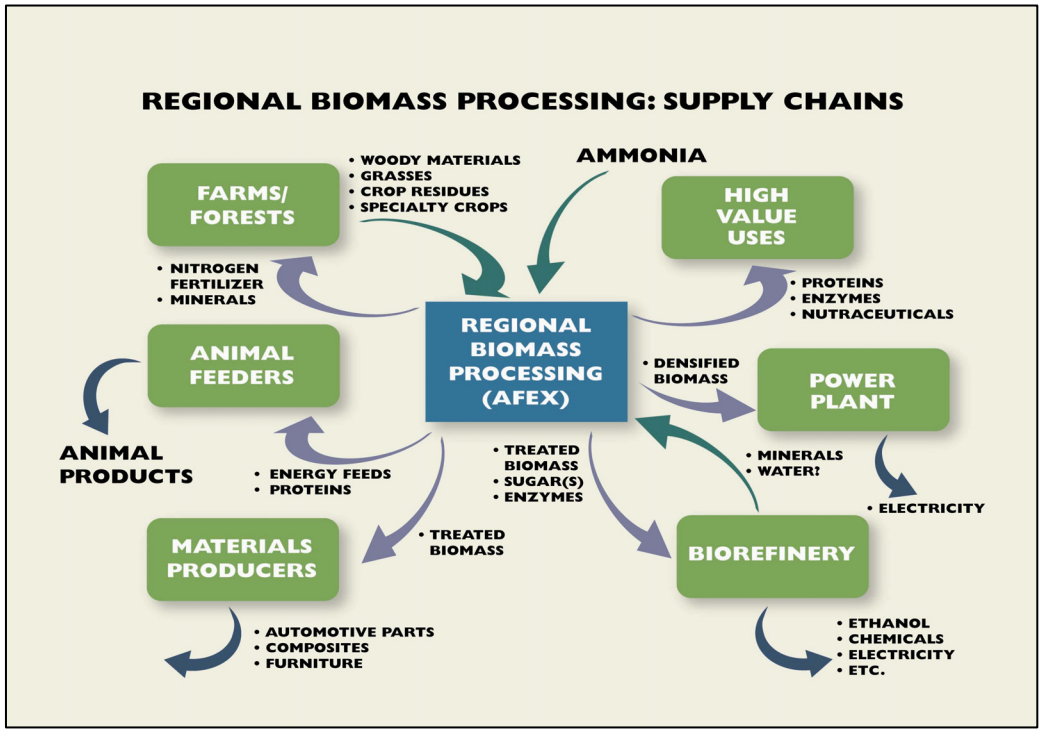


**Figure 3: The Concept of Regional Biomass Processing Center (RBPC)**

Biomass, when harvested, is characterized by its low density; varying quality in terms of moisture content, size, shape, density, and chemical makeup

and contamination with dirt and other undesirable foreign materials. Preprocessing is designed to improve biomass handling, transport, storage-ability, and potentially add value by making biomass more fit for final conversion to fuels, power, and chemicals. Preprocessing includes: cleaning, separating and sorting, chopping, grinding, mixing/blending, moisture control and potentially densifying. In most of existing literature, biorefineries have been typically designed to accept baled biomass and carry out all the preprocessing onsite at the biorefinery, followed by further processing stages of pretreatment, hydrolysis, fermentation, ethanol recovery. (e.g. Wooley et al., 1999; Aden et al., 2002; Hamelinck, 2005). We propose to strip both preprocessing and pretreatment steps out of the biorefinery and carry these out at RBPCs. A number of RBPCs will then supply pre-treated biomass to the biorefinery for further processing. While some prior research has looked at potential small scale on-farm preprocessing of biomass, mainly physical state alteration by chopping and grinding to improve transportability, we propose more advanced preprocessing, which will involve both physical transformation and chemical pre-treatment, in relatively large, intermediate, geographically distributed facilities.

The proposed RBPC is designed to accept baled biomass in trucks, from producers in the surrounding geographic region. These bales are unloaded, unwrapped and biomass is then shredded to appropriate size for further pretreatment. The goal in pretreatment is to make cellulose and hemicellulose more accessible to the enzymes that convert the carbohydrate polymers into fermentable sugars. A number of pre-treatment process options are currently being explored (Wyman et al., 2005). Eggeman and Elander (2005) carry out comprehensive process and economic analysis of five biomass pretreatment technologies, namely dilute acid, hot water, ammonia fiber expansion(AFEX), ammonia recycle percolation(ARP), and lime processes, embedded in a full bioethanol facility. They compare process parameters, capital costs, operating costs, minimum ethanol selling prices (MESP) for a bioethanol facility employing alternative pretreatment technologies. They find that the direct capital costs are similar for all the pretreatment technologies. Dilute acid process resulted in the lowest MESP closely followed by AFEX. The other three processes resulted in much higher MESP. Recently, Newton-Sendich et al. (2007) have updated these estimates with recent developments in the AFEX process which result in lower ammonia application rates, lower ammonia concentrations in the ammonia recycle stream and less capital intensive ammonia recovery. When these improvements are combined with consolidated bioprocessing, they estimate that MESP with advanced AFEX declines from $1.41/gal reported by Eggeman and Elander (2005), to as low as $0.81/gal.

We choose the AFEX pretreatment process for the RBPC model based on these results. AFEX is essentially pretreatment with hot (around 100º C)

concentrated aqueous ammonia. The mixture is maintained under pressure for a few minutes. Rapid pressure release from the reaction vessel completes the pre-treatment process. Under these conditions, ammonia reacts with lignin and causes depolymerization of lignin, cleavage of lignin-carbohydrate linkages, and hydrolyzes hemicellulose. Since lignin is one of the key factors affecting the enzymatic hydrolysis (Dunlap et al., 1976; Mooney et al., 1998; and Lee and Yu, 1995), removal of lignin lowers enzyme requirements. Liquid ammonia also causes cellulose swelling and a phase change in the crystal structure from cellulose I to cellulose III. Thus ammonia affects both micro-and macro-accessibility of cellulose to cellulase enzymes. The moderate temperatures and pH values in AFEX process minimize formation of sugar degradation products while giving high monomeric sugar yields. AFEX pretreatment gives close to theoretical glucose yields at relatively low enzyme loadings (<5 FPU per gram of biomass or 20 FPU/g cellulose) (Dale, 1986; Dale and Moreira, 1982; Holtzapple et al., 1991; Dale et al., 1996; Moniruzzaman et al., 1997; Foster et al., 2001). Increases in glucan conversion by about six fold and xylan conversion by almost 23 fold with AFEX pretreatment, compared no-pretreatment have been reported (Teymouri et al., 2005).

Apart from technical performance and economic competitiveness, the AFEX process has other advantages compared to other pre-treatment processes. First, unlike other pre-treatment processes which result in wet pretreated biomass, AFEX treated biomass remains relatively dry and inert, and hence it is more easily storable and transportable. In comparison, acid pretreated biomass needs neutralization. Moreover, chopping and grinding prior to AFEX treatment increases the bulk density of the biomass from 4-6 $lb/ft^3$ to 8-12$lb/ft^3$ which helps reduce transportation costs to the biorefinery. AFEX treated biomass can also be pelletized to further improve bulk density and handling properties, and initial trials at Michigan State University suggest that the density and other properties of pellets of AFEX treated biomass are better than pellets of untreated biomass (Marshall, 2007). Pelletized biomass flows like cereal grains and can use the existing well-developed handling infrastructure for grains. Hence AFEX pretreatment has advantages in supply chain logistics.

Second, AFEX treatment significantly improves the animal feed value of biomass, for the same reasons that make it a better feedstock for the biorefinery; i.e. the pretreatment improves the digestibility of biomass by ruminant animals both by breaking the lignin seal and disrupting the crystalline structure of cellulose. Table 3 compares the feed properties of AFEX treated corn-stover and switchgrass with other common feeds[1]. As can be seen, AFEX treated corn stover

[1] The data on AFEX treated corn-stover and switchgrass are from Dale (2007a), while data for other feeds are from the animal feed value worksheets from North Dakota State University (Schroeder, 1997).

has a crude protein level of 10% of dry matter (similar to 15% moisture shelled corn), and a net energy (NEL) of 0.86 Mcal / lb (similar to whey or barley). AFEX treated switchgrass has a crude protein level of 12% of dry matter (similar to soyhulls), and a net energy (NEL) of 0.87 Mcal / lb (similar to barley and wheat gluten). Unlike the products from the other pretreatment processes, AFEX treated biomass can hence potentially be sold as a feed supplement for ruminant animals without any additional drying or processing. Further, controlled amounts of ammonia can be left in the AFEX pretreated biomass which can further add to its nutrient value.

**Table 1: Nutrient Analysis of Animal Feeds**

| Animal Feed | Crude Protein (% DM) | Net Energy (NEL)(Mcal/lb) | Dry Matter (%) |
|---|---|---|---|
| Oat mill coproduct | 3.9 | 0.34 | 92 |
| Potatoes, raw | 8.9 | 0.85 | 91 |
| Corn, shelled -high-moisture | 9.5 | 0.90 | 74.4 |
| Beet pulp | 9.7 | 0.81 | 91 |
| ***AFEX treated corn stover*** | ***10*** | ***0.86*** | ***85*** |
| Corn, shelled (15.5%) | 10 | 0.90 | 88 |
| Sorghum or milo | 10.4 | 0.84 | 89 |
| Wheat | 11.3 | 0.89 | 89 |
| ***AFEX treated switchgrass*** | ***12*** | ***0.87*** | ***85*** |
| Soyhulls | 12.1 | 0.80 | 90 |
| Barley | 12.8 | 0.87 | 89 |
| Oats | 13 | 0.80 | 89 |
| Whey, dried | 13 | 0.85 | 93 |

Third, the option value of being able to sell AFEX pretreated biomass as an intermediate animal feed product increases the bargaining power of the pre-treatment facility *vis a vis* the biorefinery, and can counteract the monopsony power of the biorefinery. However, this bargaining power can be exploited by biomass producers only if they have an ownership stake in the pre-treatment facility. As detailed later, the estimated capital costs of pre-treatment facilities are relatively small compared to fully integrated biorefineries, and hence the probability of producer owned (through co-operatives or partnerships) pretreatment facilities is higher.

Fourth, the ability to convert biomass into animal feed at the RBPC instead of at the main biorefinery can also potentially reduce costs associated with transporting animal feed product back to the farms. However, these transport cost savings depend on the geographical distribution of animal feeding operations and biomass producers relative to the RBPCs and the biorefinery.

## 6. Other potential benefits from distributed biomass pretreatment

Apart from the above benefits specific to AFEX pretreatment in a RBPC, the concept of distributed preprocessing, regardless of the pre-treatment process chosen, has other potential advantages over centralized preprocessing at the biorefinery.

Distributed preprocessing can potentially reduce overall supply chain costs. Because chopping and grinding carried out prior to pretreatment nearly doubles the bulk density of biomass, a two stage collection system where the raw baled biomass from a smaller collection area is first transported to the RBPC, pretreated into more uniform and denser feedstock, and then transported to the central biorefinery may be less costly. However, actual cost savings are a function of the additional costs of handling the feedstock twice, and spatial distribution of the biomass sources relative to the biorefinery and the transportation infrastructure. RBPCs can also be designed to serve as appropriately designed, intermediate storage facilities that can reduce spoilage and deterioration of biomass compared to open on-farm storage. Further, RBPC locations can be chosen to ensure all weather access, so that the biorefinery can draw uniformly from the inventory at the RBPCs even during winter months. Because of high fixed costs, high capacity utilization is critical for financial success of a biorefinery, and on-field storage can be problematic in areas with poor access during some seasons. Distributed preprocessing can also reduce local environmental impacts of biorefineries, e.g. traffic congestion and associated air quality effects, and odor from stored biomass. Distributed preprocessing facilities can also be designed to receive different local feedstocks and mix them appropriately to deliver uniform quality feedstock in terms of composition, size, density, moisture etc. to the biorefinery. In fact, research has shown that growing a mixture of grasses instead of a single variety of grass may increase the biomass energy yield per acre by as much as 238% (Tilman et al., 2007). In view of these advantages, Colusa Biomass Energy Corporation for its upcoming rice-straw to ethanol biorefinery in California, is setting up a two stage collection process with three satellite storage facilities (without any preprocessing), each with a collection radius of about 17 miles (Kotrba, 2007).

The feedstock handling and pretreatment technologies are characterized by near constant returns to scale unlike the subsequent ethanol production steps which are characterized by high returns to scale. Stripping out the constant returns to scale processing steps from the main refinery and organizing them as RBPC can hence further improve economies of scale in the main biorefinery. At the same time, employing the RBPC approach enables building even larger capacity biorefineries with the same capital investment, to better exploit these economies of scale. The overall MESP can hence potentially be lower.

RBPCs in their mature form are visualized as facilities that can accept different biomass such as agricultural and forest residues, and woody and herbaceous energy crops, carry out appropriate preprocessing and produce feedstocks for a number of other products such as electric power, chemicals, proteins, and fibers for composites and other applications. The additional feedstock and product mix flexibility can potentially reduce the cost of the biorefinery feedstock through cross-product subsidization.

Distributed preprocessing facilities acting as intermediaries can potentially reduce the transaction costs of contracting in establishing the supply chain for the biorefinery, as the biorefinery needs to contract with a limited number of RBPCs instead of a much large number of farmers. The effect on the total systemic contracting costs is uncertain. The smaller number of contracts per entity in this two stage contracting process may facilitate better monitoring and lower costs; however, may simultaneously increase the total number of contracts. The additional complexity of animal feed sales by the RBPC may also increase transaction costs.

If some of the RBPCs supplying to a biorefinery are owned by farmers or independent entrepreneurs, it will reduce the monopsony power of the biorefinery. The product-mix flexibility of mature RBPCs can also improve the relative bargaining power of farmers, making them more willing to invest in dedicated energy crop production. At the same time, competition among a number of such independently owned RBPCs can also help alleviate biorefinery's concerns over collective market power of the farmers.

Since the RBPCs have the ability to treat biomass and sell as animal feed independent of the presence of biorefinery, it may be possible to gradually build the supply chain for the biorefinery where the RBPCs expand over time from animal feed production to biorefinery feedstock production to potentially other high value feedstock production. RBPCs can hence help ameliorate the 'chicken and egg' problem between biorefiners and biomass producers and encourage investments in biomass production and conversion.

## 7. Regional biomass preprocessing facility set up

While mature RBPCs are projected expected to be capable of producing feedstocks for a number of products, for our current initial feasibility analysis, we consider a simple RBPC that produces AFEX treated biomass that can either be used as an animal feed or as a feedstock for a biorefinery.

Figure 4 shows the set up of the RBPC as conceptualized. The facility consists of two main processing areas: feedstock handling, and AFEX treatment. The feedstock handling component is similar to the setup proposed by NREL in its assessment of future fully integrated biorefineries (Lynd et al., 2005). The

facility is designed to accept baled biomass in trucks, which are unloaded, unwrapped and then shredded to appropriate size for further pretreatment. The facility includes forklifts, storage slabs, conveyors and shredders as shown. The facility is also designed as intermediate feedstock storage facility and capital costs include adequate onsite, open storage capacity.

The design of the AFEX processing area is based on the model proposed by Newton-Sendich et al. (2007), where AFEX treatment is followed by ammonia recovery using distillation with quench condensation (Figure 5). The cost of ammonia and especially, the extent of ammonia recovery are major drivers of AFEX pretreatment costs (Holtzapple et al., 1992). In the proposed process setup 97% of the ammonia is recovered and reused. The major equipments at this stage include a first generation AFEX system using an extruder to carry out the reaction, NH3 stripping column, and condensers. Recent developments indicate that expensive extruders can be substituted with simpler, less expensive reactors (Dale, 2007b). In our initial analysis we conservatively assume an extrusions AFEX reactor but also analyze the implications of the improved, lower cost AFEX reactor technology.

We consider a biorefinery with a capacity of 10000 TPD which receives pre-treated biomass from a number of RBPCs. We model five different RBPCs with processing capacities of 4444, 2666, 1333, 888 and 666 TPD, which correspond to distributed supply chains where 3, 5, 10, 15 or 20 RBPCs, respectively, supply pretreated biomass to this biorefinery. In determining these RBPC capacities, we assume that 25% of the pre-treated biomass from these RBPCs will be sold as animal feed. We derive the sizes/capacities of various equipment, operating parameters, and process input requirements (i.e. heat, electricity, ammonia, water, etc) using engineering estimates and an ASPEN simulation model of an integrated biorefinery initially developed by NREL and subsequently used by several researchers. (Aden et al., 2002; Eggeman and Elander, 2005; Newton-Sendich et al., 2007), by essentially separating out the feedstock handling and pre-treatment operations from the biorefinery and making appropriate changes to material balances, and energy flows.

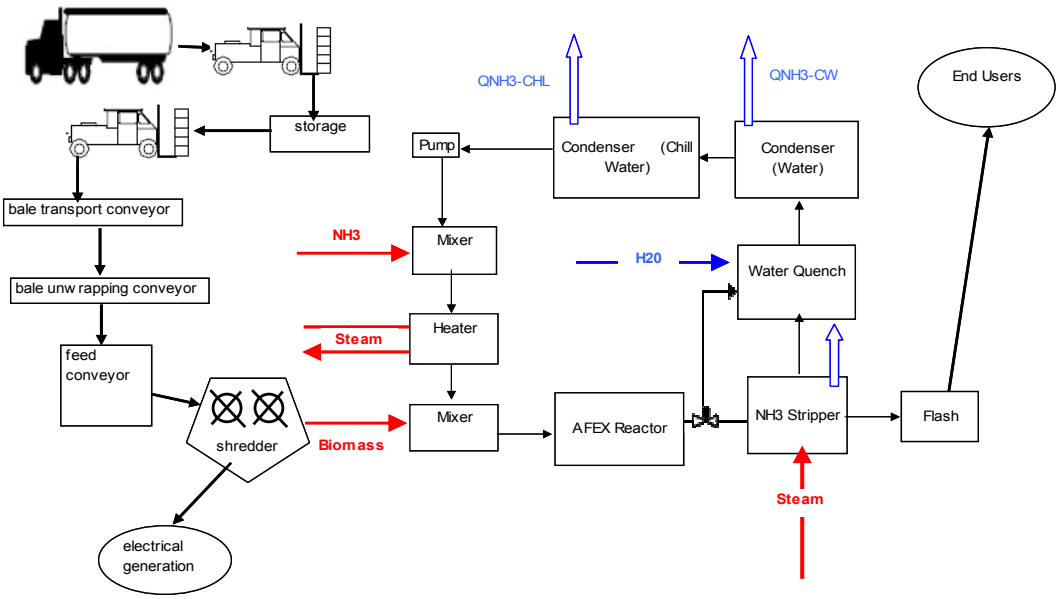


**Figure 4: Setup of Regional Biomass Preprocessing Facility.**

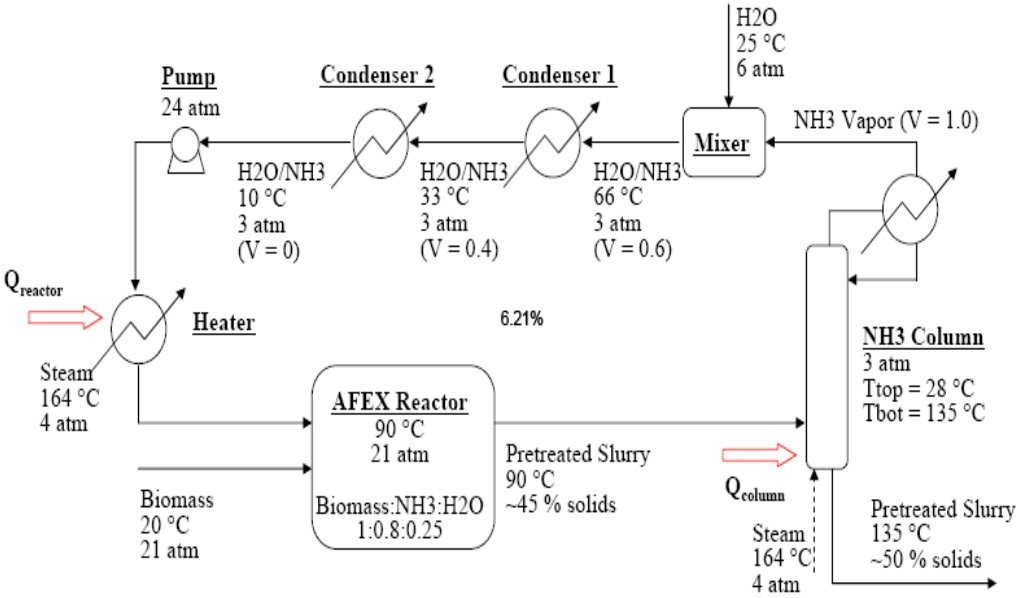


**Figure 5: AFEX Pretreatment and Ammonia Recovery**

The estimated capital costs of different capacity RBPCs are shown in Table 2. As can be seen, the capital costs range from $9.07 million for a RBPC with 666 TPD capacity to $36.80 million for 4,444 TPD capacity. Pretreatment facilities for AFEX and ammonia recovery account for roughly 50% of the capital costs. Feedstock storage facilities account for $0.34-2.28 million. The table also shows that RBPCs exhibit increasing returns to scale.

**Table 2: Capital Costs of RBPC of Various Capacities ($ 1000)**

| | **Facility Size TPD** | | | | |
|---|---|---|---|---|---|
| **Processing Area** | **4,444** | **2,666** | **1,333** | **888** | **666** |
| Feedstock Handling | 8,436 | 5,854 | 3,613 | 2,740 | 2,258 |
| Pretreatment | 19,210 | 13,029 | 7,704 | 5,666 | 4,560 |
| Other | 9,151 | 6,250 | 3,746 | 2,782 | 2,257 |
| Total | 36,796 | 25,133 | 15,063 | 11,189 | 9,074 |
| Total cost $ / ton capacity | 8.28 | 9.43 | 11.30 | 12.60 | 13.63 |

## 8. Financial analysis

We build detailed annual cash flow models for RBPCs of these capacities. The cash flow model includes revenues, capital costs, operating costs and taxes. We estimate the capital costs, operating parameters such as capacity factor, downtime, backup requirements, etc., and process input costs using the ASPEN simulation model. The procedures used for estimating the prices of the primary input parameters (feedstock, steam, ammonia and electricity), and the output products are discussed below. We use standard engineering/business heuristics for estimating other variable costs, SG&A (Selling, General and Administration) expenses, and annual cost escalation factors.

The key assumptions used in the analysis are summarized in Table 3. We assume no external financing, and use after tax return on investment (ROI) as the primary performance measure. Income tax rate of 39% is assumed. We assume a project life of twelve years, where initial capital expenditure occurs in the first two years (1/3 first year) and the plant operates for 10 years. All capital is straight line depreciated over the ten year period. We assume that a minimum of 12% ROI is required, and use 12% as a discount factor for net present value calculations.

The key variable of interest is the minimum price that a biorefinery would need to pay for the AFEX treated biomass, to the RBPC in order for the RBPF to achieve a 12% ROI (or equivalently, zero NPV with a discount rate of 12%). We solve the model to calculate this minimum price under different scenarios and compare them.

**Table 3: Summary of Key Assumptions**

*Assumptions common to all scenarios*

- Feedstock: Switchgrass with 20% moisture;
- Capital
  - Capital expenditure begins two years prior to startup with 1/3 outlaid in initial year, and the remaining 2/3 the following year;
  - 10 year straight line depreciation;
- Constant output prices ($2007)
- Ammonia
  - Loading 0.3 kg ammonia / kg dry biomass;
  - 97% recycle rate
- Costs ($ 2007)
  - Feedstock: $30 per dry ton
  - Ammonia: $530 per ton
  - Steam: $9.596 per 1,000 lbs.
  - Electricity: $0.062 per kWh
- Income tax rate 39%

*Assumptions that vary across scenarios*

- Input capacities vary corresponding to 3, 5, 10, 15 or 20 distributed pre-treatment facilities that feed into a single 10,000 ton biomass per day biorefinery
- Different capacity factors (online %)
  1) 95% (fully utilized capacity),
  2) 50% (only operates 6 months a year)
- Different Animal feed scenarios
  - $98.47 per ton and animal feed is 25% of sales volume
  - $73.05 per ton and animal feed is 25% of sales volume
  - No animal feed sales

### *8.1 Input parameters*

*Biomass input*: Although the RBPF is conceptualized as being capable of handling a range of biomass, we limit the current analysis to corn stover and switchgrass as feedstocks because corn stover and switchgrass appear to be the sources of biomass that show the greatest potential for early implementation. Although these two feedstocks have slightly different composition, technical configurations and economic simulation results are very similar. Therefore, we present the results for switchgrass only. We assume a delivered feedstock cost of $30/ton in line with the Department of Energy targets for feedstock price (USDOE, 2005). While this price might appear unrealistically low, based on current estimates of delivered costs of biomass feedstocks, improvements in yields and technologies for harvesting and transportation are expected to bring down costs. This price level may also be attainable in areas with low land rents or

CRP lands where supply costs are mainly driven by harvesting and collection costs (i.e. forage crops as opposed to dedicated energy crops). In any case, the financial feasibility of the RBPC is driven mostly by its margin over feedstock costs.

*Steam*: Steam used for process heat is the second largest operating cost factor in a RBPC. We assume that the RBPC has access to an external source of steam and do not include steam generation in our facility model. We assume a base year delivered price of steam at $9.596 per 1,000 lbs, based on actual delivered prices of a steam supplier (WE Energies, 2007). These steam prices are projected to escalate at the rate of 1.5% annually in the financial analyses. However, considering the potential for remote locations for some of these pre-treatment centers, it may be necessary to assess the option of including a steam co-generation as part of the technical configuration of each facility. Adding steam generation will increase the initial capital investment, but not likely to affect the overall financial results notably, because the steam cost we consider is full delivered average cost covering variable and capital costs.

*Ammonia:* As noted before, ammonia is the chemical agent that breaks down lignin-carbohydrate linkages, hydrolyzes hemicellulose and depolymerizes lignin. These effects enhance micro- and macro- accessibility of the cellulose and reduce enzyme requirements. In this configuration a RBPC, 97% of the ammonia is recovered and recycled within the system. Therefore, only 3% of the total volume of ammonia required for this system needs to be injected regularly. Ammonia that remains in the final product, serves as a nitrogen source downstream for fermentation or as a value added component when it is utilized as ruminant animal feed. We use ammonia price of $530/ton based on the mean real price of anhydrous ammonia derived from the data series "Farm Prices for Anhydrous Ammonia" covering the period 1970-2006 from USDA - ERS, adjusted by the Agricultural Producer Price Index for Industrial Chemicals from the Bureau of Labor and Statistics. We assume price escalation of 2.42% per annum based on the projected PPI for industrial chemicals.

*Electricity*: Electricity accounts for roughly 2% of the operating costs of RBPCs. The assumed first year price of electricity of $0.062 per kWh, is average of the 2006 & 2007 retail price to industrial consumers in Michigan (USDOE-EIA, 2007).

### *8.2 Output parameters*

The only two markets included in this initial analysis are the livestock feed and pretreated biorefinery feedstock. There are other potential markets, including ground biomass as fuel for electricity generation, and high value products with additional processing, but these are not modeled. We estimate the price of AFEX

treated biomass as an animal feed using feed evaluation charts published by North Dakota State University (Schroeder, 1997). Basically these charts convert the percentage of dry matter, net energy and crude protein of feeds into corn and soybean equivalent composition. We estimate the projected feed prices of AFEX treated biomass by applying these relative compositions and the price of corn and soybeans. Our estimated price for AFEX treated biomass as animal feed for the year 2007 is $98.47/ton. As mentioned before, the price of AFEX treated biomass as a biorefinery feedstock is then calculated by the financial model as the minimum selling price that enables the biorefinery to earn an ROI of 12%. To be conservative, we assume that these output prices remain constant over the planning period even though the costs are escalating.

## 9. Results

The results of the financial analysis are summarized in Tables 4-9. Table 4 shows the estimated RBPF processing costs/ton of biomass input, which range from $13.82-$21.09/ton. More details on the processing costs are shown in Table 5. Assuming yield of 90 gallons of ethanol per ton of biomass at the biorefinery, the first year feedstock handling and pretreatment cost at the RBPC account for $0.15-$0.23/gallon of ethanol produced. The processing costs/ton decrease by 52% when the capacity of the RBPC increases from 666TPD to 4444TPD (i.e. by 667%), which suggest increasing returns to scale. The lower processing costs with increased size are mainly on account of lower electricity and labor costs, in addition to lower capital costs.

Table 6 shows the minimum selling price of AFEX treated biomass that the RBPC can charge the biorefinery that allows the RBPC to earn a return on investment of 12%. We analyze three different scenarios; first where the RBPC sells 25% of the pretreated biomass as animal feed at the price of $98.47/ton; second where the RBPC sells 25% of the pretreated biomass as animal feed at the price of $73.05/ton; and third where the RBPC sells all the biomass received as feedstock to the biorefinery. The results are shown in columns 2-5 of Table 6. At these price levels, the sale of pretreated biomass as animal feed cross-subsidizes biorefinery feedstock sales and lowers its minimum price. For example, for the 4444 TPD capacity RBPC, the minimum selling price of treated biomass declines from $52.24/ton when all pretreated biomass is sold as biorefinery feedstock, to $36.84/ton (i.e. reduction of 30%) when 25% of treated feedstock is sold at $98.47/ton animal feed as shown in Table 6. The extent of cross-subsidization in the best case is such that the net pre-treatment costs are only $6.84/ton biomass or $0.076/gal of ethanol. In other words, this cross-subsidization can reduce the MESP at the biorefinery by as much as $0.17/gal. Even if the animal feed price declines to $73.05/ton, the minimum biorefinery feedstock price is lower at

$45.31/ton compared to $52.24/ton in the case with no animal feed sales. However, as the size of RBPC reduces, the extent of cross-subsidization reduces because of increased processing costs/ton. The degree of cross subsidization clearly depends on the feedstock price relative to the animal feed value. Table 7 shows the sensitivity of the minimum selling price of pretreated biomass to changes in feedstock prices, and it is evident that cross subsidization declines when feedstock costs increase. Obviously any increase in the fraction of pre-treated biomass sold as animal feed at these prices, will further increase the level of cross subsidization, and if feasible, the RBPC is better off with selling all of the pretreated biomass as animal feed. Our assumption however is that the local demand for animal feed is limited relative to the capacity of the RBPC, and in general, the quantity demanded as feedstock for ethanol/fuel production far exceeds the quantity demanded as animal feed. We choose 25% animal feed sales mainly as an indicative scenario.

**Table 4: RBPC Processing Costs per ton Biomass Input (95% Online)**

| # RBPFs | Capacity TPD | Capital Cost per ton | Operating Cost per ton | Sales, General and Administration Cost per ton |
|---|---|---|---|---|
| 3 | 4,444 | $2.39 | $10.83 | $0.60 |
| 5 | 2,666 | $2.72 | $11.37 | $0.81 |
| 10 | 1,333 | $3.26 | $12.55 | $1.32 |
| 15 | 888 | $3.63 | $13.72 | $1.80 |
| 20 | 666 | $3.93 | $14.88 | $2.28 |

**Table 5: RBPC Operating Costs ($/ton)**

| RBPC Capacity TPD→ Operating Cost Item ↓ | 4,444 | 2,666 | 1,333 | 888 | 666 |
|---|---|---|---|---|---|
| Electricity | $1.13 | $1.42 | $2.17 | $2.91 | $3.65 |
| Ammonia | $6.08 | $6.08 | $6.08 | $6.08 | $6.08 |
| Steam | $2.80 | $2.80 | $2.80 | $2.80 | $2.80 |
| Water | $0.01 | $0.01 | $0.01 | $0.01 | $0.01 |
| Maintenance & Repairs | $0.50 | $0.57 | $0.68 | $0.76 | $0.82 |
| Labor | $0.20 | $0.34 | $0.68 | $1.02 | $1.36 |
| Misc. Operating Expenses | $0.11 | $0.11 | $0.12 | $0.14 | $0.15 |
| Total Operating Expenses: | $10.83 | $11.34 | $12.54 | $13.72 | $14.88 |

**Table 6: Minimum Selling Price of AFEX Treated Biomass to Biorefinery ($/ton) (95% online)**

| Animal feed scenario:→ RBPF capacity TPD↓ | 25% @ $98.47/ton | 25% @ $73.05/ton | No Feed Sales |
|---|---|---|---|
| 4,444 | $36.84 | $45.31 | $52.24 |
| 2,666 | $38.87 | $47.34 | $53.77 |
| 1,333 | $42.90 | $51.37 | $56.79 |
| 888 | $46.32 | $54.79 | $59.36 |
| 666 | $49.45 | $57.92 | $61.71 |

**Table 7: Sensitivity of Minimum Selling Price of AFEX Treated Biomass to Changes in Feedstock Price ($/ton) (95% Online)**

| Feedstock price | $45/ton | | $55/ton | | $65/ton | |
|---|---|---|---|---|---|---|
| % sold as animal feed (@98.47/ton)→ RBPF capacity↓ | 25% | 0% | 25% | 0% | 25% | 0% |
| 4,444 | 60.21 | 69.77 | 75.79 | 81.64 | 91.37 | 93.15 |
| 2,666 | 62.24 | 71.30 | 77.82 | 82.98 | 93.41 | 94.67 |
| 1,333 | 66.27 | 74.32 | 81.85 | 86.00 | 97.43 | 97.69 |
| 888 | 69.69 | 76.88 | 85.27 | 88.57 | 100.86 | 100.26 |
| 666 | 72.82 | 79.23 | 88.40 | 90.92 | 103.99 | 102.61 |

Table 8 shows the sensitivity of the results to lower capacity utilization, i.e. if the RBPC were to operate at 50% on-line. As can be seen the minimum selling price of AFEX treated biomass increases by 11% to 30% depending upon the RBPC size and animal feed price. Because ammonia accounts for a considerable portion of the processing costs, the performance of the RBPC is sensitive to ammonia recovery rates. For example, reduction in ammonia recovery from the assumed 97% to 90% will increase the minimum selling price of pretreated biomass (with no animal feed sales) by 19.8% to 23.4% for RBPCs of capacity 666 TPD and 4444 TPD respectively.

Recent developments indicate that expensive extrusions reactor for AFEX can be substituted with simpler, less expensive reactors (Dale, 2007b). We analyze the case where this new technology is adopted. The estimated new capital costs of the RBPCs as well as per ton costs are shown in column 2 of Table 9. The results of financial analyses in terms of minimum selling price of pre-treated biomass are shown in columns 3-5. The minimum selling price reduces by $2.71 to $5.28/ton as a result of this improved technology.

**Table 8: Minimum Selling Price of AFEX Treated Biomass to Biorefinery ($/ton) (50% Online)**

| Animal Feed Scenario:→ RBPF Capacity TPD↓ | 25% @ $98.47/ton | 25% @ $73.05/ton | No Feed Sales |
|---|---|---|---|
| 4,444 | $44.89 | $53.36 | $58.28 |
| 2,666 | $48.11 | $56.58 | $60.70 |
| 1,333 | $54.16 | $62.63 | $65.24 |
| 888 | $59.06 | $67.54 | $68.92 |
| 666 | $63.41 | $71.89 | $72.18 |

**Table 9: Minimum Selling Price of AFEX Treated Biomass to Biorefinery - No FIBEX Reactor ($/ton) (95% Online)**

| RBPF capacity TPD↓ | Animal Feed Scenario:→ Capital Cost $ 1000 ($/ton) ↓ | 25% @ $98.47/ton | 25% @ $73.05/ton | No Feed Sales |
|---|---|---|---|---|
| 4,444 | 21,651 (1.41) | $33.22 | $41.69 | $49.53 |
| 2,666 | 15,070 (1.63) | $34.87 | $43.34 | $50.76 |
| 1,333 | 9,283 (2.01) | $38.30 | $46.77 | $53.34 |
| 888 | 7,012 (2.28) | $41.33 | $49.81 | $55.62 |
| 666 | 5,757 (2.49) | $44.17 | $52.64 | $57.74 |

In summary, the analyses indicate that RBPCs can be financially successful with gross margins (i.e. difference in prices of input feedstock and output pretreated biomass) as low as $3.32/ton in the best case. However gross margins have to be as high as $31.71/ton in the worst scenario of smallest size RBPC coupled with no animal feed sales.

## 10. Discussion

The above analyses are subject to several caveats and limitations. First, the animal feed value of AFEX treated biomass is based on laboratory analyses of nutrient value. Animal feeding trials are being planned. The presented best-case results depend critically on the actual field performance and acceptability of AFEX treated biomass as animal feed. However, we also present the worst case where none of the AFEX treated biomass is sold as animal feed. Our analysis assumes that AFEX treated biomass can be stored without any loss in quality and is transportable in conventional vehicles. We do not consider the potential fire hazard associated with storing and transporting pre-treated biomass.

The optimized processing parameters (e.g. shredding energy, ammonia loading, AFEX treatment temperature and pressure) and feed/market value of AFEX treated biomass and hence its market value may differ across different biomass feedstocks. We treat these differences as minor and do not explicitly model them in our analyses.

The effects of stripping out the pre-treatment processes out of the biorefinery in terms of equipment re-configuration, material and energy flow changes, processing costs, capital costs and economies of scale need to be considered in analyzing the overall techno-economic feasibility of the proposed system. We propose qualitatively that these changes are likely to be favorable, because the biorefinery can be larger with the same capital investment and more efficient due higher economies of scale. However, we do not assess these effects quantitatively. The scope of the current analysis is limited only to the feasibility of the RBPC as a stand alone facility. Similarly, cost savings from the proposed RBPC system compared to a central biorefinery system, specifically savings in biomass transport costs and animal feed product transport costs depend on the geographical distribution of animal feeding operations and biomass producers relative to the RBPCs and the biorefinery. We only point out these potential savings without quantifying them. Location specific analyses are necessary to estimate these costs.

Subject to the above limitations, the RBPC supply chain concept appears technically and financially feasible. It has several potential advantages over the traditional centralized, integrated biorefinery model, both from the point of view of biomass producers as well as biorefineries. The proposed system is likely to result in lower minimum ethanol selling prices because of lower feedstock and by-product transportation costs, higher returns to scale, better capacity utilization and cross-subsidization from other value added products. It can also ameliorate potential market power and hold-up problems due to high investments in transaction specific assets by both parties. Lesser number of contracts between RBPCs and biorefineries can potentially reduce transaction costs for the biorefinery. While a number of ownership structures for the RBPCs are possible, namely vertical integration with biorefineries, ownership by independent operators, farmer supply co-operatives, and RBPCs as independent or farmer owned franchises, some form of farmer ownership will help counteract the market power of biorefineries. If the policy goal is to enable rural producers to get a higher share of the value addition from the emerging biofuel industry, promoting farmer owned feedstock supply co-operatives can help.

Future research should aim at location specific feasibility analyses of such distributed biomass preprocessing, more quantitative analyses of the value chain costs and cost savings, techno-economic analyses of more complex RBPCs which supply pre-processed feedstocks for a variety of industries, and rigorous comparative analysis of various contracting arrangements. Research is also needed to address the other limitations of the current study discussed above.

**11. References:**

Aden, A., M. Ruth, K. Ibsen, J. Jechura, K. Neeves, J. Sheehan, B. Wallace, L. Montague, A. Slayton, and J. Lukas. "Lignocellulosic Biomass to Ethanol Process Design and Economics Utilizing Co-Current Dilute Acid Prehydrolysis and Enzymatic Hydrolysis for Corn Stover." NREL/TP-510-32438, Golden, CO, 2002.

Dale B. E. Author's estimates based on laboratory measurements of nutrient value of AFEX treated biomass, 2007a.

Dale B. E. Author's estimates based on recent designs of AFEX reactors, 2007b.

Dale, B.E. "Method for Increasing the Reactivity and Digestibility of Cellulose with Ammonia." US Patent 4,600,590. 1986.

Dale, B. E. and M. J. Moreira. "A Freeze-Explosion Technique for Increasing Cellulose Hydrolysis." *Biotechnology and Bioengineering Symposium* 12 (1982):31-43.

Dale, B. E., C. K. Leong, T. K. Pham, V. M. Esquivel, I. Rios, and V. M. Latimer. "Hydrolysis of Lignocellulosics at Low Enzyme Levels: Application of the AFEX Process." *Bioresource Technology* 56(1996):111-116.

Dunlap, C. E., J. Thomson, and L. C. Chiang. "Treatment Processes to Increase Cellulose Microbial Digestibility." *AIChE Symposium Series* 72(1976):58.

Eggeman T. and R. Elander. "Process and Economic Analysis of Pretreatment Technologies." *Bioresource Technology* 96(2005):2019-2025.

Foster, B. L., B. E. Dale, and J. B. Doran-Peterson. "Enzymatic Hydrolysis of Ammonia-Treated Sugar Beet Pulp." *Applied Biochemistry and Biotechnology* 91(2001):269-282.

Hamelinck, C., G. van Hooijdonk, and A. Faaij. "Ethanol from Lignocellulosic Biomass: Techno-Economic Performance in Short-, Middle- and Long-term." *Biomass and Bioenergy* 28(2005):384-410.

Holtzapple, M. T., J. Jun, G. Ashok, S. L. Patibanadala, and B. E. Dale. "Pretreatment of Switchgrass by Ammonia Fiber Explosion (AFEX)." *Applied Biochemistry and Biotechnology* 28/29(1991):59-74.

Holtzapple, M.T., J. E. Lundeen, R. Sturgis, J. E. Lewis, and B. E. Dale. "Pretreatment of Lignocellulosic Municipal Solid-Waste by Ammonia Fiber Explosion (AFEX)." *Applied Biochemistry and Biotechnology* 34(1992):5-21.

Kaylen M., D. L. Van Dyne, Y. Choi, M. Blasé. "Economic Feasibility of Producing Ethanol from Lignocellulosic Feedstocks." *Bioresource Technology* 72(2000):19-32.

Kotrba, R. "The Rumpelstiltskin of Rice Straw." *The Ethanol Producer Magazine*, Aug 2007, pp. 1-4.

Lee, D. and A. H. C. Yu. "Evaluation of Cellulase Recycling Strategies for the Hydrolysis of Lignocellulosic Substrates." *Biotechnology and Bioengineering* 45(1995):328–336.

Lynd, L. R., D. Wyman, D. Johnson, R. Landucci, and M. Laser. "Strategic Biorefinery Analysis: Analysis of Biorefineries." Subcontract Report NREL/SR-510-35578, October 2005. Available at http://www.nrel.gov/docs/fy06osti/35578.pdf

Lynd, L. R. *Prospects for Fuel Derived from Biomass as a Major Transportation Sector Energy Carrier*. Transportation Research Board (TRB) Meeting, TRB Session 700, February 11, 2004.

Marshall, D. "Pelletiztion of AFEX Treated Biomass." Presentation at the Department of Chemical Engineering, Michigan State University, Sept 18, 2007.

MacLean, H. L., and L. B. Lave. "Evaluating Automobile Fuel/Propulsion System Technologies." *Progress in Energy and Combustion Science* 29(2003):1-69.

Moniruzzaman, M., B. S. Dien, and B. Ferrer. "Ethanol Production from AFEX Pretreated Corn Fiber by Recombinant Bacteria." *Biotechnology Letter* 18(1997):985-990.

Mooney, C.A., S. D. Mansfield, M. G. Touhy, and J. N. Saddler. "The Effect of Initial Pore Volume and Lignin Content on the Enzymatic Hydrolysis of Softwood." *Bioresource Technology* 64(1998):113-119.

Newton-Sendich E., M. Laser, S. Kim, H. Alizadeh, L. Laureano-Perez, B. E. Dale, and L. R. Lynd. "Recent Process Improvements for the Ammonia Fiber Expansion (AFEX) Process and Resulting Reductions in Minimum Ethanol Selling Price." Working paper, Department of Chemical Engineering, Michigan State University, 2007.

Schroeder, J.W. "Economic Evaluation of Alternative Feeds for Dairy." North Dakota State University Extension Service. 1997. Available at http://www.ag.ndsu.edu/disaster/drought/economicevaluationalternatives.html

Sheehan, J., A. Aden, K. Paustian, K. Kendrick, J. Brenner, M. Walsh, and R. Nelson. "Energy and Environmental Aspects of Using Corn Stover for Fuel Ethanol." *Journal of Industrial Ecology* 2004(3-4):177-146.

Spatari, S. *Biomass to Ethanol Pathways: Evaluation of Lignocellulosic Ethanol Production Technologies.* Unpublished Ph.D. thesis, Department of Civil and Environmental Engineering, University of Toronto. 2007.

Tembo, G., F. Epplin, and R. Huhnke. "Integrative Investment Appraisal of a Lignocellulosic Biomass-to-Ethanol Industry." *Journal of Agricultural and Resource Economics* 28(2003):611-633.

Teymouri, F, E. Laureano-Perez, H. Alizadeh, and B. Dale. "Optimization of the Ammonia Fiber Explosion (AFEX) Treatment Parameters for Enzymatic Hydrolysis of Corn Stover," *Bioresource Technology* 96(2005):2014-2018.

Tilman, D., J. Hill, and C. Lehman. "Carbon-Negative Biofuels from Low-Input High-Diversity Grassland Biomass." *Science* 314*(*2006):1598-1600.

US Department of Energy. "DOE Selects Six Cellulosic Ethanol Plants for Up to $385 Million in Federal Funding." Press Release 4827. Washington, DC: US Department of Energy, February 28, 2007. Available at http://www.doe.gov/news/4827.htm

US Department of Energy. *Roadmap for Agriculture Biomass Feedstock Supply in the United States.* DOE/NE ID 11129, 2003.

US Department of Energy. Energy Information Agency, "Table 5.6.B. Average Retail Price of Electricity to Ultimate Customers by End-Use Sector, by State, Year-to-Date through April 2007 and 2006." *Electric Power Monthly,* April 2007. Office of Coal, Nuclear, Electric and Alternate Fuels, U.S. Department of Energy, Washington, DC 20585. Available at http://www.eia.doe.gov/cneaf/electricity/epm/epm_sum.html

WE Energies "Standard Firm Service (Ag1)". Available at http://www.we-energies.com/business_ new/ steam/ steam_pricing.htm and WE Energies "Steam InflationCalc". Available at http://webapps.we-energies.com/productcompare/selection_page.cfm? steam=Y .

Williamson O.E. *Markets and Hierarchies: Analysis and Antitrust Implications.* New York 1975.

Wooley, R. M. Ruth, J. Sheehan, K. Ibsen, H. Majdeski, and A. Galvez. "A. Lignocellulosic Biomass to Ethanol Process Design and Economics Utilizing Co-Current Dilute Acid Prehydrolysis and Enzymatic Hydrolysis Current and Futuristic Scenarios." NREL/TP-580-26157, July 1999.

Wu, M., M. Wang, and H. Huo. "Fuel-Cycle Assessment of Selected Bioethanol Production Pathways in the United States." Energy Systems Division, Argonne National Laboratory, ANL/ESD/06-7, 2006. Available at http://www.transportation.anl.gov/pdfs/TA/377.pdf

Wyman, C.E., B.E. Dale, R. T. Elander, M. Holtzapple, M. R. Ladisch, and Y. Y. Lee. "Coordinated Development of Leading Biomass Pretreatment Technologies." *Bioresource Technology* 96(2005):1959-1966.