REQUEST FOR PROPOSAL

Construction

R20-143MZ

Date issued: September 29, 2020

2C EXTENSION PRE-OVERLAY CONCRETE

THE CITY OF COLORADO SPRINGS

The City of Colorado Springs requests Fixed Unit Price proposals, as detailed in this Request for Proposal (RFP), for 2C Extension Pre-Overlay Concrete.

It is the intent of this RFP to award multiple concrete repair contracts for pre-overlay repairs at various locations throughout the City of Colorado Springs.

The City will select those firms deemed to be most highly qualified to perform the concrete repair work in accordance with the evaluation criteria.

The City will hold mandatory pre-proposal meetings. Any firm that wishes to submit a proposal must attend ONE of these meetings. See Section 1.1 for information.

TABLE OF CONTENTS

SECTION I – PROPOSAL INFORMATION 6
1.0 PROPOSAL INFORMATION 6
1.1 RFP SCHEDULE OF EVENTS 6
1.2 SUBMISSION OF PROPOSAL 7
1.3 NUMBER OF COPIES 8
1.4 SPECIAL TERMS 8
1.5 RFP OBJECTIVE 8
1.6 CONFIDENTIAL OR PROPRIETARY INFORMATION 9
1.7 AMENDMENTS 9
1.8 WITHDRAWAL OR MODIFICATION OF OFFERS 9
1.9 ACCEPTANCE 9
1.10 PROPOSAL PREPARATION COST 10
1.11 AWARD 10
1.12 PERFORMANCE PERIOD 10
1.13 DEBRIEFING 11
1.14 SUBSTANTIVE PROPOSALS 11
1.15 OFFEROR'S QUALIFICATIONS 11
1.16 NON-COLORADO ENTITIES 11
1.17 PROCUREMENT RULES AND REGULATIONS 12
1.18 FAIR TREATMENT OF OFFERORS 12
1.19 ORDER OF PRECEDENCE 12
1.20 SALES TAX 13
1.21 BOND REQUIREMENTS 13
1.22 INTERPRETATION OF QUANTITIES IN PROPOSAL FORM 14
1.23 INTERPRETATION OF PLANS AND SPECIFICATIONS 14
1.24 EXAMINATION OF PLANS, SPECIFICATIONS, SPECIAL PROVISIONS, AND SITE OF WORK. 14
1.25 COMBINATION OR CONDITIONAL PROPOSALS 15
1.26 ANTI-COLLUSION AFFIDAVIT 15
1.27 MATERIAL GUARANTY 16
SECTION II – PROPOSAL CONTENT 17
2.0 PROPOSAL CONTENT 17

2.1 PROPOSAL FORMAT 17
2.2 COVER LETTER 17
2.3 PROPOSAL CERTIFICATION 17
2.4 ORGANIZATIONAL BACKGROUND AND OVERVIEW 18
2.5 PROJECT APPROACH 18
2.6 KEY PERSONNEL 19
2.7 RELEVANT EXPERIENCE 20
2.8 PRICE AREA 20
2.9 PROPOSAL PRESENTATION 21
2.10 EXCEPTIONS 21
2.11 INSURANCE REQUIREMENTS 21
SECTION III – EVALUATION FACTORS 22
3.0 EVALUATION AND AWARD 22
3.1 EVALUATION CRITERIA 22
3.1.1 PROJECT APPROACH 22
3.1.2 KEY PERSONNEL 22
3.1.3 RELEVANT EXPERIENCE 22
3.1.4 PRICE AREA 22
3.1.5 PROPOSAL PRESENTATION 22
3.1.6 EXCEPTIONS AND INSURANCE 22
3.2 RANKING 22
3.3 SELECTION COMMITTEE 25
3.4 AWARD OF CONTRACT 25
SECTION IV – SPECIAL CONTRACT TERMS AND CONDITIONS 26
4.0 SPECIAL CONTRACT TERMS AND CONDITIONS/SPECIAL SOLICITATION PROVISIONS 26
SECTION V – EXHIBITS 27
EXHIBIT 1 – PROPOSAL CERTIFICATION 28
EXHIBIT 2 – SAMPLE CONTRACT 38
EXHIBIT 3 – EXCEPTIONS 60
EXHIBIT 4 – MINIMUM INSURANCE REQUIREMENTS 61
EXHIBIT 5 – RESERVED 62
EXHIBIT 6 – QUALIFICATION STATEMENT 63
EXHIBIT 7 – EVALUATION SCORESHEET 66

EXHIBIT 8 – STORMWATER CONSTRUCTION MANUAL 73
EXHIBIT 9 – CONTRACTOR SAFETY PROGRAM 74
SECTION VI – SCHEDULES 75
SCHEDULE A – PROPOSAL PRICE SHEET
SCHEDULE B – GENERAL CONSTRUCTION TERMS AND CONDITIONS
SCHEDULE C – SPECIAL CONSTRUCTION TERMS AND CONDITIONS
SCHEDULE D – STANDARD SPECIFICATIONS
SCHEDULE E – MEASUREMENT AND PAYMENT
SCHEDULE F – SCOPE OF WORK
SCHEDULE G - EXHIBITS

SECTION I – PROPOSAL INFORMATION

1.0 PROPOSAL INFORMATION

Section I provides general information to potential Offerors, such as proposal submission instructions and other similar administrative elements. This RFP is available on Rocky Mountain E-Purchasing System: (www.bidnetdirect.com)

All addenda or amendments shall be issues through the Rocky Mountain E-Purchasing System and may not be available through any other source.

1.1 RFP SCHEDULE OF EVENTS

The upcoming schedule of events is as follows:

Event	**Date**
Issue Request for Proposal	September 29, 2020
Pre-Proposal Conference #1	October 7, 2020 10:30AM

We will hold a pre-proposal conference at 688 Geiger Ct, Colorado Springs, CO 80915. To submit a proposal you must attend one of the three scheduled meetings.

Pre-Proposal Conference #2	October 8, 2020 1:00PM

We will hold a pre-proposal conference at 688 Geiger Ct, Colorado Springs, CO 80915. To submit a proposal you must attend one of the three scheduled meetings.

Pre-Proposal Conference #3	October 9, 2020 1:00PM

We will hold a pre-proposal conference virtually using Microsoft Teams for anyone who is not able to attend in person. To submit a proposal you must attend one of the three scheduled meetings.

Join Microsoft Teams Meeting

Cut Off Date for Questions	October 14, 2020 1:00PM

Questions about the RFP must be emailed in writing and directed to Michael Zeller, at the following email address: michael.zeller@coloradosprings.gov.

A written response to any inquiry may be provided in the form of an Amendment to the solicitation. See 1.7 Amendments. Questions must be received no later than 1:00PM October 14, 2020.

DO NOT CONTACT ANY OTHER INDIVIDUAL AT THE CITY OF COLORADO SPRINGS REGARDING THIS SOLICITATION.

The only acceptable method of submitting questions is by email to the Contracting Specialist. Faxes or physical mail delivery are not acceptable.

Proposal Due Date	October 28, 2020 2:00PM
Interviews (if applicable)	TBD
Award of Contract	EST December 1, 2020
Notice to Proceed	January 1, 2021

1.2 SUBMISSION OF PROPOSAL

Proposals are to be submitted to:

Michael Zeller
Contracts Specialist
107 N. Nevada Avenue, Suite 125
Colorado Springs, CO 80903

*************************NO LATE OFFERS WILL BE ACCEPTED***********************

Date/Time: Proposals shall be received on or before 2:00PM October 28, 2020.

Identification of Proposal:

Proposals shall be submitted in an envelope(s) or container(s) with the solicitation number, date for submission of offer and the Offeror's name clearly marked on the outside of the envelope(s) or container(s).

RFP No. and Title: R20-143M 2C Extension Pre-Overlay Concrete
Due Date: October 28, 2020 2:00PM
Company:

Any offer that is submitted without being properly marked may be opened for identification prior to the deadline for receipt of proposals and then resealed.

1.3 NUMBER OF COPIES

Offerors shall submit six (6) hardcopies of the proposal documents. Offerors shall also submit one softcopy on thumb drive/CD. Upon submission, all proposal documents shall become and remain the property of the City of Colorado Springs.

1.4 SPECIAL TERMS

Please note the following definitions of terms as used herein:

The term “City” means the City of Colorado Springs.

The term “Contractor” or “Consultant” means the Offeror whose offer is accepted and is awarded the contract to provide the products or services specified in the RFP.

The term “Offer” means the proposal.

The term “Offeror” means the person, firm, or corporation that submits a formal proposal or offer and that may or may not be successful in being awarded the contract.

The term “Project” refers to 2C Extension Pre-Overlay Concrete.

The term “Request for Proposal” or “RFP” means this solicitation of a formal, negotiable proposal/offer. Any offer that is accepted will be the offer that is deemed by the City of Colorado Springs to be most advantageous in terms of the criteria designated in the RFP.

1.5 RFP OBJECTIVE

The objective of this RFP is to provide sufficient information to enable qualified Offerors to submit written proposals to the City of Colorado Springs. The RFP is not a contractual offer or commitment to purchase products or services. The Offeror may present options and variables to the scope while still meeting the minimum requirements of this solicitation. Innovative proposals/solutions are encouraged and considered in the selection and/or award.

All information included in proposals must be legible. Any and all corrections and or erasures must be initialed by Offeror. Each proposal shall be accompanied by a cover letter signed by an authorized representative of the Offeror. The contents of the proposal submitted by the successful Offeror may become part of any contract awarded as a result of this solicitation.

1.6 CONFIDENTIAL OR PROPRIETARY INFORMATION

If an Offeror believes that parts of an offer are confidential, then the Offeror must so specify. The Offeror must include in bold letters the term "CONFIDENTIAL" on that part of the offer which the Offeror believes to be confidential. The Offeror must submit in writing specific detailed reasons, including any relevant legal authority, stating why the Offeror believes the material to be confidential. Vague and general claims as to confidentiality will not be accepted. The City of Colorado Springs will be the sole judge as to whether a claim is acceptable. Decisions regarding the confidentiality of information will be made when requests are made to make the information public. All offers and parts of offers, which are not marked as confidential, will automatically be considered public information after the contract is awarded. The successful offer may be considered public information even though parts are marked confidential.

1.7 AMENDMENTS

Amendments to this RFP may be issued at any time prior to the time set for receipt of proposals. Offerors are required to acknowledge receipt of any amendments issued to this RFP by returning a signed copy of each amendment issued. Signed copies of each amendment must be received on or before the time set for receipt of offers.

The City of Colorado Springs will post all amendments on the Rocky Mountain E-Purchasing System (www.rockymountainbidsystem.com). It is the Offeror's responsibility to check the website for posted amendments or contact the Contracts Specialist listed to confirm the number of amendments which have been issued.

1.8 WITHDRAWAL OR MODIFICATION OF OFFERS

Any Offeror may modify or withdraw an offer in writing at any time prior to the deadline for submission of an offer.

1.9 ACCEPTANCE

Any offer received and not withdrawn shall be considered an offer, which may be accepted by the City of Colorado Springs based on initial submission without discussions or negotiations.

By submitting an offer in response to this solicitation, the Offeror agrees that any offer it submits may be accepted by the City of Colorado Springs at any time within 90 calendar days from the date of submission deadline.

The City of Colorado Springs reserves the right (a) to reject any or all offers,(b) to waive informalities and minor irregularities in offers received, and/or (c) to accept any portion of an offer if deemed in the best interest of the City of Colorado Springs. Failure of the Offeror to provide in its offer any information requested in the RFP may result in rejection of the offer for non-responsiveness.

1.10 PROPOSAL PREPARATION COST

The cost of proposal preparation is not a reimbursable cost. Proposal preparation shall be at the Offeror's sole expense and is the Offeror's total and sole responsibility.

1.11 AWARD

The City of Colorado Springs intends to make an award using the evaluation criteria listed in this RFP to determine the best value, considering all factors and criteria in the proposals submitted. Best value means the expected outcome of an acquisition that, in the City's estimation, provides the greatest overall benefit in response to the requirements detailed in the RFP. The City of Colorado Springs reserves the right to reject any or all offers and to not make an award.

1.12 PERFORMANCE PERIOD

The performance period of any contract awarded as a result of this RFP is anticipated to be as follows.

Base Year:	January 1, 2021 – December 31, 2021
Option Year 1:	January 1, 2022 – December 31, 2022
Option Year 2:	January 1, 2023 – December 31, 2023
Option Year 3:	January 1, 2024 – December 31, 2024
Option Year 4:	January 1, 2025 – December 31, 2025

Maximum Option Year unit price increase will be capped at a not-to-exceed limit of three (3) percent (annually) or the Colorado Department of Transportation (CDOT) Cost Index (annual change) whichever is lower. If requested unit price quotes for any option year period exceed this limitation, the City reserves the right to re-solicit proposals or bids.

CDOT Cost Index Report can be found at the following website:
https://www.codot.gov/business/eema/construction-cost-index

1.13 DEBRIEFING

Offerors not selected may request a debriefing on the selection process as well as discussion of the strengths and weaknesses of their proposal upon receipt of notification that their offer was not selected.

A debriefing may be scheduled by contacting the Contracts Specialist listed above. The Contracts Specialist must receive a written request for debriefing no later than ten (10) calendar days after issuance of a notification that the Offeror's offer was not selected.

1.14 SUBSTANTIVE PROPOSALS

By responding to this RFP, the Offeror certifies (a) that Offeror's proposal is genuine and is not made in the interest of, or on behalf of, an undisclosed person, firm, or corporation; (b) that Offeror has not directly or indirectly induced or solicited any other offerors to put in a false or sham proposal; (c) that Offeror has not solicited or induced any other person, firm, or corporation to refrain or abstain from proposing an offer or proposal; (d) that Offeror has not sought by collusion to obtain for themselves any advantage over any other offerors or over the City of Colorado Springs; and (e) that Offeror has not violated or caused any person to violate, and shall not violate or cause any person to violate, the City's Code of Ethics contained in Article 3, of Chapter 1 of the City Code and in the City's Procurement Rules and Regulations.

1.15 OFFEROR'S QUALIFICATIONS

Each Offeror must complete Exhibit 6 – Qualification Statement.

No contract will be awarded to any Offeror who is in arrears to the City, upon any debt or contract, or who is in default, in any capacity, upon any obligation to the City or is deemed to be irresponsible or unreliable by the City based on past performance.

1.16 NON-COLORADO ENTITIES

If Offeror is a foreign entity, Offeror shall comply with C.R.S. section 7-90-801, "Authority to transact business or conduct activities required," and section 7-90-802, "Consequences of transacting business or conducting activities without authority."

Before or at the time that the contract is awarded to an entity organized or operating outside the State of Colorado, such entity shall obtain authorization to do business in the State of Colorado, designate a place of business herein, and appoint an agent for service of process.

Such entity must furnish the City of Colorado Springs with a certificate from the Secretary of the State of Colorado to the effect that a certificate of authority to do business in the State of Colorado has been issued by that office and is still valid. The entity shall also provide the City with a certified copy of the designation of place of business and appointment of agent for service of process from the Colorado Secretary of State, or a letter from the Colorado Secretary of State that such designation of place of business and agent for service of process has been made.

1.17 PROCUREMENT RULES AND REGULATIONS

All projects advertised by the City of Colorado Springs are solicited in accordance with the City's Procurement Rules and Regulations. The City's Procurement Rules and Regulations can be reviewed and/or downloaded from the City website www.coloradosprings.gov. The Contracts Specialist may also provide a softcopy of the Rules and Regulations upon request. Any discrepancies regarding conflicting statements, decisions, irregularities, clauses, or specifications will be rectified utilizing the City's Procurement Rules and Regulations, when applicable. It is the Offeror's responsibility to advise the Contracts Specialist listed in this RFP of any perceived discrepancies prior to the date and time the offer is due.

1.18 FAIR TREATMENT OF OFFERORS

The City Procurement Services Division shall be responsible for ensuring the procurement of products, commodities, and services are in a manner that affords all responsible businesses a fair and equal opportunity to compete. If an Offeror believes that a procurement is not conducted in a fair and equitable manner, the Offeror is encouraged to inform the City Procurement Services Manager as soon as possible.

1.19 ORDER OF PRECEDENCE

Any inconsistency in this solicitation shall be resolved by giving precedence in the following order:

(a) Sections I-IV of this Solicitation
(b) Special Construction Terms and Conditions
(c) General Construction Terms and Conditions
(d) Measurement and Payment
(e) Exhibits
(f) Standard Specifications

1.20 SALES TAX

The successful Offeror, if awarded a contract, shall apply to the Colorado Department of Revenue for a tax-exempt certificate for this project. The certificate does not apply to City of Colorado Springs Sales and Use Tax which shall be applicable and should be included in all proposals. The tax-exempt project number and the exemption certificate only apply to County, PPRTA (Pikes Peak Rural Transportation Authority), and State taxes when purchasing construction and building materials to be incorporated into this project.

Furthermore, the exemption does not include or apply to the purchase or rental of equipment, supplies or materials that do not become a part of the completed project or structure. In these instances, the purchase or rental is subject to full taxation at the current taxation rate.

The Offeror and all subcontractors shall include in their Offer City of Colorado Springs Sales and Use Tax on the work covered by the offer, and all other applicable taxes.

Forms and instructions can be downloaded at https://coloradosprings.gov/sales-tax/page/additional-sales-tax-forms?mlid=30771 Questions can be directed to the City Sales Tax Division at (719) 385-5903.

Our Registration Numbers are as follows:
City of Colorado Springs
Federal I.D.: 84-6000573
Federal Excise: A-138557
State Sales Tax: 98-03479

1.21 BOND REQUIREMENTS

The Offeror is advised that the successful Offeror shall be required to furnish to the City of Colorado Springs, upon award, one copy of each: Performance Bond, Labor and Materials Payment Bond, and a Maintenance Bond in the amount of 100% of the total contract within ten (10) calendar days after notification of award of a contract. The cost of all bonds shall be included in Offeror's offer.

Bonds shall:

a) Be for the full amount of the contract price.

b) Guarantee the Contractor's faithful performance of the work under the contract, and the prompt and full payment for all labor and materials involved therein.

c) Guarantee protection to the City of Colorado Springs against liens of any kind.

d) Be, when a surety bond is furnished, from a surety company operating lawfully in the State of Colorado and be accompanied with an acceptable "Power of Attorney" form attached to each bond copy.

e) Be issued from a surety company that is acceptable to the City of Colorado Springs.

f) Be submitted using the forms in the Exhibit section of this solicitation.

1.22 INTERPRETATION OF QUANTITIES IN PROPOSAL FORM

Except as otherwise provided in this RFP, the quantities appearing in the proposal form are estimates prepared for the comparison of proposals.

After award, payment to the Contractor will be made in accordance with the following procedures:

(a) Measurement required. When the Contract requires measurement of work performed or material furnished, payment will be made for actual quantities measured and accepted.

(b) Measurement Not Required. When the Contract does not require quantities of work performed or materials furnished to be measured, payment will be made for the quantities appearing in the Contract.

The estimated quantities of work to be performed and materials to be furnished may be increased, decreased or omitted.

1.23 INTERPRETATION OF PLANS AND SPECIFICATIONS

Any change to proposal forms, plans, or specifications prior to the opening of proposals will be issued by the City in the form of an Amendment. Certain individuals may be named in the RFP that have authority to provide information, clarification or interpretation to Offerors prior to opening of proposals. Information obtained from persons other than those named individuals is invalid and shall not be used for proposal purposes.

1.24 EXAMINATION OF PLANS, SPECIFICATIONS, SPECIAL PROVISIONS, AND SITE OF WORK.

The Offeror is expected to examine the site of the proposed work, the proposal, plans, specifications, supplemental specifications, special provisions, and Contract

forms, before submitting a proposal. The submission of a proposal will be considered conclusive evidence that the Offeror has made this examination and is aware of the conditions to be encountered in performing the work according to the Contract.

Boring logs and other records of subsurface investigations, if they exist, are available for inspection by Offerors. These logs and records are made available so that all Offerors have access to identical subsurface information that is available to the City and is not intended as a substitute for personal investigation, interpretation, and judgment of the Offerors.

The City does not warrant the adequacy of boring logs and other records of subsurface investigations, and such information is not considered to be a part of the Contract. When a log of test borings is included in the subsurface investigation record, the data shown in the individual log of each test boring apply only to that particular boring and are not intended to be conclusive as to the character of any material between or around test borings. If Offerors use this information in preparing a proposal, it is used at their own risk, and Offerors are responsible for all conclusions, deductions, and inferences drawn from such information.

Offerors may conduct subsurface investigations at the project site at Offeror's expense; the City will afford them this opportunity prior to public opening of proposals.

If an Offeror discovers an apparent error or omission in the proposal form, estimated quantities, plan, or specifications, the Offeror shall immediately notify the Contracting Specialist to enable the City to make any necessary revisions. The City may consider it to be detrimental to the City for an Offeror to submit an obviously unbalanced unit proposal price.

1.25 COMBINATION OR CONDITIONAL PROPOSALS

If an RFP is issued for projects in combination and separately, the Offeror may submit proposals either on the combination or on separate units of the combination. The City reserves the right to make awards on combination or separate proposals to the advantage of the City. Combination proposals will be considered, only when specified.

1.26 ANTI-COLLUSION AFFIDAVIT

The Offeror by signing their proposal submitted to the City is certifying that the Offeror has not participated in any collusion or taken any action in restraint of free competitive bidding. This statement may also be in the form of an affidavit provided by the City and signed by the Offeror. The original of the signed anti-collusion affidavit, if separately required and provided with the RFP, shall be submitted with

the proposal. The proposal will be rejected if it does not contain the completed anti-collusion affidavit.

1.27 MATERIAL GUARANTY

The successful Offeror may be required to furnish a complete statement of the origin, composition, and manufacture of materials used in the construction of the work together with samples, which will be tested for conformance with Contract requirements.

SECTION II – PROPOSAL CONTENT

2.0 PROPOSAL CONTENT

Section II provides instructions regarding the format and content required for proposals submitted in response to this solicitation.

2.1 PROPOSAL FORMAT

Offeror's written proposal should include concise, but complete, information, emphasizing why the Offeror is best or best qualified to provide the required services. The Offeror's written proposal should include the information in the format outlined below and must be limited to no more than twenty-five (25) pages. **A page shall be defined as 8-1/2" x 11"; single sided, with one-inch margins, and a minimum font of Times New Roman 10 or equal**. Each section of the proposal should be labeled to clearly follow the requirements sections identified in this section of the RFP. The following listed Exhibits must be filled out and returned with the proposal and are not counted against the page limit:

Exhibit 1 Reps and Certs
Exhibit 3 Exceptions
Exhibit 4 Insurance Requirements
Exhibit 6 Qualifications Statement
Schedule A – Price Sheet

2.2 COVER LETTER

The cover letter shall be no more than three pages. The cover letter shall contain at least the following information.

A. RFP Number and Project Name.
B. Statement that the Offeror is qualified to perform the work.
C. Certification Statement that the information and data submitted are true and complete to the best knowledge of the individual signing the letter.
D. Name, telephone number, email address, and physical address of the individual to contact regarding the proposal.
E. The signature of an authorized principal, partner, or officer of the Offeror.

2.3 PROPOSAL CERTIFICATION

The Offeror must fill out and submit Exhibit 1 with its Proposal.

2.4 ORGANIZATIONAL BACKGROUND AND OVERVIEW

The Offeror must provide a brief history and overview of its company and its organizational structure, with special emphasis on how this project will fit within that structure. Also include principal place of business location(s), office locations, size of firm, and assessment of financial stability (annual public reports or private financial statements shall be included in an appendix or under separate cover; private financial information will be kept confidential by the City).

2.5 PROJECT APPROACH

The Offeror should address each work area in sufficient detail to demonstrate a clear and full understanding of the work, clearly present proposed solutions, and indicate that it has performed adequate planning to accomplish tasks as defined in the Statement of Work. Innovations, efficiencies, and detailed specifics are all encouraged. The Offeror should also provide a plan of operation, to include management of personnel, workload, schedule, and budget. An organization chart should be provided which demonstrates clear and effective lines of authority, responsibility, and communication for management, supervisory, and construction personnel. Further, the Offeror should provide evidence of sufficient planning to ensure the work is completed on schedule and within budget.

The Offeror must at least address the following areas:

1. *Resources*. Discuss your approach to execution of the work.
    a. How many full-time construction crews are available to be committed to the project? Are these crews subcontracted?
    b. Describe your proposed construction crew structure including number of personnel, skill areas, and equipment.
2. *Traffic Control*. Discuss your approach to planning, layout, and maintenance of traffic control including pedestrian travel ways during construction. Are traffic control personnel subcontracted? Are they solely dedicated to traffic control duties for the project? Who handles traffic control permitting and scheduling?
3. *Construction Phasing*. Discuss your approach to handling multiple work phases on the same roadway or adjacent roadways. Describe your typical planned work sequence from mobilization through punchlist closeout of each work site.
4. *Erosion and sediment control*. Discuss your approach to planning, implementation, and maintenance of stormwater management during all phases of work. Are erosion control personnel responsible for other work areas? Are personnel certified and trained in storm water management best management practices?
5. *Coordination.* Discuss your approach to coordinating with utilities, stakeholders, neighborhood organizations (HOAs), businesses, schools, Special Improvement Metro Districts (SIMD), and other City Divisions (Parks & Rec, Traffic,

Stormwater, etc.). Discuss your understanding of impacts to be encountered for this project and how you will coordinate and phase your construction to both facilitate and accommodate these project stakeholders.

6. *Schedule*. Discuss your approach to schedule management including baselining, updating, and reporting progress of the work.
7. *Quality Control*. Discuss your quality control plan, processes and approach to ensure that the City receives a quality product that meets all specifications. Specifically discuss approach to laying out and constructing pedestrian curb ramps that meet City specifications.
8. *Safety*. Discuss the contractor's approach and commitment to safety for both construction workers and the public traveling through the construction site.

Consider the following questions.

1. Does the proposal include a complete plan to accomplish each requirement, including subcontracting (if applicable) and suppliers?
2. Does the proposal demonstrate that appropriate and qualified personnel and equipment will be provided to carry out the requirement?
3. Is the proper level of effort directed toward each requirement? Does the level of effort look unrealistically low or unreasonably high?
4. Does the proposal demonstrate a firm understanding of the requirements and goals of the Statement of Work, as well as industry standards and reasonable expectations for a company in the industry?
5. Does the proposal fully and completely address each requirement and goal of the Statement of Work?
6. Does the proposal provide solutions to indicate that requirements and goals will be met on schedule and realistically?
7. Does it generally appear that the Offeror knows and thoroughly understands the business and requirement?

2.6 KEY PERSONNEL

The Offeror should identify key personnel proposed and their specific roles and responsibilities on the project. Resumes must be provided for key personnel to include at a minimum Contract Manager, Project Managers, Superintendents, Traffic Control Supervisors, Specialty Foreman. Contractor may have differing titles from those listed but should be similar in responsibility. Resumes do not count toward the page limit.

It is highly recommended that the Offeror provide sufficient content and detail to answer completely the following questions.

1. Provide up to three (3) citations of past experience for each Key Personnel that demonstrates their experience on City or similar projects. Include dates of each project, client/organization, responsibilities, and tasks per project.
2. Demonstrate Key Personnel familiarity with relevant City and state regulations and procedures in their areas of responsibility
3. Demonstrate key construction supervision personnel familiarity with layout and construction of pedestrian curb ramps to ADA/PROWAG specification.

Consider the following questions.

1. Does the Offeror provide complete resumes, including education, experience, background information, certifications, accomplishments, and other pertinent information?
2. Does the Offeror provide resumes for all key personnel?
3. Do the resumes demonstrate adequate professional, technical, and management levels to accomplish the work effectively and efficiently?

2.7 RELEVANT EXPERIENCE

The Offeror should provide at least three references or identify contracts demonstrating that it successfully provided services/products that are the same or similar to those required in the RFP. Explain how the key personnel were related to the projects cited as relevant experience.

It is highly recommended that the Offeror provide sufficient content and detail to answer completely the following questions:

1. Does the proposal include at least three references or past performance citations?
2. Are the references or past performance citations relevant to the requirements of the Statement of Work of the RFP?
3. Do these projects include construction of ADA/PROWAG accessible curb ramps?
4. Does the Offeror explain how they were successful on the projects provided as past performance?
5. Does the Offeror apply the past performance to the City requirement in such a way as to demonstrate added value due to experience?

2.8 PRICE AREA

In the Price Area, the Offeror should provide a detailed breakdown of the price for each year of performance. The price must be all-inclusive and include all unit costs for material, labor, other direct costs (e.g. travel), indirect costs (i.e. overhead and general and administrative costs), and profit/fee. Offers must include sufficient

detail to allow insight into the fairness and reasonableness of the price. If the contract type will be Time and Material (T&M) labor categories, labor rates, separated profit, and estimated material costs must be included in detail.

In addition, although price may not be the most important factor, it is still very important to the City of Colorado Springs. The Offeror's pricing must be competitive as compared to the budget amount, market pricing in the industry, and the pricing of other Offerors.

It is highly recommended that the Offeror provide sufficient content and detail to answer completely the following questions.

1. How does the price compare to the industry competition?
2. If low, is it unrealistically low?
3. If high, is there demonstrated added value for the additional cost?
4. Can you see how the price was built? If so, do the costs look appropriate for the task?
5. Does the Offeror leave applicable costs out of the calculations? For instance, some will say travel is not included and will be an extra cost. This should be considered when comparing to other Offerors.
6. Are there additional costs not addressed that the City would incur if the Offeror were awarded the contract? If so, include those costs when comparing to the budget amount and the competition.

2.9 PROPOSAL PRESENTATION

Presentation is an important factor. Offerors should provide a highly professional product, which is complete, accurate, easily understood, and effectively presented.

2.10 EXCEPTIONS

All Offerors must complete Exhibit 3, Exceptions Form and return it with their proposal. Some terms and conditions are not negotiable. Exceptions may be grounds for rendering the proposal unacceptable without further discussions.

2.11 INSURANCE REQUIREMENTS

All Offerors must complete Exhibit 4, Minimum Insurance Requirements and return with their proposal. Lack of responsiveness in this area may be grounds for rendering the proposal unacceptable without further discussions.

SECTION III – EVALUATION FACTORS

3.0 EVALUATION AND AWARD

Section III provides information regarding evaluation criteria and scoring. It also includes information regarding proposal selection and award of the resultant contract.

3.1 EVALUATION CRITERIA

3.1.1 PROJECT APPROACH
See Section II - Item 2.5

3.1.2 KEY PERSONNEL
See Section II - Item 2.6

3.1.3 RELEVANT EXPERIENCE
See Section II - Item 2.7

3.1.4 PRICE AREA
See Section II - Item 2.8

3.1.5 PROPOSAL PRESENTATION
See Section II – Item 2.9

3.1.6 EXCEPTIONS AND INSURANCE
See Section II – Items 2.10 and 2.11

3.2 RANKING

The order of ranking or importance in the evaluation shall be as follows:

First: Price Area
Second: Project Approach
Third: Key Personnel
Fourth: Relevant Experience
Fifth: Proposal Presentation

Possible scores for each criterion shall be as follows:

5 – Exceptional
4 – Very Good
3 – Satisfactory
2 – Marginal

1 – Unacceptable

Definitions for scoring are as follows:

The following apply to Sections 2.5-2.7:

Exceptional – The proposal meets all and exceeds many of the requirements of the RFP to the benefit of the City, and the information provided is of such a nature as to answer all questions without need for further inquiry. There are no corrective actions required, and no compromise of requirements is needed.

Very Good -- The proposal meets all and exceeds some of the requirements of the RFP to the benefit of the City, and the information provided is of such a nature as to answer most questions without need for further inquiry. There are no corrective actions required, and no compromise of requirements is needed.

Satisfactory -- The proposal meets the requirements of the RFP, and the information provided is of such a nature as to answer many questions without need for further inquiry. There are very few corrective actions required, and no substantive compromise of requirements is needed.

Marginal -- The proposal does not meet some of the requirements of the RFP, and the information provided is of such a nature as to require some clarification. There are some corrective actions required, and some non-substantive compromise of requirements is needed.

Unacceptable -- The proposal does not meet many of the requirements of the RFP, and the information provided is of such a nature as to require much clarification. There are many corrective actions required, and substantive compromise of requirements is needed.

The following apply to Section 2.8:

Exceptional – The proposal meets all and exceeds many of the requirements of the RFP to the benefit of the City, and the information provided is of such a nature as to answer all questions without need for further inquiry. There are no corrective actions required, and no compromise of requirements is needed. The price is lower than the budget amount and/or the average price of the competition.

Very Good -- The proposal meets all and exceeds some of the requirements of the RFP to the benefit of the City, and the information provided is of such a nature as to answer most questions without need for further inquiry. There are no corrective actions required, and no compromise of requirements is needed. The price is lower than the budget amount and/or the average price of the competition.

Satisfactory -- The proposal meets the requirements of the RFP, and the information provided is of such a nature as to answer many questions without need for further inquiry. There are very few corrective actions required, and no substantive compromise of requirements is needed. The price is very close to the budget amount and/or the average price of the competition.

Marginal -- The proposal does not meet some of the requirements of the RFP, and the information provided is of such a nature as to require some clarification. There are some corrective actions required, and some non-substantive compromise of requirements is needed. The price exceeds the budget amount and/or the average price of the competition.

Unacceptable -- The proposal does not meet many of the requirements of the RFP, and the information provided is of such a nature as to require much clarification. There are many corrective actions required, and substantive compromise of requirements is needed. The price significantly exceeds the budget amount and/or the average price of the competition.

<u>The following apply to Section 2.9:</u>

Exceptional – The proposal is professionally communicated, complete in all areas, provides sufficient detail, and is presented in a clear and effective manner. The quality far exceeds that of the competition, industry standard, or reasonable expectation.

Very Good -- The proposal is professionally communicated, complete in all areas, provides sufficient detail, and is presented in a clear and effective manner. The quality exceeds that of the competition, industry standard, or reasonable expectation.

Satisfactory -- The proposal is professionally communicated, complete in all areas, provides sufficient detail, and is presented in a clear and effective manner. The quality is equal to that of the competition, industry standard, or reasonable expectation.

Marginal -- The proposal is not professionally communicated and is incomplete in some areas, provides insufficient detail, and is not presented in a clear and effective manner. The quality is below that of the competition, industry standard, or reasonable expectation.

Unacceptable -- The proposal is not professionally communicated and is incomplete in many areas, provides insufficient detail, and is not presented in a clear and effective manner. The quality is far below that of the competition, industry standard, or reasonable expectation.

Final/Overall Scoring

The final proposal score will be determined by adding the area scoring. The sum of the area scores will be the final/overall score.

3.3 SELECTION COMMITTEE

A selection committee will review all proposals. Through this process, the City will determine which proposals are acceptable or unacceptable. The City will notify, in writing, the Offerors whose proposals are deemed to be unacceptable. Those Offerors offering proposals deemed to be acceptable by the City will be evaluated and scored by the selection committee. This scoring will determine which Offerors are considered to be in the competitive range and may be the basis for an award decision without further steps.

If the selection committee elects not to award based upon evaluation scoring, it may engage in a forced elimination process. To inform this process, it may require oral presentations or interviews with the Offerors considered to be in the competitive range. If oral presentations or interviews are conducted, they may also be scored, or they may simply be considered as information supporting the forced elimination process. The selection committee may request revisions to the proposal from each of the Offerors at the conclusion of the interviews. The intent of the forced elimination process is to reach consensus. The decision will be based on all relevant factors, and based upon perception of best value. The final decision may or may not exactly reflect scoring ranking.

The City also reserves the right to request best and final offers from all Offerors at any point in the proposal evaluation process.

3.4 AWARD OF CONTRACT

It is anticipated that there will be negotiations or discussions with Offerors. However, the City reserves the right to award without negotiations or discussions. The City also reserves the right to award a contract not necessarily or merely to the Offeror with the most advantageous price. The City intends to award to the Offeror that demonstrates the best value to the City and the most substantiated ability to fulfill the requirements contained in this Request for Proposal. A contract prepared by the City will be finalized and/or negotiated with the successful Offeror. In the event a contract cannot be negotiated with the top ranked Offeror, the City may enter into negotiations with the second highest ranked Offeror, or the City may decide to call for new proposals. Immediately after the notice of award, the successful Offeror will begin planning in conjunction with the City of Colorado Springs staff (to be designated by the City) to ensure fulfillment of all its obligations. The successful Offeror may be expected to attend regular meetings as required by the City to assist in the preparation for startup.

SECTION IV – SPECIAL CONTRACT TERMS AND CONDITIONS

4.0 SPECIAL CONTRACT TERMS AND CONDITIONS/SPECIAL SOLICITATION PROVISIONS

ADA Standards: It is a requirement of the City and required by law that any new or renovated facility meet the scoping and technical requirements of the 2010 ADA Standards for newly designed and constructed or altered local government facilities, public accommodations, and facilities. The selected Design Professional shall design the project so it both conforms to the 2010 ADA Standards, as applicable and as amended, and is readily accessible to and usable by individuals with disabilities. The selected Contractor shall build the project so it both conforms to the 2010 ADA Standards, as applicable and as amended, and is readily accessible to and usable by individuals with disabilities. Facilities that are designed, constructed, and/or altered facilities that meet or exceed the IBC 2015/ANSI A117.1 2009, used by Pikes Peak Regional Building Department, will be accepted as meeting or exceeding the 2010 ADA Standards.

SECTION V – EXHIBITS

EXHIBIT 1 – PROPOSAL CERTIFICATION 28

EXHIBIT 2 – SAMPLE CONTRACT 38

EXHIBIT 3 – EXCEPTIONS 60

EXHIBIT 4 – MINIMUM INSURANCE REQUIREMENTS 61

EXHIBIT 5 – RESERVED 62

EXHIBIT 6 – QUALIFICATION STATEMENT 63

EXHIBIT 7 – EVALUATION SCORESHEET 66

EXHIBIT 8 – STORMWATER CONSTRUCTION MANUAL 73

EXHIBIT 9 – CONTRACTOR SAFETY PROGRAM 74

EXHIBIT 1 – PROPOSAL CERTIFICATION

Check or Mark the space after each number to indicate compliance.

1. _____ Address of Offeror's Principal Place of Business:

_____

_____

_____

Does Offeror have an established office or facility in Colorado Springs?

Yes _____ No _____

If yes, indicate address below if different than Principal Place of Business.

Colorado Springs Facility - Year established _____

Address of Colorado Springs Facility:

_____

_____

_____

Percent of Work to be Performed from Principal Place of Business? _____

Percent of Work to be Performed from Colorado Springs Facility? _____

2. _____ Indicate your ability to provide a certificate of insurance evidencing the required coverage types and limits specified in Minimum Insurance Requirements Exhibit. (The certificate of insurance must reflect the City of Colorado Springs as an Additional Insured, as applicable.)

Indicate your ability to comply with the following requirements:

The City shall be added as an Additional Insured to all liability policies:

Yes _____ No _____

Your property and liability insurance company is licensed to do business in Colorado:

Yes _____ No _____
Provide the name of your property and liability insurance company here:

Name: _____

Your property and liability insurance company has an AM best rating of not less than B+ and/or VII:

Yes _____ No _____

Worker's Compensation Insurance is carried for all employees and covers work done in Colorado.

Yes _____ No _____

3. _____ Provide one (1) copy of current financial statements (if required). Enclose financial information in a separate envelope; do not bind with the other proposal copies. If review of the information is to be restricted to the City's financial officer, it must be marked accordingly.

4. _____ Provide the completed and signed proposal. (Proposals must be identified as specified in this RFP document). All required Exhibits are attached.

By signing below, the Offeror certifies that no person or firm other than the Offeror or as otherwise indicated has any interest whatsoever in this offer or any Contract that may be entered into as a result of this offer and that in all respects the offer is legal and firm, submitted in good faith without collusion or fraud.

Offeror has appointed _____ as the Offeror's representative and contact for all questions or clarifications in regard to this Offeror.

Telephone: (___) _____

Email: _____

The undersigned acknowledges and understands the terms, conditions, Specifications and all Requirements contained and/or referenced and are legally authorized by the Offeror to make the above statements or representations.

_____	_____
(Name of Company)	(Signature)
_____	_____
(Address)	Date

_____ _____
(City, State and Zip) (Telephone Number)

_____ _____
(Name typed/Printed) (Title)

_____
(E-Mail Address)

FEDERAL TAX ID #_____

This Company Is: Corporation___ Individual____ Partnership____ LLC____

Offeror hereby acknowledges receipt of the following amendments, if applicable Offeror agrees that it is bound by all Amendments identified herein.

AMENDMENT #1_____ DATED:_____

AMENDMENT #2_____ DATED:_____

AMENDMENT #3_____ DATED:_____

Please Note the attached Representations and Certifications must be initialed by Offeror in the spaces provided and returned with this certification.

REPRESENTATIONS AND CERTIFICATIONS
Exhibit 1 Continued

1. INSURANCE REQUIREMENTS

Offeror shall comply with all insurance requirements and will submit the Insurance Certificates prior to performance start date. If limits are different from the stated amounts, Offeror shall explain variance. Certain endorsements and "additionally insured" statements may require further clarification and specific statements on a project specific basis and should have been described in the Offeror's proposal.

_____
Initials for 1

2. ETHICS VIOLATIONS

a) The Offeror shall have in place and follow reasonable procedures designed to prevent and detect possible violations described in this clause in its own operations and direct business relationships.
b) Offeror certifies the Offeror has not violated or caused any person to violate, and shall not violate or cause any person to violate, the City's Code of Ethics contained in Article 3, of Chapter 1 of the City Code and in the City's Procurement Rules and Regulations
c) When the Offeror has reasonable grounds to believe that a violation described in this clause may have occurred, the Offeror shall promptly report the possible violation to the City Contracts Specialist in writing.
c) The Offeror must disclose with the signing of this proposal, the name of any officer, director, or agent who is also an employee of the City and any City employee who owns, directly or indirectly, an interest of ten percent (10%) or more in the Offeror's firm or any of its branches.
d) In addition, the Offeror must report any conflict or apparent conflict, current or discovered during the performance of the Contract, to the City Contracts Specialist.
e) The Offeror shall not engage in providing gifts, meals or other amenities to City employees. The right of the Offeror to proceed may be terminated by written notice issued by City Contracts Specialist if Offeror offered or gave a gratuity to an officer, official, or employee of the City and intended by the gratuity to obtain a contract or favorable treatment under a contract.
f) The Offeror shall cooperate fully with the City or any agency investigating a possible violation on behalf of the City. If any violation is determined, the Offeror will properly compensate the City.
g) The Offeror agrees to incorporate the substance of this clause (after substituting "Contractor" for "Offeror") in all subcontracts under this offer.

_____
Initials for 2

3. ILLEGAL ALIENS

If Offeror has any employees or subcontractors, Offeror shall comply with § 8-17.5-101, et seq., C.R.S. regarding Illegal Aliens – Public Contracts for Services, and this section of this Agreement. 8-17.5-102 includes, in part, that:

A. Offeror shall not:
   a. Knowingly employ or contract with an illegal alien to perform work under this Agreement; or
   b. Enter into a contract with a subcontractor that fails to certify to Offeror that the subcontractor shall not knowingly employ or contract with an illegal alien to perform work under this Agreement.

B. Offeror has verified or attempted to verify that Offeror does not employ any illegal aliens and, will participate in the E-Verify Program or State Department program in order to confirm eligibility of all employees who are newly hired to perform work under public contract for services.

C. Offeror will not use E-Verify Program or State Department program procedures to undertake pre-employment screening of job applicants while the public contract for services is being performed.

D. If Offeror obtains actual knowledge that a subcontractor performing work under this Agreement knowingly employs or contracts with an illegal alien, Provider shall:
   a. Notify the subcontractor and the City within three days that Offeror has actual knowledge that the subcontractor is employing or contracting with an illegal alien; and
   b. Terminate the subcontract with the subcontractor if within three days of receiving such notice, the subcontractor does not stop employing or contracting with the illegal alien. However, the Offeror shall not terminate the contract with the subcontractor if during this three day period:
      i. The subcontractor provides information which establishes that the subcontractor has not knowingly employed or contracted with an illegal alien, and
      ii. The Offeror will not employ the illegal aliens in the performance of any City contract.

E. Offeror shall comply with any reasonable request by the Department of Labor and Employment made in the course of an investigation that the Department is undertaking pursuant to the authority established in §8-17.5-102(5), C.R.S.

F. If Offeror violates this provision, the City may terminate the contract for a breach of contract. If the Agreement is terminated, the Offeror shall be liable for actual and consequential damages.

_____
Initials for 3

4. COOPERATION WITH OTHER CONTRACTORS

Other City activities/contracts may be in progress or start during the performance of this contract. The Offeror shall coordinate the work harmoniously with the other contractors or City personnel, if applicable.

_____
Initials for 4

5. INTERNET USE

Should the Offeror require access to City Internet resources in the performance of this requirement, a “Contractor’s Internet Use Agreement” form must be separately signed by each individual having access to the City Network. The completed Contractor’s Internet Use Agreement will be maintained with this agreement. Inappropriate use of the City Network will be grounds for immediate termination of any awarded contact.

_____
Initials for 5

6. LITIGATION

If awarded a contract, Offeror shall notify the City within five (5) calendar days after being served with a summons, complaint, or other pleading in any matter which has been filed in any federal or state court or administrative agency. The Offeror shall deliver copies of such document(s) to the City's Procurement Services Manager. The term "litigation" includes an assignment for the benefit of creditors, and filings of bankruptcy, reorganization and/or foreclosure.

_____
Initials for 6

7. CONTRACTOR’S REGISTRATION INFORMATION

Offeror’s firm verifies and states that they are (check all that apply):

_____ Large Business (i.e. do not qualify as a small business or non-profit)

_____ Nonprofit

_____ Small Business

_____ Minority Owned Business/Small Disadvantaged Business

_____ Woman Owned Business

_____ Veteran Owned Business

_____ Service-Disabled Veteran Owned Business

_____ HUBZone Business

Note: The City accepts self-certification for these categories in accordance with Small Business Administration (SBA) standards. The SBA size standards are found on the SBA website https://www.sba.gov/content/am-i-small-business-concern.

_____
Initials for 7

8. CONTRACTOR PERSONNEL

a) The Offeror shall appoint one of its key personnel as the "Authorized Representative" who shall have the power and authority to interface with the City and represent the Offeror in all administrative matters concerning this proposal and any awarded contract, including without limitation such administrative matters as correction of problems modifications, and reduction of costs.
b) The Authorized Representative shall be the person identified in the Offeror's proposal, unless the Offeror provides written notice to the City naming another person to serve as its Authorized Representative. Communications received by the City Contracts Specialist from the Authorized Representative shall be deemed to have been received from the Offeror.

The individual, _____ (Name)
with position, _____ (Title)
Can be reached at
Work telephone number: _____
Home telephone number: _____
Cellular telephone number: _____
E-mail address: _____

_____
Initials for 8

9. OFFEROR'S CERTIFICATION

The undersigned hereby affirms that:

a) He/She is a duly authorized agent of the Offeror;
b) He/She has read and agrees to the City's standard terms and conditions attached.
c) The offer is presented in full compliance with the collusive prohibitions of the City of Colorado Springs. The Offeror certifies that no employee of its firm has discussed, or compared the offer with any other offeror or City employee and has not colluded with any other offeror or City employee.
d) The Offeror certifies that it has checked all of its figures, and understands that the City will not be responsible for any errors or omissions on the part of the Offeror in preparing its proposal.
e) By submitting an offer the Offeror certifies that it has complied and will comply with all requirements of local, state, and federal laws, and that no legal requirements have been or will be violated in making or accepting this solicitation.
I hereby certify that I am submitting the proposal based on my company's capabilities to provide quality products and/or services on time.

_____
Initials for 9

10. OFFEROR CERTIFICATION REGARDING DEBARMENT, SUSPENSION, PROPOSED DEBARMENT, AND OTHER RESPONSIBILITY MATTERS:

A. The Offeror certifies to the best of its knowledge and belief, that (i) the Offeror and/or any of its Principals
   a. Are ( ), Are not ( ) presently debarred, suspended, proposed for debarment, or declared ineligible for the award of contracts by any Federal agency;
   b. Have ( ), Have not ( ), within a three year period preceding this offer, been convicted of or had a civil judgment rendered against them for: commission of fraud or a criminal offense in connection with obtaining, attempting to obtain, or performing a public (federal, state, local) contract or subcontract; violation of Federal or state antitrust statutes relation to the submission of offers; or commission of embezzlement, theft, forgery, bribery, falsification or destruction of records, making false statement, tax evasion, or receiving stolen property; and
   c. Are ( ), Are not ( ) presently indicated for, or otherwise criminally or civilly charged by a governmental entity with, commission of any of the offenses enumerated in any paragraphs above.
B. The Offeror shall provide immediate written notice to the City Contracts Specialist if, at any time prior to contract award, the Offeror learns that its certification was erroneous when submitted or has become erroneous by reasons of changed circumstances.
C. The certification in paragraph 1. above, is a material representation of fact upon which reliance was placed when making award. If it is later determined that the Offeror knowingly rendered an erroneous certification, in addition to other remedies available to the City, the City Contracts Specialist may

terminate the contract resulting from this solicitation for default. Termination for default may result in additional charges being levied for the costs incurred by the City to initiate activities to replace the awarded Contractor.

_____
Initials for 10

11. ACCEPTANCE OF CITY CONTRACTS SPECIALIST'S SOLE AUTHORITY FOR CHANGES

Unless otherwise specified in the Contract, the Offeror hereby agrees that any changes to the scope of work, subsequent to the original contract signing, shall be generated in writing and an approval signature shall be obtained from the City Contracts Specialist prior to additional work performance.

_____
Initials for 11

12. CITY CONTRACTOR SAFETY PROGRAM

The Offeror hereby agrees to adhere to a worker safety program for contractor employees on a City job site or location. By initialing below, the Offeror has reviewed the information and will abide by the City Policy which is available for review:

https://coloradosprings.gov/finance/page/procurement-regulations-and-documents

_____
Initials for 12

13. ACCEPTANCE OF CITY ENVIRONMENTALLY PREFERRED PURCHASING (EPP) POLICY

The City of Colorado Springs is committed to buying more environmentally preferable goods and services, as long as they meet performance needs, are available within a reasonable time and at a reasonable cost. The Offeror hereby acknowledges review of this policy by initialing below.

https://coloradosprings.gov/finance/page/procurement-regulations-and-documents

_____
Initials for 13

14. FRAUD, WASTE, AND ABUSE

Everyone has a duty to report any suspected unlawful act impacting the City of Colorado Springs operations and its enterprises. Anyone who becomes aware of the existence or apparent existence of fraud, waste, and abuse in City of Colorado Springs is encouraged to report such matters to the City Auditor's Office in writing or on the telephone hotline 385-2387 (ADTR). Written correspondence can be mailed to:

City Auditor
P.O. Box 2241
Colorado Springs CO 80901

Or via email CityAuditManagement@springsgov.com. Any of these mechanisms allow for anonymous reporting. For more information, please go to the website https://coloradosprings.gov/cityfraud.

_____
Initials for 14

Name of Company:

Federal Tax ID Number:

DUNS Number:

Principle Place of Business:

_____
Signature of Authorized Representative

Printed Name:

Title:

Date:

EXHIBIT 2 – SAMPLE CONTRACT

CONSTRUCTION CONTRACT

Contract Number:		Project Name/Title	
Vendor/Contractor			
Contact Name:		Telephone:	
Email Address:			
Address:			
Federal Tax ID #		Please check one:	☐ Corporation ☐ Individual ☐ Partnership
City Contracting Specialist	Name & Phone#	City Dept Rep	Name & Phone# & Department Name
NOT TO EXCEED Contract Amount:		City Account #	Acct Code (5) Fund (3) Dept (4) Project (7)
Contract Type:		Period of Performance:	

1. INTRODUCTION

THIS *TYPE* CONTRACT ("Contract") is made and entered into this ___ day of _____, 20xx by and between the City of Colorado Springs, a Colorado municipal corporation and home rule city, in the County of El Paso, State of Colorado, (the "City"), and _____ (the "Contractor").

THE CITY AND THE CONTRACTOR HEREBY AGREE AS FOLLOWS:

The City has heretofore prepared the necessary Contract Documents for the following Activity: XXXXXXXX.

The Contractor did on the ____ day of _____, 20xx submit to the City the Contractor's written offer and proposal to do the work therein described under the terms and conditions therein set forth and furnish all materials, supplies, labor, services, transportation, tools, equipment, and parts for said work in strict conformity with the accompanying Contract Documents, which are attached hereto and incorporated herein by this reference, including the following:

1. This Contract
2. Appendix A – Additional Terms and Conditions
3. Appendix B – Contractor's Proposal,
4. Appendix C – Statement of Work.
5. Schedule A – Proposal Price Sheet
6. Schedule B – General Construction Terms and Conditions

7. Schedule C – Special Construction Terms and Conditions
8. Schedule D – Standard Specifications
9. Schedule E – Measurement and Payment
10. Exhibit 1 – Performance Bond
11. Exhibit 2 – Labor and Material Payment Bond
12. Exhibit 3 – Maintenance Bond
13. Exhibit 4 – Notification of Utilities
14. Exhibit 5 – Project Schedule

2. COMPENSATION/CONSIDERATION

If FFP:

THIS FIRM FIXED PRICE CONTRACT is established at firm fixed amount of $xxxxxxxx.

Subject to the terms and conditions of the Contract Documents, Contractor shall provide all materials, supplies, labor, services, transportation, tools, equipment, and parts to perform _____ services for the City of Colorado Springs in a good and workmanlike manner to the satisfaction of the City for the total contract amount designated above and in the Notice of Award, to be paid by the City to the Contractor.

If T&M

Subject to the terms and conditions of the Contract Documents, Contractor shall provide all materials, supplies, labor, services, transportation, tools, equipment, and parts to perform _____ services for the City of Colorado Springs in a good and workmanlike manner to the satisfaction of the City for the estimated price of _____ , not to exceed $_____ ("Not to Exceed estimate"). If the performance of this Contract involves the services of others or the furnishing of equipment, supplies, or materials, the Contractor agrees to pay for the same in full. At the time of payment by the City, the Contractor shall certify in writing that said payments have been so made.

This is a Time and Material (T&M) type contract. The Not to Exceed estimate is in accordance with the Contractor's T&M proposal and rates, as included in the attached proposal, dated XXXXXX. All labor charges shall be in accordance with the T&M rates provided therein. Invoiced hours shall be subject to City review and approval before payable.

The parties estimate that performance of this Contract will not exceed the Not to Exceed estimate. The Contractor shall notify the City Contracts Specialist in writing whenever it has reason to believe that the costs the Contractor expects to incur under this Contract in the following 60 days, when added to all costs previously incurred, will exceed 75 percent of the estimated cost specified herein; or the total cost for the

performance of this Contract will be either greater or substantially less than had been previously estimated. As part of the notification, the Contractor shall provide the Contracts Specialist a revised estimate of the total cost of performing this Contract.

The City is not liable for any costs above the Not to Exceed estimate, and the Contractor is not obligated to continue performance under this Contract (including actions under the Termination clause of this Contract) or otherwise incur costs in excess of the Not to Exceed estimate specified herein, until the City Contracts Specialist

(i) notifies the Contractor in writing that the estimated cost has been increased and

(ii) provides a revised estimated total not to exceed price of performing this Contract.

IF FIXED UNIT PRICE

THIS FIXED UNIT PRICE CONTRACT is established at the Not to Exceed amount of $xxxxxxxx.

Subject to the terms and conditions of the Contract Documents, Contractor agrees to furnish all materials and to perform all work as set forth in its proposal and as required by the Contract Documents.

All pricing is in accordance with the fixed unit prices found in Schedule A, as proposed by the Contractor. Payment made for actual quantities as set forth in Schedule B, General Construction Terms and Conditions. At no time shall the total obligation of the City exceed the not to exceed amount of this Contract.

3. TERM OF CONTRACT

Contractor will start work promptly after the Notice to Proceed and continue to work diligently until completed. The Contractor shall complete all work on an as ordered basis throughout the Contract period which is **_____ Calendar Days** after the Notice-to-Proceed ("Period of Performance") as per the specifications and drawings. The Contractor shall provide a two-year guarantee on all work performed under this Contract after the job has been completed and accepted.

4. INSURANCE

The Contractor shall provide and maintain acceptable Insurance Policy(s) consistent with the Minimum Insurance Requirements attached as Schedule F, which includes Property, Liability, and as otherwise listed in Schedule F. The City of Colorado Springs shall be reflected as an additional insured on the Property and Liability policy(s).

Further, Contractor understands and agrees that Contractor shall have no right of coverage under any existing or future City comprehensive, self, or personal injury policies. Contractor shall provide insurance coverage for and on behalf of Contract that will sufficiently protect Contractor, or Contractor's agents, employees, servants or other personnel, in connection with the services which are to be provided by Contractor pursuant to this Contract, including protection from claims for bodily injury, death, property damage, and lost income. Contractor shall provide worker's compensation insurance coverage for Contractor and all Contractor personnel. Contractor shall file applicable insurance certificates with the City and shall also provide additional insurance as indicated in this Contract. ***A CURRENT CERTIFICATE OF INSURANCE IS REQUIRED PRIOR TO COMMENCEMENT OF SERVICES LISTING THE CITY AS ADDITIONALLY INSURED.***

5. RESPONSIBILITY OF THE CONTRACTOR

A. The Contractor shall be responsible for the professional quality, technical accuracy, and the coordination of all Scope of Work services furnished by the Contractor under this Contract. The Contractor shall, without additional compensation, correct or revise any errors or deficiencies in services provided under this Contract to the satisfaction of the City.

B. The City's review, approval of, acceptance of, or payment for the services required under this Contract shall not be construed to operate as a waiver of any rights under this Contract or of any cause of action arising out of the performance of this Contract, and the Contractor shall be and remain liable to the City for any and all damages to the City caused by the Contractor's negligent performance of any of the services furnished under this Contract.

C. The rights and remedies of the City provided for under this Contract are in addition to any other rights and remedies provided by law.

D. If the Contractor is comprised of more than one legal entity, each such entity shall be jointly and severally liable hereunder.

6. WORK OVERSIGHT

A. The extent and character of the work to be done by the Contractor shall be subject to the general approval of the City's delegated Project Manager.

B. If any of the work or services being performed does not conform with Contract requirements, the City may require the Contractor to perform the work or services again in conformity with Contract requirements, at no increase in Contract amount. When defects in work or services cannot be corrected by re-performance, the City may (1) require the Contractor to take necessary action to ensure that future

performance conforms to Contract requirements and (2) reduce the Contract price to reflect the reduced value of the work or services performed.

C. If the Contractor fails to promptly perform the defective work or services again or to take the necessary action to ensure future performance is in conformity with Contract requirements, the City may (1) by Contract or otherwise, perform the services and charge to the Contractor any cost incurred by the City that is directly related to the performance of such work or service or (2) terminate the Contract for breach of contract.

7. SUBCONTRACTORS, ASSOCIATES, AND OTHER CONTRACTORS

A. Any subcontractor, outside associates, or other contractors used by the Contractor in connection with Contractor's work under this Contract shall be limited to individuals or firms that are specifically identified by the Contractor in the Contractor's proposal and agreed to by the City. The Contractor shall obtain the City's Project Manager's written consent before making any substitution of these subcontractors, associates, or other contractors.

B. The Contractor shall include a flow down clause in all of its subcontracts, agreements with outside associates, and agreements with other contractors. The flow down clause shall cause all of the terms and conditions of this Contract, including all of the applicable parts of the Contract Documents, to be incorporated into all subcontracts, agreements with outside associates, and agreements with other contractors. The flow down clause shall provide clearly that there is no privity of contract between the City and the Contractor's subcontractors, outside associates, and other contractors.

8. KEY PERSONNEL

The key personnel listed in the proposal and/or below will be the individuals used in the performance of the work. If any of the listed key personnel leave employment or are otherwise not utilized in the performance of the work, approval to substitute must be obtained by the Contractor from the City's Project Manager. Any substitute shall have the same or a higher standard of qualifications that the key personnel possessed at the time of Contract award.

9. START AND CONTINUANCE OF WORK

It is further agreed that the Contractor will start work promptly and continue to work diligently until this Contract is completed.

10. APPROPRIATION OF FUNDS

This Contract is expressly made subject to the limitations of the Colorado Constitution and Section 7-60 of the Charter of the City of Colorado Springs. Nothing herein shall constitute, nor be deemed to constitute, the creation of a debt or multi-year fiscal obligation or an obligation of future appropriations by the City Council of Colorado Springs, contrary to Article X, § 20, Colo. Const., or any other constitutional, statutory, or charter debt limitation. Notwithstanding any other provision of this Contract, with respect to any financial obligation of the City which may arise under this Agreement in any fiscal year after the year of execution, in the event the budget or other means of appropriation for any such year fails to provide funds in sufficient amounts to discharge such obligation, such failure (i) shall act to terminate this Contract at such time as the then-existing and available appropriations are depleted, and (ii) neither such failure nor termination shall constitute a default or breach of this Contract, including any sub-agreement, attachment, schedule, or exhibit thereto, by the City. As used herein, the term “appropriation” shall mean and include the due adoption of an appropriation ordinance and budget and the approval of a Budget Detail Report (Resource Allocations) which contains an allocation of sufficient funds for the performance of fiscal obligations arising under this Contract.

11. CHANGES

The Contractor and the City agree and acknowledge as a part of this Contract that no change order or other form or order or directive may be issued by the City which requires additional compensable work to be performed, which work causes the aggregate amount payable under the Contract to exceed the amount appropriated for this Contract as listed above, unless the Contractor has been given a written assurance by the City that lawful appropriations to cover the costs of the additional work have been made or unless such work is covered under a remedy-granting provision of this Contract. The Contractor and the City further agree and acknowledge as a part of this Contract that no change order or other form or order or directive which requires additional compensable work to be performed under this Contract shall be issued by the City unless funds are available to pay such additional costs, and, regardless of any remedy-granting provision included within this Contract, the Contractor shall not be entitled to any additional compensation for any change which increases or decreases the Contract completion date, or for any additional compensable work performed under this Contract, and expressly waives any rights to additional compensation, whether by law or equity, unless, prior to commencing the additional work, the Contractor is given a written change order describing the change in Contract completion date or the additional compensable work to be performed, and setting forth the amount of compensation to be paid, and such change order is signed by the authorized City representative, as defined below. The amount of compensation to be paid, if any, shall be deemed to cover any and all additional, direct, indirect or other cost or expense or profit of the Contractor whatsoever. It is the Contractor's sole

responsibility to know, determine, and ascertain the authority of the City representative signing any change order under this Contract.

No change, amendment, or modification to this Contract shall be valid unless duly approved and issued in writing by the City of Colorado Springs Procurement Services Division. The City shall not be liable for any costs incurred by the Contractor resulting from work performed for changes not issued in writing by the City of Colorado Springs Procurement Services Division.

The following personnel are authorized to sign changes, amendments, or modifications to this Contract.

The Project Manager: Changes up to $14,999.99
The City of Colorado Springs Chief of Staff: Changes up to $499,999.99
The Mayor of the City of Colorado Springs: Unlimited

12. ASSIGNMENT

No assignment or transfer by the Contractor of this Contract or any part thereof or of the funds to be received thereunder by the Contractor will be recognized unless such assignment has had the prior written approval of the City and the surety has been given due notice of such assignment. Such written approval by the City shall not relieve the Contractor of the obligations under the terms of this Contract. In addition to the usual recitals in assignment contracts, the following language must be included in the assignment:

It is agreed that the funds to be paid to the assignee under this assignment are subject to a prior lien for services rendered or materials supplied for the performance of the work called for in said contract in favor of all persons, firms, or corporations rendering such services or supplying such materials.

13. CHOICE OF LAW

This Contract is subject to and shall be interpreted under the law of the State of Colorado, and the Charter, City Code, Ordinances, Rules and Regulations of the City of Colorado Springs, Colorado, a Colorado home rule city. Court venue and jurisdiction shall be exclusively in the Colorado District Court for El Paso County, Colorado. The Parties agree that the place of performance for this Contract is deemed to be in the City of Colorado Springs, El Paso County, State of Colorado. The Contractor shall ensure that the Contractor and the Contractor's employees, agents, officers and subcontractors are familiar with, and comply with, applicable Federal, State, and Local laws and regulations as now written or hereafter amended.

14. WORKERS' COMPENSATION INSURANCE

Contractor shall take out and maintain during the Period of Performance, Colorado Worker's Compensation Insurance for the Contractor and all employees of the Contractor. If any service is sublet by the Contractor, the Contractor shall require the subcontractor to provide the same coverage for the subcontractor and subcontractor's employees. Workers' Compensation Insurance shall include occupational disease provisions covering any obligations of the Contractor in accord with the provisions of the Workers' Compensation Act of Colorado.

15. INDEMNIFICATION

Contractor agrees that the Contractor shall indemnify, defend and hold harmless the City, its officers, employees and agents, from and against any and all loss, damage, injuries, claims, cause or causes of action, or any liability whatsoever resulting from, or arising out of, or in connection with the Contractor's obligations or actions under this Contract caused by any willful or negligent error, omission or act or a failure to observe any applicable standard of care by the Contractor or any person employed by it or anyone for whose acts the Contractor is legally liable. In consideration of the award of this Contract, to the extent damages are covered by insurance, the Contractor agrees to waive all rights of subrogation against the City, its subsidiary, parent, associated and/or affiliated entities, successors, or assigns, its elected officials, trustees, employees, agents, and volunteers for losses arising from the work performed by the Contractor for the City. The indemnification obligation shall survive the expiration or termination of this Contract

16. INDEPENDENT CONTRACTOR

In the performance of the Contractor's obligations under this Contract, it is understood, acknowledged and agreed between the parties that the Contractor is at all times acting and performing as an independent contractor, and the City shall neither have nor exercise any control or direction over the manner and means by which the Contractor performs the Contractor's obligations under this Contract, except as otherwise stated within the Contract terms. The City shall not provide any direction to the Contractor on the work necessary to complete the project. Contractor understands that it is an independent contractor responsible for knowing how to perform all work or tasks necessary to complete project. The Contractor understands and agrees that the Contractor and the Contractor's employees, agents, servants, or other personnel are not City employees. The Contractor shall be solely responsible for payment of salaries, wages, payroll taxes, unemployment benefits or any other form of compensation or benefit to the Contractor or any of the Contractor's employees, agents, servants or other personnel performing services or work under this Contract, whether it is of a direct or indirect nature. Further in that regard, it is expressly understood and agreed that for such purposes neither the Contractor nor the Contractor's employees, agents, servants or other personnel shall be entitled to any City payroll, insurance, unemployment, worker's compensation, retirement or any other benefits whatsoever.

17. APPLICABLE LAW AND LICENSES

In the conduct of the services or work contemplated in this Contract, the Contractor shall ensure that the Contractor and all subcontractors comply with all applicable state, federal and City and local law, rules and regulations, technical standards or specifications. The Contractor shall qualify for and obtain any required licenses prior to commencement of work.

18. PRIOR AGREEMENTS

This is a completely integrated Contract and contains the entire agreement between the parties. Any prior written or oral agreements or representations regarding this Contract shall be of no effect and shall not be binding on the City. This Contract may only be amended in writing, and executed by duly authorized representatives of the parties hereto.

19. INTELLECTUAL PROPERTY

The Parties hereby agree, and acknowledge, that all products, items writings, designs, models, examples, or other work product of the Contractor produced pursuant to this Contract are works made for hire, and that the City owns, has, and possesses any and all ownership rights and interests to any work products of the Contractor made under this Contract, including any and all copyright, trademark, or patent rights, and that compensation to the Contractor for Agreement and acknowledgment of this intellectual property right section of this Contract is included in any compensation or price whatsoever paid to the Contractor under this Contract. It is the intent of the parties that the City shall have full ownership and control of the Contractor's work products produced pursuant to this Contract, and the Contractor specifically waives and assigns to the City all rights which Contractor may have under the 1990 Visual Artists Rights Act, federal, and state law, as now written or later amended or provided. In the event any products, items writings, designs, models, examples, or other work product produced pursuant to this Contract is deemed by a court of competent jurisdiction not to be a work for hire under federal copyright laws, this intellectual property rights provision shall act as an irrevocable assignment to the City by the Contractor of any and all copyrights, trademark rights, or patent rights in the Contractor's products, items writings, designs, models, examples, or other work product produced pursuant to this Contract, including all rights in perpetuity. Under this irrevocable assignment, the Contractor hereby assigns to the City the sole and exclusive right, title, and interest in and to the Contractor's products, items writings, designs, models, examples, or other work product produced pursuant to this Contract, without further consideration, and agrees to assist the City in registering and from time to time enforcing all copyrights and other rights and protections relating to the Contractor's products, items writings, designs, models, examples, or other work product in any and all countries. It is the Contractor's specific intent to assign all right, title, and interest whatsoever in any and all copyright rights in the Contractor's

products, items writings, designs, models, examples, or other work product produced pursuant to this Contract, in any media and for any purpose, including all rights of renewal and extension, to the City. To that end, the Contractor agrees to execute and deliver all necessary documents requested by the City in connection therewith and appoints the City as Contractor's agent and attorney-in-fact to act for and in Contractor's behalf and stead to execute, register, and file any such applications, and to do all other lawfully permitted acts to further the registration, prosecution, issuance, renewals, and extensions of copyrights or other protections with the same legal force and effect as if executed by the Contractor; further, the parties expressly agree that the provisions of this intellectual property rights section shall be binding upon the parties and their heirs, legal representatives, successors, and assigns.

20. WAIVERS

No waiver of default by the City of any of the terms, covenants, and conditions hereof to be performed, kept, and observed by the Contractor shall be construed, or shall operate, as a waiver of any subsequent default of any of the terms, covenants, or conditions herein contained to be performed, kept, and observed by the Contractor.

21. THIRD PARTIES

It is expressly understood and agreed that enforcement of the terms and conditions of this Contract, and all rights of action relating to such enforcement, shall be strictly reserved to the Parties hereto, and nothing contained in this Contract shall give or allow any such claim or right of action by any other or third person or entity on such Contract. It is the express intention of the Parties hereto that any person or entity, other than the Parties to this Contract, receiving services or benefits under this Contract shall be deemed to be incidental beneficiaries only.

22. TERMINATION

A. Termination for Convenience.
By signing this Contract, Contractor represents that it is a sophisticated business and enters into the Contract voluntarily, has calculated all business risks associated with this Contract, and understands and assumes all risks of being terminated for convenience, whether such risks are known or not known. Contractor agrees that the City may terminate this Contract at any time for convenience of the City, upon written notice to the Contractor. Contractor expressly agrees to and assumes the risk that the City shall not be liable for any costs or fees of whatsoever kind and nature if termination for convenience occurs before Contractor begins any work or portion of the work. Contractor further expressly agrees and assumes the risks that the City shall not be liable for any unperformed work, anticipated profits, overhead, mobilizations costs, set-up, demobilization costs, relocation costs of employees, layoffs or severance costs, administrative costs, productivity costs, losses on disposal of equipment or materials, cost associated with the termination of subcontractors,

costs associated with purchase orders or purchases, or any other costs or fees of any kind and nature, if Contractor has started or performed portions of the Contract prior to receiving notice from the City. The City shall be liable only for the portions of work Contractor actually satisfactorily completed up to the point of the issuance of the Notice of Termination for convenience. Upon receipt of this notice the Contractor shall immediately: discontinue all services affected (unless the notice directs otherwise), and deliver to the City all data, drawings, specifications, reports, estimates, summaries, and other information and materials accumulated in performing this Contract, whether completed or in process.

B. Termination for Cause: The occurrence of any one or more of the following events ("Event of Default") will justify termination for cause:

i. Contractor's failure to perform the work in accordance with the Contract Documents (including, but not limited to, failure to supply sufficient skilled workers or suitable materials or equipment or failure to adhere to the progress schedule as adjusted from time to time.

ii. Contractor's disregard of the laws or regulations of any public body having jurisdiction.

iii. Contractor's disregard of the authority of Project Manager.

iv. Contractor's violation in any material provision of the Contract Documents.

v. Contractor's failure to make prompt payments to its subcontractors, and suppliers of any tier, or laborers or any person working on the work by, through, or under the Contractor or any of them, any all of their employees, officers, servants, members, and agents.

vi. Contractor files a petition commencing a voluntary case under the U.S. Bankruptcy Code, or for liquidation, reorganization, or an arrangement pursuant to any other U.S. or state bankruptcy Laws, or shall be adjudicated a debtor or be declared bankrupt or insolvent under the U.S. Bankruptcy Code, or any other federal or state laws relating to bankruptcy, insolvency, winding-up, or adjustment of debts, or makes a general assignment for the benefit of creditors, or admits in writing its inability to pay its debts generally as they become due, or if a petition commencing an involuntary case under the U.S. Bankruptcy Code or an answer proposing the adjudication of Contractor as a debtor or bankrupt or proposing its liquidation or reorganization pursuant to the Bankruptcy Code or any other U.S. federal or state bankruptcy laws is filed in any court and Contractor consents to or acquiesces in the filing of that pleading or the petition or answer is not discharged or denied within sixty (60) Calendar Days after it is filed.

vii. A custodian, receiver, trustee or liquidator of Contractor, all or substantially all of the assets or business of Contractor, or of Contractor's interest in the Work or the Contract, is appointed in any proceeding brought against Contractor and not discharged within sixty (60) Calendar Days after that appointment, or if Contractor shall consent to or acquiesces in that appointment.

viii. Contractor fails to commence correction of defective work or fails to correct defective work within a reasonable period of time after written notice.

If one or more of the events identified in Paragraphs i-viii above occur, City may give Contractor written notice of the event and direct the event be cured. Any such Notice to Cure will provide Contractor a minimum of ten (10) calendar days to prepare and submit to the Project Manager a plan to correct the Event of Default. If such plan to correct the Event of Default is not submitted to the Project Manager within ten (10) days after the date of the written notice or such plan is unacceptable to the City, the City may, give Contractor (and the Surety, if any) written notice that Contractor's services are being terminated for cause. Upon delivery of the termination notice, City may terminate the services of Contractor in whole or in part, exclude Contractor from the site, and take possession of the work and of all Contractor's tools, appliances, construction equipment, and machinery at the project site, and use the same to the full extent they could be used by Contractor (without liability to Contractor for trespass or conversion), incorporate in the work all materials and equipment stored at the site or for which City has paid Contractor but which are stored elsewhere, and finish the work as City may deem expedient. In such case, Contractor shall not be entitled to receive any further payment until Certificate of Completion of the work. In the event City terminates this Contract for Cause and the cost of completing the work exceeds the unpaid balance of the Contract price, Contractor shall pay City for any costs of completion which exceed the Contract price when combined with all amounts previously paid to Contractor. When exercising any rights or remedies under this paragraph City shall not be required to obtain the lowest price for the work performed. Should the cost of such completion, including all proper charges, be less than the original Contract price, the amount so saved shall accrue to the City. Neither the City nor any officer, agent or employee of the City shall be in any way liable or accountable to the Contractor or the Surety for the method by which the completion of the said work, or any portion thereof, may be accomplished or for the price paid.

Where Contractor's services have been so terminated by City, the termination will not affect any rights or remedies of City against Contractor or Surety then existing or which may thereafter accrue. Any retention or payment of moneys due Contractor by City will not release Contractor from liability.

C. Termination Notice. Upon receipt of a termination notice, whether for convenience or cause, the Contractor shall immediately: discontinue all services affected (unless the notice directs otherwise), and deliver to the City all data, drawings, specifications,

reports, estimates, summaries, and other information and materials accumulated in performing this Contract, whether completed or in process.

D. Removal of Equipment. Except as provided above, in the case of termination of this Contract before completion from any cause whatever, the Contractor, if notified to do so by the City, shall promptly remove any part or all of Contractor's equipment and supplies from the property of the City, failing which the City shall have the right to remove such equipment and supplies at the expense of the Contractor.

23. BOOKS OF ACCOUNT AND AUDITING

The Contractor shall make available to the City if requested, true and complete records, which support billing statements, reports, performance indices, and all other related documentation. The City's authorized representatives shall have access during reasonable hours to all records, which are deemed appropriate to auditing billing statements, reports, performance indices, and all other related documentation. The Contractor agrees that it will keep and preserve for at least seven years all documents related to the Contract which are routinely prepared, collected or compiled by the Contractor during the performance of this Contract.

The City's Auditor and the Auditor's authorized representatives shall have the right at any time to audit all of the related documentation. The Contractor shall make all documentation available for examination at the Auditor's request at either the Auditor's or Contractor's offices, and without expense to the City.

24. ILLEGAL ALIENS

Illegal Aliens - Public Contracts for Services - Compliance with Title 8, Article 17.5, Colorado Revised Statutes: The Contractor acknowledges, understands, agrees, and certifies that: In the performance of any work or the provision of any services by the Contractor under this Contract, the Contractor shall not knowingly employ or contract with an illegal alien to perform work under this Contract; or enter into a contract with any subcontractor that fails to certify to the Contractor that the subcontractor shall not knowingly employ or contract with an illegal alien to perform work under this Contract or under the subcontract to this Contract. The Contractor certifies in accord with Section 8-17.5-102(1) C.R.S. that, on the date the Contractor signs this Contract, the Contractor does not knowingly employ or Contract with an illegal alien who will perform work under this Contract and that the Contractor shall participate in the e-verify program or Colorado Department of Labor and Employment program in order to confirm the employment eligibility of all employees who are newly hired for employment or to perform work under this Contract. The Contractor is expressly prohibited from using the e-verify program or Colorado Department of Labor and Employment program procedures to undertake pre-employment screening of job applicants while this Contract and any services under this Contract are being performed. If the Contractor obtains actual knowledge that a subcontractor performing

work under this Contract for services knowingly employs or contracts with an illegal alien, the Contractor shall notify the subcontractor and the City within three days that the Contractor has actual knowledge that the subcontractor is employing or contracting with an illegal alien, and terminate the subcontract with the subcontractor if within three days of receiving the notice the subcontractor does not stop employing or contracting with the illegal alien; except that the Contractor shall not terminate the Contract with the subcontractor if during the three days the subcontractor provides information to establish that the subcontractor has not knowingly employed or contracted with an illegal alien. The Contractor shall comply with any request by the City, federal government, or the Colorado Department of Labor and Employment made in the course of an investigation. If the Contractor violates or fails to comply with any provision of C.R.S. 8-17.5-101 et seq, the City may terminate this Contract for breach of contract. If this Contract is so terminated, the Contractor shall be liable for any actual and consequential damages to the City.

25. COMPLIANCE WITH IMMIGRATION REFORM AND CONTROL ACT OF 1986

Contractor certifies that Contractor has complied with the United States Immigration Reform and Control Act of 1986. All persons employed by Contractor for performance of this Contract have completed and signed Form I-9 verifying their identities and authorization for employment.

26. LABOR

The Contractor shall employ only competent and skilled workmen and foremen in the conduct of work on this Contract. The Contractor shall at all times enforce strict discipline and good order among Contractor's employees. The Project Manager shall have the authority to order the removal from the work of any person, including Contractor's or any subcontractor’s employees, who refuses or neglects to observe any of the provisions of these Plans or Specifications, or who is incompetent, abusive, threatening, or disorderly in conduct and any such person shall not again be employed on the Project.

In accord with the Keep Jobs in Colorado Act, codified at sections 8-17-101, et seq., C.R.S., Colorado labor shall be employed to perform the work to the extent of not less than eighty percent (80%) of each type or class of labor in the several classifications of skilled and common labor employed on this Project et seq.=; provided however, that this paragraph shall not apply if the Project receives federal funding.

In no event shall the City be responsible for overtime pay.

27. GRATUITIES

A. This Contract may be terminated if the Mayor, the Mayor’s designee, and/or the Procurement Services Manager determine, in their sole discretion, that the

Contractor or any officer, employee, agent, or other representative whatsoever, of the Contractor offered or gave a gift or hospitality to a City officer, employee, agent or Contractor for the purpose of influencing any decision to grant a City contract or to obtain favorable treatment under any City contract.

B. The terms "hospitality" and "gift" include, but are not limited to, any payment, subscription, advance, forbearance, acceptance, rendering or deposit of money, services, or anything of value given or offered, including but not limited to food, lodging, transportation, recreation or entertainment, token or award.

C. Contract termination under this provision shall constitute a breach of contract by the Contractor, and the Contractor shall be liable to the City for all costs of reletting the contract or completion of the project. Further, if the Contractor is terminated under this provision, or violates this provision but is not terminated, the Contractor shall be subject to debarment under the City's Procurement Regulations. The rights and remedies of the City provided in this clause shall not be exclusive and are in addition to any other rights and remedies provided by law or under this Contract.

28. NON-DISCRIMINATION

A. In accord with section 24-34-402, C.R.S., the Contractor will not discriminate against any employee or applicant for employment because of disability, race, creed, color, sexual orientation, religion, age, national origin, or ancestry. But, with regard to a disability, it is not a discriminatory or an unfair employment practice for an employer to take into consideration disability if there is no reasonable accommodation that the employer can make with regard to the disability, the disability actually disqualifies the person from the job, and the disability has a significant impact on the job. The Contractor will take affirmative action to ensure that applicants are employed, and that employees are treated during employment without regard to their disability, race, creed, color, sexual orientation, religion, age, national origin, or ancestry. Such actions shall include, but not be limited to, the following: employment, upgrading, demotion, or transfer; recruitment or recruitment advertising; layoff or termination; rates of pay or other forms of compensation; and selection for training; including apprenticeship.

B. The Contractor agrees to post in conspicuous places, available to employees and applicants for employment, notices to be provided setting forth the provisions of this nondiscrimination clause.

C. The Contractor will, in all solicitations or advertisements for employees placed by or on behalf of the Contractor, state that all qualified applicants will receive consideration for employment without regard to disability, race, creed, color, sexual orientation, religion, age, national origin, or ancestry.

D. Contractor will cooperate with the City in using Contractor's best efforts to ensure that Disadvantaged Business Enterprises are afforded the maximum opportunity to compete for subcontracts or work under this Contract.

29. ORDER OF PRECEDENCE

Any inconsistency in this Contract shall be resolved by giving precedence in the following order:

A. This Contract document with its terms and conditions
B. Specific Construction Terms and Conditions
C. General Construction Terms and Conditions
D. The Statement of Work
E. Standard Specifications
F. General Specifications
G. Other Appendices, Attachments, or Exhibits

30. HEADINGS

The section headings contained in this Contract are for reference purposes only and shall not affect the meaning or interpretation of this Contract.

31. DISPUTES

A. All administrative and contractual disputes arising from or related to this Contract other than those arising under Unanticipated Circumstances provisions (in section107.27 of Schedule B General Construction Terms and Conditions) shall be addressed in the following manner:
   i. If either Party disputes or disagrees with a Contract term or the other Party's interpretation of a Contract term or has any other administrative or contractual dispute not addressed in the Unanticipated Circumstances provisions, such Party shall promptly give the other Party written notice of said dispute.
   ii. The Parties shall hold a meeting as soon as reasonably possible, but in no event later than thirty (30) calendar days from the initial written notice of the dispute, attended by persons with decision-making authority regarding the dispute, to attempt in good faith to negotiate a resolution of the dispute; provided, however, that no such meeting shall be deemed to vitiate or reduce the obligations and liabilities of the Parties or be deemed a waiver by a Party of any remedies to which such Party would otherwise be entitled unless otherwise agreed to by the Parties in writing.
   iii. If, within thirty (30) calendar days after such meeting, the Parties have not succeeded in negotiating a resolution of the dispute, they agree to submit the dispute to non-binding mediation and to bear equally the costs of the mediation.

iv. The Parties will jointly appoint a mutually acceptable mediator. If they fail to do so within twenty (20) calendar days from the conclusion of the negotiation period, they shall each select a mediator. The two mediators will then appoint a third mediator who shall conduct mediation for the Parties as the sole mediator.

v. The Parties agree to participate in good faith in the mediation and negotiations for a period of thirty (30) calendar days. The substantive and procedural law of the State of Colorado shall apply to the proceedings. If the Parties are not successful in resolving the dispute through mediation, then the Parties shall be free to pursue any other remedy afforded by the laws of the State of Colorado.

vi. Until final resolution of any dispute hereunder, the Contractor shall diligently proceed with the performance of this Contract as directed by the City. For purposes of this Contract, termination for convenience shall not be deemed a dispute. The City of Colorado Springs and the Contractor agree to notify each other in a timely manner of any claim, dispute, or cause of action arising from or related to this Contract, and to negotiate in good faith to resolve any such claim, dispute, or cause of action. To the extent that such negotiations fail, the City of Colorado Springs and the Contractor agree that any lawsuit or cause of action that arises from or is related to this Contract shall be filed with and litigated only by the Colorado District Court for El Paso County, CO.

32. DELIVERY

The City may cancel this Contract or any portion thereof if delivery is not made when and as specified, time being of the essence in this Contract. Contractor shall pay the City for any loss or damage sustained by the City because of failure to perform in accordance with this Contract.

33. PAYMENTS

All invoices shall be sent to the Project Manager identified in this Contract.

The City will pay the Contractor, upon submission of proper invoices, the prices stipulated in the Contract for services rendered and accepted, less any deductions provided in this Contract within 30 days (Net 30). The City will not pay late fees or interest. Any discount payment terms offered on the invoice may be taken by the City.

All payments for Construction will be made in accordance with the Payment provisions found in Schedule B – General Construction Terms and Conditions.

Each invoice must contain at least the following information:

Contract number, issued purchase order number, invoice number, invoice date, timeframe covered by invoice, type and amount of labor and materials used for that time period, dollar amount in unit price, extended price, and total value of invoice.

IF T&M

The City will make payments for services on a monthly basis for services performed during the previous month in accordance with this Contract. All labor Invoices shall include labor categories, rates, hours worked, and total amounts per category. All labor categories and rates charged must be included in this Contract. No other categories or rates will be allowed or payable. All labor invoices are subject to City approval.

Materials will be payable on a reimbursable basis with no additional profit, fee, overhead, handling, or General and Administrative (G&A) costs. All costs for materials shall be approved by the City Contracts Specialist before the costs are incurred and payable.

The City will pay the Contractor, upon submission of proper invoices, the prices stipulated in the Contract for services rendered and accepted, less any deductions provided in this Contract within 30 days (Net 30). The City will not pay late fees or interest. Any discount payment terms offered on the invoice may be taken by the City.

34. INSPECTION OF SERVICES

The Contractor is responsible for performing or having performed all inspections and tests necessary to substantiate that the services furnished under this Contract conform to Contract requirements, including any applicable technical requirements for specified manufacturers' parts. This clause takes precedence over any City inspection and testing required in the Contract's specifications, except for specialized inspections or tests specified to be performed solely by the City.

A. Definition of "services", as used in this clause, includes services performed, workmanship, and material furnished or utilized in the performance of services.

B. The Contractor shall provide and maintain an inspection system acceptable to the City covering the services under this Contract. Complete records of all inspection work performed by the Contractor shall be maintained and made available to the City during Contract performance and for as long afterwards as the Contract requires.

C. The City has the right to inspect and test all services called for by the Contract, to the extent practicable at all times and places during the term of the Contract. The City will perform inspections and tests in a manner that will not unduly delay the work.

D. If the City performs inspections or test on the premises of the Contractor or a subcontractor, the Contractor shall furnish, and shall require subcontractors to furnish, at no increase in Contract price, all reasonable facilities and assistance for the safe and convenient performance of these duties.

35. SECURITY

The City maintains security requirements regarding access to City buildings and other City workplaces and worksites on City property. All Contractor personnel accessing City buildings, workplaces, or worksites, may be required to produce a valid, Government issued picture identification. Contractor personnel lacking such identification may not be allowed access to such sites. No costs incurred by the Contractor due to City security requirements shall be allowable or payable under this Contract.

36. TIME IS OF THE ESSENCE

In as much as the Contract concerns a needed or required service, the terms, conditions, and provisions of the Contract relating to the time of performance and completion of work are of the essence of this Contract. The Contractor shall begin work on the day specified and shall prosecute the work diligently so as to assure completion of the work within the number of calendar days or date specified, or the date to which the time for completion may have been extended.

37. EMPLOYMENT OF LABOR

The Contractor shall comply with, and defend and hold the City harmless from any violation of all laws and lawful rules and regulations, both of the State of Colorado and of the United States, relating to Workmen's Compensation, unemployment compensation, Social Security, payment for overtime, and all other expenses and conditions of employment under this Contract.

38. SALES TAX

The Contractor must have a tax-exemption certificate from the Colorado Department of Revenue for this project. The certificate does not apply to City of Colorado Springs Sales and Use Tax which shall be applicable. The tax exempt project number and the exemption certificate only applies to County, PPRTA (Pikes Peak Rural Transportation Authority), and State taxes when purchasing construction and building materials **to be incorporated into this project**.

Furthermore, the <u>exemption</u> **does not** include or apply to the purchase or rental of equipment, supplies or materials that **do not become a part of the completed**

project or structure. Such purchases and rentals are subject to full applicable taxation.

All contracts with subcontractors must include the City of Colorado Springs Sales and Use Tax on the work covered by the Contract, and other taxes as applicable.

Note: For all equipment, materials and supplies incorporated into the work purchased from vendors or suppliers not licensed to collect City Sales Tax (i.e. out of state suppliers, etc.), City Use Tax is due and payable to the City. The Contractor shall execute and deliver, and shall cause the Contractor's subcontractors to execute and deliver to the City Sales Tax Office, ST 16 forms listing all said equipment, materials and supplies and the corresponding use tax due, along with payment for said taxes. Any outstanding taxes due may be withheld from the final payment due the Contractor and may result in suspension of Contractor from bidding on City projects.

Forms and instructions can be downloaded at https://coloradosprings.gov/sales-tax/page/additional-sales-tax-forms?mlid=30771 Questions can be directed to the City Sales Tax Division at (719) 385-5903.

Our Registration Numbers are as follows:
City of Colorado Springs
Federal I.D.: 84-6000573
Federal Excise: A-138557
State Sales Tax: 98-03479

The Contractor's payment or exemption of State of Colorado, El Paso County and City Sales and Use Taxes shall be as specified herein.

39. SEVERABILITY

If any terms, conditions, or provisions of this Contract shall be held unconstitutional, illegal, or void, such finding shall not affect any other terms, conditions, or provisions of this Contract.

40. LIABILITY OF CITY EMPLOYEES

All authorized representatives of the City are acting solely as agents and representatives of the City when carrying out and exercising the power or authority granted to them under the Contract. There shall not be any liability on them either personally or as employees of the City.

41. USE OF CITY NAME OR LOGO

Except as otherwise provided in this Contract, the Contractor shall not refer to this Contract or the City of Colorado Springs in any advertising or promotions in such a

manner as to state or imply that the product or service provided is endorsed or preferred by the City of Colorado Springs, its employees, or its Departments, or is considered by these entities to be superior to other products or services. Any use of the name or logo of the City of Colorado Springs in advertising or promotions must be approved in writing by the City of Colorado Springs Contracts Specialist assigned to the Contract prior to such use.

42. TRAVEL

If travel expenses are included as a line item in this Contract, all travel expenses incurred and billable by the Contractor are subject to City approval. Air travel shall be limited to the round trip "economy coach" fare. Travel from the Colorado Springs Airport is encouraged. Unless there are extenuating circumstances, the Contract should take advantage of lower airfares by purchasing tickets more than 14 days in advance of travel. In-state travel by air must be more economical than travel by private vehicle. Use of a private vehicle may be reimbursed per mile at the current rate published by the IRS annually. Short-term parking, long-term parking or cab fare associated with airport departure and arrival may be allowable expenses. Valet parking will not be allowed unless it is the least expensive or only option. Car rental rates may be reimbursed for car rentals no greater than the intermediate or standard classification. The City will not reimburse any other travel methods or expenses. The City will pay for lodging, meals, and miscellaneous expenses on a per diem basis only, in accordance with the current per deim rates published by the IRS annually. The City will not pay for Contractor expenses exceeding the per deim rates. Receipts for all reimbursable expenses must be provided with the Contractor's invoice.

43. APPENDICES

The following Appendices are made a part of this Agreement:

1. Appendix A – Additional Terms and Conditions
2. Appendix B – Contractor's Proposal,
3. Appendix C – Statement of Work.
4. Appendix E – Exhibits from the RFP
   - Performance Bond (Exhibit 8 of the RFP)
   - Labor and Material Payment Bond (Exhibit 9 of the RFP)
   - Maintenance Bond (Exhibit 10 of the RFP)
   - Notification of Utilities (Exhibit 11 of the RFP)
5. Schedule A – Proposal Price Sheet
6. Schedule B – General Construction Terms and Conditions
7. Schedule C – Special Construction Terms and Conditions
8. Schedule D – Standard Specifications
9. Schedule E – Special Specifications
10. Schedule F – Insurance Requirements

CONTRACT SIGNATURE PAGE

The Contractor certifies in accord with Section 8-17.5-102(1) C.R.S. that, on the date the Contractor signs this Contract, the Contractor does not knowingly employ or Contract with an illegal alien who will perform work under this Contract and that the Contractor shall participate in the e-verify program or Colorado Department of Labor and Employment program in order to confirm the employment eligibility of all employees who are newly hired for employment or to perform work under this Contract. The Contractor is expressly prohibited from using the e-verify program or Colorado Department of Labor and Employment program procedures to undertake pre-employment screening of job applicants while this Contract and any services under this Contract are being performed.

IN WITNESS WHEREOF, the parties have caused these presents to be executed on the day and the year first above written.

This Contract is executed in one (1) original copy.

THE CITY OF COLORADO SPRINGS, COLORADO:

SECOND PARTY: SAMPLE CONTRACT ONLY	
Corporate Name	
Signature	Date
Title	

EXHIBIT 3 – EXCEPTIONS

Print the words "no exceptions"(here)_____ if there are no exceptions taken to any of the terms, conditions, or specifications of these proposal documents or contract.

If there are exceptions taken to any of the terms, conditions, or specifications of the proposal document or contract, they must be clearly stated on a separate sheet of paper attached to this sheet and returned with your proposal.

Note: All potential Offerors are hereby advised that exceptions taken may be considered during the evaluation phase which may affect the final scoring of proposals. Offerors stipulating that the City must use their contract or agreement may be determined non-responsive and their Proposal determined unacceptable.

Company Name: _____

Address: _____
(City, State and Zip Code)

Authorized Signature: _____

Date: _____

Printed Name/Title: _____

Return this form with your Proposal.

EXHIBIT 4 – MINIMUM INSURANCE REQUIREMENTS

The following listed minimum insurance requirements shall be carried by all contractors and consultants unless otherwise specified in the City's solicitation package, Special Provisions, or Standard Specifications.

1.	X	Commercial General Liability for limits not less than $1,000,000 combined single limit with $2,000,000 aggregate for bodily injury and property damage for each occurrence. Coverage shall include blanket contractual, broad form property damage, products and completed operations.
2.	X	Workers' Compensation and Employers Liability as required by statute. Employers Liability coverage is to be carried for a minimum limit of $100,000.
3.	X	Automobile Liability covering any auto (including owned, hired, and non-owned autos) with a minimum of $1,000,000 each accident combined single limit.

Except for workers' compensation and employer's liability insurance, the **City of Colorado Springs must be named as an additional insured**. Certificates of Insurance must be submitted before commencing the work and provide 30 days' notice prior to any cancellation, non-renewal, or material changes to policies required under the contract.

All coverage furnished by contractor is primary, and any insurance held by the City of Colorado Springs is excess and non-contributory.

The undersigned certifies and agrees to carry and maintain the insurance requirements indicated above throughout the contract Period of Performance.

_____
(Name of Company)

_____
(Signature) *(Date)*

EXHIBIT 5 – RESERVED

EXHIBIT 6 – QUALIFICATION STATEMENT

CITY OF COLORADO SPRINGS
QUALIFICATION STATEMENT

This statement will provide information which will enable the City to evaluate the qualifications of your firm and staff with regard to the requirements of this Request for Proposal. Please complete this form in its entirety and submit it (in the number of copies requested) along with the other required proposal documents. If a request in the Qualification Statement is contained in the proposal, indicate the section in the proposal where that information can be found.

(PRINT)
FIRM NAME: _____
ADDRESS: _____
CITY STATE ZIP: _____
AUTHORIZED REPRESENTATIVE: _____
TITLE: _____
AUTHORIZED SIGNATURE: _____
PHONE: _____ FAX: _____
E-MAIL ADDRESS: _____

1. TYPE OF BUSINESS

CORPORATION ☐ INDIVIDUAL ☐
PARTNERSHIP ☐ JOINT VENTURE ☐
OTHER: _____

2. TYPE OF LICENSE & LOCATION

_____
_____
_____

3. TYPE OF SERVICE TO BE PROVIDED FOR RFP: _____
_____

4. NUMBER OF YEARS IN BUSINESS: _____

5. ON A SEPARATE SHEET PROVIDE A BRIEF HISTORY OF YOUR FIRM, STAFF SIZE AND EXPERIENCE. SUBMIT A RESUME FOR THE PROJECT MANAGER AND EACH KEY PERSONNEL ASSIGNED TO THIS PROJECT.

6. WHAT OTHER NAME(S) HAS YOUR COMPANY OPERATED UNDER: _____
_____

7. HAVE YOU OR YOUR FIRM EVER FAILED TO COMPLETE ANY WORK AWARDED TO YOU? YES ☐ NO ☐ IF "YES", EXPLAIN:
_____
_____
_____

8. HAS ANY OFFICER OR PARTNER OF YOUR ORGANIZATION EVER BEEN AN OFFICER OR PARTNER OF ANOTHER ORGANIZATION THAT FAILED TO COMPLETE A CONTRACT WITHIN THE LAST FIVE (5) YEARS? YES ☐ NO ☐
IF "YES", EXPLAIN:

RFP YR-NMBR
QUALIFICATION STATEMENT – PAGE 2

9. HAS YOUR FIRM OR ANY PARTNERS OR OFFICERS EVER BEEN INVOLVED IN ANY BANKRUPTCY ACTION? YES ☐ NO ☐ IF "YES", EXPLAIN:

_____
_____
_____
_____

10. ARE YOU PRESENTLY INVOLVED IN ANY LITIGATION WITH ANY GOVERNMENT AGENCY? YES ☐ NO ☐ IF "YES", EXPLAIN TYPE, KIND, PLAINTIFF, DEFENDANT, ETC., AND STATE THE CURRENT STATUS:

_____
_____
_____
_____

11. BANK REFERENCE: _____
ADDRESS: _____
CONTACT: PHONE:

12. LIST THREE (3) SIMILAR PROJECTS (LOCAL OR STATE-WIDE) **FROM LAST FIVE (5) YEARS**-INCLUDE LOCATION OF PROJECT, SIZE OF PROJECT (CONTRACT AMOUNT), CONTACT NAME, ADDRESS, TELEPHONE NUMBERS
NOTE: DETAILED INFORMATION ON THESE PROJECTS MAY ALSO BE REQUESTED IN THE RFP PACKAGE.

1. Location of Project:
Size of Project:
Contract Amount:
Contact Name and Title:
Contract Address:
Contact telephone and FAX Numbers:

2. Location of Project:
Size of Project:
Contract Amount:
Contact Name:
Contact Address:
Contact telephone and FAX Numbers:

3. Location of Project:
Size of Project:
Contract Amount:
Contact Name:
Contact Address:
Contact telephone and FAX Numbers:

13. LIST **CURRENT** SIMILAR PROJECTS (LOCAL OR STATE-WIDE) UNDER CONTRACT-INCLUDE LOCATION OF PROJECT, SIZE OF PROJECT (CONTRACT AMOUNT) CONTACT NAME, ADDRESS, TELEPHONE NUMBERS.
NOTE: DETAILED INFORMATION ON THESE PROJECTS MAY ALSO BE REQUESTED IN THE RFP PACKAGE.

1. Location of Project:
Size of Project:
Contract Amount:
Contact Name and Title:

Contact Address:

Contact telephone and FAX Numbers:

2. Location of Project:
Size of Project:
Contract Amount:
Contact Name and Title:
Contact Address:
Contact telephone and FAX Numbers:

3. Location of Project:
Size of Project:
Contract Amount:
Contact Name and Title:
Contact Address:
Contact telephone and FAX Numbers:

14. LIST OF SUB-CONTRACTORS TO BE USED FOR THIS PROJECT:
(INCLUDE NAME, ADDRESS, TELEPHONE NUMBER, TYPE OF WORK)

1. Name:
Address:
Telephone Number:
Type of Work:

2. Name:
Address:
Telephone Number:
Type of Work:

3. Name:
Address:
Telephone Number:
Type of Work:

IF ADDITIONAL INFORMATION IS PROVIDED ON A SEPARATE SHEET FOR ANY OF THE ITEMS, CLEARLY SPECIFY WHERE IT CAN BE LOCATED IN YOUR PROPOSAL PACKAGE.

EXHIBIT 7 – EVALUATION SCORESHEET

PROPOSAL EVALUATION SCORESHEET

SOLICITATION NUMBER AND TITLE:

Proposer's Name: _____

Evaluator's Name: _____

RFP EVALUATION CRITERIA DESCRIPTION	SCORE
1. PROJECT APPROACH (30 POINTS)	
In the Project Approach Area, the Offeror should address each work area in sufficient detail to demonstrate a clear and full understanding of the work, clearly present proposed solutions, and indicate that it has performed adequate planning to accomplish tasks as defined in the Statement of Work. Innovations, efficiencies, and detailed specifics are all encouraged. The Offeror should also provide a plan of operation, to include management of personnel, workload, schedule, and budget. An organization chart should be provided which demonstrates clear and effective lines of authority, responsibility, and communication for management, supervisory, and construction personnel. Further, the Offeror should provide evidence of sufficient planning to ensure the work is completed on schedule and within budget. The Offeror must at least address the following areas: 1. *Resources*. Discuss your approach to execution of the work. a. How many full-time construction crews are available to be committed to the project? Are these crews subcontracted? b. Describe your proposed construction crew structure including number of personnel, skill areas, and equipment. 2. *Traffic Control*. Discuss your approach to planning, layout, and maintenance of traffic control including pedestrian travel ways during construction. Are traffic control personnel subcontracted? Are they solely dedicated to traffic control duties for the project? Who handles traffic control permitting and scheduling? 3. *Construction Phasing*. Discuss your approach to handling multiple work phases on the same roadway or adjacent roadways. Describe your typical planned work sequence from mobilization through punchlist closeout of each work site. 4. *Erosion and sediment control*. Discuss your approach to planning, implementation, and maintenance of stormwater management	**5 – Exceptional** **4 – Very Good** **3 – Satisfactory** **2 – Marginal** **1 – Unacceptable** **Rating: ____**

during all phases of work. Are erosion control personnel responsible for other work areas? Are personnel certified and trained in storm water management best management practices? 5. *Coordination.* Discuss your approach to coordinating with utilities, stakeholders, neighborhood organizations (HOAs), businesses, schools, Special Improvement Metro Districts (SIMD), and other City Divisions (Parks & Rec, Traffic, Stormwater, etc.). Discuss your understanding of impacts to be encountered for this project and how you will coordinate and phase your construction to both facilitate and accommodate these project stakeholders. 6. *Schedule*. Discuss your approach to schedule management including baselining, updating, and reporting progress of the work. 7. *Quality Control*. Discuss your quality control plan, processes and approach to ensure that the City receives a quality product that meets all specifications. Specifically discuss approach to laying out and constructing pedestrian curb ramps that meet City specifications. 8. *Safety*. Discuss the contractor's approach and commitment to safety for both construction workers and the public traveling through the construction site. Consider the following questions. 1. Does the proposal include a complete plan to accomplish each requirement, including subcontracting (if applicable) and suppliers? 2. Does the proposal demonstrate that appropriate and qualified personnel and equipment will be provided to carry out the requirement? 3. Is the proper level of effort directed toward each requirement? Does the level of effort look unrealistically low or unreasonably high? 4. Does the proposal demonstrate a firm understanding of the requirements and goals of the Statement of Work, as well as industry standards and reasonable expectations for a company in the industry? 5. Does the proposal fully and completely address each requirement and goal of the Statement of Work? 6. Does the proposal provide solutions to indicate that requirements and goals will be met on schedule and realistically?	

7. Does it generally appear that the Offeror knows and thoroughly understands the business and requirement?	
COMMENTS:	
Total Project Approach Area (Insert number from Section 1 evaluation above):	
Area Evaluation Factor:	**30 Points**
Project Approach Area Evaluation Score: *(Rating / 5) x Evaluation Factor*	
2. KEY PERSONNEL (15 POINTS)	
In the Key Personnel Area, the Offeror should identify key personnel proposed and their specific roles and responsibilities on the project. Resumes must be provided for key personnel to include at a minimum Contract Manager, Project Managers, Superintendents, Traffic Control Supervisors, Specialty Foreman. Contractor may have differing titles from those listed but should be similar in responsibility. Resumes do not count toward the page limit. It is highly recommended that the Offeror provide sufficient content and detail to answer completely the following questions. 1. Provide up to three (3) citations of past experience for each Key Personnel that demonstrates their experience on City or similar projects. Include dates of each project, client/organization, responsibilities, and tasks per project. 2. Demonstrate Key Personnel familiarity with relevant City and state regulations and procedures in their areas of responsibility 3. Demonstrate key construction supervision personnel familiarity with layout and construction of pedestrian curb ramps to ADA/PROWAG specification. Consider the following questions.	**5 – Exceptional** **4 – Very Good** **3 – Satisfactory** **2 – Marginal** **1 – Unacceptable** **Rating: ____**

1. Does the Offeror provide complete resumes, including education, experience, background information, certifications, accomplishments, and other pertinent information? 2. Does the Offeror provide resumes for all key personnel? 3. Do the resumes demonstrate adequate professional, technical, and management levels to accomplish the work effectively and efficiently?	
COMMENTS:	
Total Key Personnel Area (Insert number from Section 2 evaluation above):	
Area Evaluation Factor:	**15 Points**
Key Personnel Area Evaluation Score: *(Rating / 5) x Evaluation Factor*	
3. RELEVANT EXPERIENCE (10 POINTS)	
In the Relevant Experience Area, the Offeror should provide at least three references or identify contracts demonstrating that it successfully provided services/products that are the same or similar to those required in the RFP. Explain how the key personnel were related to the projects cited as relevant experience. It is highly recommended that the Offeror provide sufficient content and detail to answer completely the following questions: 1. Does the proposal include at least three references or past performance citations? 2. Are the references or past performance citations relevant to the requirements of the Statement of Work of the RFP? 3. Do these projects include construction of ADA/PROWAG accessible curb ramps? 4. Does the Offeror explain how they were successful on the projects provided as past performance? 5. Does the Offeror apply the past performance to the City requirement in such a way as to demonstrate added value due to experience?	**5 – Exceptional** **4 – Very Good** **3 – Satisfactory** **2 – Marginal** **1 – Unacceptable** **Rating: ____**

COMMENTS:	
Total Relevant Experience Area (Insert number from Section 3 evaluation above):	
Area Evaluation Factor:	**10 Points**
Relevant Experience Area Evaluation Score: *(Rating / 5) x Evaluation Factor*	
4. PRICE/COST AREA (40 POINTS)	
In the Price/Cost Area, the Offeror should provide a detailed breakdown of the price for each year of performance. The price must be fully loaded/all-inclusive and include unit cost for material, labor, other direct costs (e.g. travel), indirect costs (i.e. overhead and general and administrative costs), and profit/fee. Offers must include sufficient detail to allow insight into the fairness and reasonableness of the price. If the contract type will be T&M, labor categories, labor rates, separated profit, and estimated material costs must be included in detail. In addition, although price may not be the most important factor, it is still very important to the City of Colorado Springs. The Offeror's pricing must be competitive as compared to the budget amount, market pricing in the industry, and the pricing of the other Offerors. Consider the following questions: 1. How does the price compare to the industry competition? 2. If low, is it unrealistically low? 3. If high, is there demonstrated added value for the additional cost? 4. Can you see how the price was built? If so, do the costs look appropriate for the task? 5. Does the Offeror leave applicable costs out of the calculations? For instance, some will say travel is not included and will be an extra cost. This should be considered when comparing to other Offerors. 6. Are there additional costs not addressed that the City would incur if the Offeror were awarded the contract? If so, include	**5 – Exceptional** **4 – Very Good** **3 – Satisfactory** **2 – Marginal** **1 – Unacceptable** **Rating: ____**

those costs when comparing to the budget amount and the competition.	
COMMENTS:	
Total Price/Cost Area (Insert number from Section 4 evaluation above):	
Area Evaluation Factor:	**40 Points**
Price/Cost Area Evaluation Score: *(Rating / 5) x Evaluation Factor*	
5. PROPOSAL PRESENTATION (5 POINTS)	
Presentation is an important factor. Offerors should provide a highly professional product, which is complete, accurate, easily understood, and effectively presented.	**5 – Exceptional** **4 – Very Good** **3 – Satisfactory** **2 – Marginal** **1 – Unacceptable** **Rating: _____**
COMMENTS:	
Total Proposal Presentation Area (Insert number from Section 5 evaluation above):	
Area Evaluation Factor:	**5 Points**
Proposal Presentation Area Evaluation Score: *(Rating / 5) x Evaluation Factor*	

6. EXCEPTIONS PROPOSED	
What (if any) exceptions (redlines to our terms and conditions) were proposed? Are they acceptable? **COMMENTS:**	**Pass/Fail**
7. INSURANCE EXCEPTIONS PROPOSED	
What (if any) exceptions (redlines to our terms and conditions) were proposed? Are they acceptable? **COMMENTS:**	**Pass/Fail**
TOTAL SCORE – Add Evaluation Scores from Sections 1-5. The sum is the total score.	Total Score:

EXHIBIT 8 – STORMWATER CONSTRUCTION MANUAL

Document included as separate attachment to the RFP. Source document can be found at the following website:

https://coloradosprings.gov/stormwater-enterprise/page/drainage-criteria-manual?mlid=6291

EXHIBIT 9 – CONTRACTOR SAFETY PROGRAM

Document included as separate attachment to the RFP. Source document can be found at the following website:

https://coloradosprings.gov/sites/default/files/contractor_safety_program_policy.pdf

SECTION VI – SCHEDULES

SCHEDULE A – PROPOSAL PRICE SHEET

SCHEDULE B – GENERAL CONSTRUCTION TERMS AND CONDITIONS

SCHEDULE C – SPECIAL CONSTRUCTION TERMS AND CONDITIONS

SCHEDULE D – STANDARD SPECIFICATIONS

SCHEDULE E – MEASUREMENT AND PAYMENT

SCHEDULE F – SCOPE OF WORK

SCHEDULE A – PRICE SHEET (TO BE COMPLETED ON BIDNET)

COLORADO SPRINGS

SCHEDULE B

General Construction Terms and Conditions

TABLE OF CONTENTS

SECTION 100 – DEFINITIONS AND TERMS B-5
SECTION 101 – CONTRACT DOCUMENT INTERPRETATION B-7
101.00 INTENT OF CONTRACT DOCUMENTS B-7
101.01 SPECIAL PROVISIONS, SPECIAL SPECIFICATIONS B-7
101.02 STANDARD MANUFACTURER B-7
101.03 "OR EQUAL" CLAUSE B-8
SECTION 102 – COMPLIANCE WITH LAWS B-9
102.00 PUBLIC IMPROVEMENT ASSESSMENT B-9
102.01 ALL LEGAL PROVISIONS INCLUDED B-9
102.02 LICENSES AND PERMITS B-9
SECTION 103 – AWARD AND EXECUTION OF CONTRACT B-10
103.00 CONTRACT EXECUTED B-10
103.01 VERBAL AGREEMENTS B-10
103.02 CONTRACT SECURITY B-10
103.03 INDEPENDENT CONTRACTOR B-11
SECTION 104 – THE CONTRACT: FOLLOWING EXECUTION B-12
104.00 MATERIALS B-12
104.01 SCHEDULE B-12
104.02 SCHEDULE OF VALUES B-17
104.03 SURVEYS B-18
104.04 SUBCONTRACTS B-18
104.05 OTHER CONTRACTS B-19
SECTION 105 – CONSTRUCTION SITE B-20
105.00 LANDS TO BE USED FOR WORK B-20
105.01 STORAGE OF MATERIALS B-20
105.02 LOADING OF STRUCTURES B-20
105.03 SANITARY PROVISIONS B-20
105.04 ACCIDENT PREVENTION B-21
105.05 PROTECTION OF THE PUBLIC WORKS AND PROPERTY B-22
105.06 PUBLIC ROADS B-22
105.07 PROTECTION OF EXISTING CURBS, GUTTERS AND DRIVEWAYS B-23
105.08 PROTECTING AND REMOVING PLANTINGS B-23

105.09 PUBLIC CONVENIENCE AND SAFETY B-23
105.10 FAILURE TO MAINTAIN SAFE SITE B-24
105.11 EROSION AND DRAINAGE CONTROL B-24
105.12 POLLUTION B-25
105.13 TEMPORARY CONSTRUCTION B-25
105.14 TEMPORARY WATER SUPPLY B-25
105.15 TEMPORARY ELECTRICITY B-26
105.16 TEMPORARY HEAT B-26
105.17 TEMPORARY ENCLOSURES B-26
105.18 CLEAN-UP B-26
SECTION 106 – ROYALTIES, PATENTS, SPECIAL LICENSES AND PERMITS B-27
106.00 ROYALTIES AND PATENTS B-27
SECTION 107 – WORK PROVISIONS AND RULES B-28
107.00 COMMENCEMENT AND COMPLETION OF WORK B-28
107.01 FAILURE TO COMPLETE WORK ON TIME, LIQUIDATED DAMAGES B-28
107.02 WORK IN BAD WEATHER B-29
107.03 EXCUSABLE DELAYS B-29
107.04 COMPENSATION FOR COMPENSABLE DELAYS B-30
107.05 EMERGENCY WORK B-31
107.06 VALUE ENGINEERING CHANGE PROPOSALS B-31
107.07 AUTHORITY OF THE PROJECT MANAGER B-35
107.08 DUTIES OF THE INSPECTOR B-35
107.09 CONSTRUCTION OBSERVATION AND INSPECTION B-36
107.10 CONTRACTOR COOPERATION B-37
107.11 CONTRACTOR'S RESPONSIBILITY FOR WORK B-37
107.12 PROTECTION OF UTILITIES B-37
107.13 FEDERAL FUNDS B-41
107.14 SUPERINTENDENCE B-43
107.15 PREPARATION B-43
107.16 STAKING WORK B-43
107.17 DEVIATION ALLOWED B-44
107.18 RIGHT-OF-WAY B-44
107.19 SHOP DRAWINGS AND SUBMITTALS B-44
107.20 RECORD DRAWINGS B-45

107.21 MATERIALS B-45
107.22 MATERIAL INSPECTION AT PLANT B-46
107.23 HANDLING MATERIALS B-46
107.24 CITY FURNISHED MATERIALS B-46
107.25 BUY AMERICA REQUIREMENTS B-47
107.26 TESTING OF MATERIALS B-47
107.27 UNANTICIPATED CIRCUMSTANCES B-49
107.28 DISPUTE RESOLUTION B-53
107.29 REMOVAL AND SUSPENSION FOR DEFECTIVE WORK B-54
107.30 CLEANING UP AND FINAL INSPECTION B-55
107.31 CUTTING AND PATCHING B-55
107.32 FINAL TESTS B-56
107.33 CORRECTION OF WORK AFTER FINAL PAYMENT B-56
107.34 NO WAIVER OF LEGAL RIGHTS B-56
107.35 ACCEPTANCE B-57
SECTION 108 – PAYMENTS AND ACCEPTANCE OF WORK B-59
108.00 PAYMENTS AND RETAINAGE B-59
108.01 PAYMENTS WITHHELD PRIOR TO FINAL ACCEPTANCE B-60
108.02 ACCEPTANCE OF FINAL PAYMENT B-61

SECTION 100 – DEFINITIONS AND TERMS

Titles used in these specifications having a masculine gender, such as “workmen” and the pronouns “he” or “his”, are for the sake of brevity and are intended to refer to persons of any gender.

The titles or headings of the sections and subsections herein are intended for convenience of reference and shall not have any bearing on their interpretation.

When the Contract indicates that something “shall” be done, the action is required and is not discretionary.

Calendar Day	Each and every day shown on the calendar, beginning and ending at midnight.
Change Order	A written order issued to the Contractor by the City covering contingencies, extra work, increases or decreases in Contract quantities, and additions or alterations to the plans or specifications, within the scope of the Contract, and establishing the basis of payment and time adjustments for the work affected by the changes. The Change Order is the only method authorized for changing the Contract.
City	The City of Colorado Springs, Colorado.
Contract Documents	Contract Documents include the Request for Proposal, Instructions to Offerors, Proposal, Amendments, the signed Contract, surety bonds, insurance documents, all terms, conditions, and provisions, and the Specifications, including all modifications thereof incorporated in any of the documents before execution of the agreement.
Contract	The executed written agreement between the City and the Contractor setting forth the obligations of the parties for the performance of the work and the basis of payment. The Contract includes the Contract Documents, Notice to Proceed, and executed Change Orders, all of which constitute one instrument.
Contractor	The person, persons, firm, or corporation to whom a Contract is awarded by the City and who is subject to the terms of said Contract. Contractor shall include the agents, employees, workmen, subcontractors and any assignees of said Contract.
Engineer	An engineer of the City of Colorado Springs.

Notice	Any written notice served pursuant to the terms of the Contract. Notice shall be deemed to have been duly served if delivered in person or by registered mail to: The Project Manager assigned to the Contract, City of Colorado Springs, City Engineering, 30 South Nevada Ave., Room 403, Colorado Springs, CO 80903. Notice to the Contractor will be to the Authorized Representative of the Contractor at the site of the Project in person; or by registered mail to the Contractor's principal place of business as indicated in the Contractor's proposal certifications; or as to the Surety on the performance bond by registered mail to the Surety at the home office of such surety.
Plans	The drawings, or reproductions, provided by the City that show the location, character, dimensions, and details of the work to be done.
Project Manager	An individual representing the City responsible for managing and oversight of the Contract. .
Project	The entire improvement outlined in the Scope of Services which is to be constructed in whole or in part pursuant to the Contract.
Subcontractor	A person, firm, or corporation, other than the Contractor, supplying labor or materials, or both, or equipment furnished at the site of the project under an Agreement with the Contractor.
Surety	The person, firm, or corporation that has executed as surety the Contractor's Proposal, Performance, Payment and Maintenance Bonds.
Work	Work performed under the Contract.
Working Days	Days of the week, not including weekends and City holidays, unless otherwise stated.

SECTION 101 – CONTRACT DOCUMENT INTERPRETATION

101.00 INTENT OF CONTRACT DOCUMENTS

The sections of the Contract Documents are complementary, and what is called for by any one shall be as binding as if called for by all. The intent of the Contract Documents is to include the cost of all labor and materials, water, fuel, tools, plants, equipment, light, transportation, and all other expenses as may be necessary for the proper execution of the work. If the Contract Documents should be contradictory in any part, the order of precedence shall be as described in the Contract.

Any work shown on the Plans and not covered in the specifications, or included in the Specifications and not shown on the Plans, shall be executed by the Contractor as though shown both on the Plans and included in the Specifications.

If the Contractor, in the course of the work, finds any discrepancy between the Plans and the physical layout, or any errors or omissions in Plans or layout, he shall immediately so inform the Project Manager and the Project Manager will promptly verify them. Any work done after such discovery without written consent of the Project Manager authorizing the same shall be done at the Contractor's risk and sole expense.

Any incidental and/or appurtenant items not specifically called for in the Plans and Specifications, but which are necessary to complete the work in accordance with the requirements of good practice, as determined by the Project Manager, shall be included as a part of the Contractor’s proposal price and furnished at no additional cost to the City.

In interpreting the Contract Documents, words describing materials or work which have a well-known technical or trade meaning, unless otherwise specifically defined in the Contract documents, shall be constructed in accordance with such well known meaning recognized by architects, engineers, and the trade.

101.01 SPECIAL PROVISIONS, SPECIAL SPECIFICATIONS

Special Provisions or Special Specifications may be written to expand upon, modify or cancel these general provisions or the standard specifications.

101.02 STANDARD MANUFACTURER

Wherever the terms "standard", "recognized" or "reputable" manufacturers are used, they shall be construed as meaning manufacturers who have been engaged in the business of fabricating materials, equipment, or supplies of the nature called for by the Specifications for a reasonable period of time prior to the date set for submission of proposals, and who can demonstrate to the satisfaction of the City that said manufacturer has successfully installed equipment, materials, or supplies of the type proposed to be furnished in at least three instances and that the performance of such materials,

equipment, or supplies for a period of over twelve months prior to the date fixed for submission of proposals shall, prima facie, be deemed to have been engaged in such business for a reasonable length of time.

101.03 "OR EQUAL" CLAUSE

Whenever in any section of the Contract documents, any article, material, or equipment is defined by describing a proprietary product, or by using the name of manufacturer or vendor, the term "or equal" if not inserted, shall not be construed in such a manner as to exclude manufacturers' products of comparable quality, design, and efficiency, subject to review and approval by the Project Manager. The Project Manager may require that proposed equals be submitted for review and approval.

SECTION 102 – COMPLIANCE WITH LAWS

102.00 PUBLIC IMPROVEMENT ASSESSMENT

If the cost of the improvement to be constructed under the Contract is to be assessed upon the owners of land benefited by such improvement, upon complaint of any such landowner that the improvement is not being constructed in accordance with the Contract, the City Council may consider the complaint and make such order in the premises as shall be just to ensure compliance with the Contract.

102.01 ALL LEGAL PROVISIONS INCLUDED

It is the intention and agreement of the parties to this Contract that all legal provisions of law required to be inserted, shall be and are inserted. However, if by mistake or otherwise, some such provision is not inserted, or is not inserted in proper form, then upon application of either party, the Contract shall be amended so as to strictly comply with the law and without prejudice to the rights of either party.

102.02 LICENSES AND PERMITS

It shall be the responsibility of the Contractor to obtain, at its expense, all necessary licenses and permits to do the Project, in accordance with applicable Federal, State and local laws, regulations and ordinances. Typical permits and fees include, but are not limited to, Excavation/Boring Permits, Concrete Construction Permits, Fugitive Dust Permits, Regional Building Permits, Pavement Degradation fees, as well as Traffic Control and Barricade Plans to be approved by the City Traffic Division for all work within public rights-of-way and easements i.e. (curb and gutter, sidewalks, pedestrian ramps and cross pans).

SECTION 103 – AWARD AND EXECUTION OF CONTRACT

103.00 CONTRACT EXECUTED

A single original Contract to include the Contractor's Performance, Labor and Material Payment and Maintenance Bonds may be executed and maintained in the official Contract file located in the City Contracts office. The original copy of the Contract maintained in the City Procurement Services file shall take precedence for purposes of interpretation or determining what the Contract says. After all required signatures are obtained; photocopy counterparts (copies) will be made and distributed to the following, as applicable:

(a) Contractor
(b) Project Manager
(c) City Finance Department
(d) Inspector

Each Bond shall have an original Power of Attorney attached. The Contractor shall provide compensation insurance and public liability and property damage insurance as outlined in the Contract. The costs of executing the bonds, Contract, and insurance, including all notaries' fees and expense, are to be paid by the Contractor to whom the Contract is awarded. Bonds shall be furnished on forms prepared by the City. Copies of the City's Bond Forms are included in the Exhibits Section of the Request for Proposal, if applicable.

103.01 VERBAL AGREEMENTS

No verbal agreements or conversations with any agent or employee of the City either before or after execution of the Contract shall affect or modify any of the terms or obligations contained in any of the documents comprising the Contract.

103.02 CONTRACT SECURITY

The Contractor shall furnish good and sufficient Performance, Labor and Material Payment and Maintenance Bonds on the form attached hereto in an amount not less than the full amount of the Contract price as security for the faithful performance of the Contract, for the payment of all persons performing labor and furnishing material in connection with the work, and for all guarantees of materials and workmanship required in the Contract. If at any time during the continuance of the Contract a surety on the Contractor's bond or bonds becomes irresponsible, as determined in the City's sole and absolute discretion, the City shall have the right to require additional and sufficient sureties which the Contractor shall furnish within ten (10) days after written notice to do so. Any additional surety bonds shall cover the entire original Contract amount and any increases thereto.

103.03 INDEPENDENT CONTRACTOR

In the performance of the Contractor's obligations under this Contract, it is understood, acknowledged and agreed between the parties that the Contractor is at all times acting and performing as an Independent Contractor, and the City shall neither have nor exercise any control or direction over the manner and means by which the Contractor performs the Contractor's obligations under this Contract, except as otherwise stated within the Contract terms. The City shall not provide any direction to the Contractor on the work necessary to complete the Project. Contractor understands that it is an independent contractor responsible for knowing how to perform all work or tasks necessary to complete Project. The Contractor understands and agrees that the Contractor and the Contractor's employees, agents, servants, or other personnel are not City employees. The Contractor shall be solely responsible for payment of salaries, wages, payroll taxes, unemployment benefits or any other form of compensation or benefit to the Contractor or any of the Contractor's employees, agents, servants or other personnel performing services or work under this Contract, whether it be of a direct or indirect nature. Further in that regard, it is expressly understood and agreed that for such purposes neither the Contractor nor the Contractor's employees, agents, servants or other personnel shall be entitled to any City payroll, insurance, unemployment, worker's compensation, retirement or any other benefits whatsoever.

SECTION 104 – THE CONTRACT: FOLLOWING EXECUTION

104.00 MATERIALS

Unless otherwise stipulated in the Contract, the Contractor shall provide and pay for all materials, labor, water, tools, equipment, light power, transportation, and other facilities necessary for the execution and completion of the work. The Contractor shall, if required, furnish satisfactory evidence as to the kind and quality of materials.

104.01 SCHEDULE

In the event of contradictions or inconsistencies, this clause shall take precedence over any language relevant to scheduling included anywhere else in this Contract.

The Contractor shall be responsible for planning, scheduling, and reporting the progress of the work to ensure timely completion of the work as called for in the Contract Documents. The Contractor shall prepare a detailed Project schedule ("Project Schedule") that shall be used for coordination, for evaluation of progress, and for the evaluation of changes to the Contract. The Project Schedule shall include all activities, including those of subcontractors, Contractor's engineers and surveyors, and suppliers. Seasonal and weather constraints, utility coordination, railroad restrictions, right of way restrictions, traffic constraints, environmental constraints, other project interfaces, expected job learning curves and other constraints shall be considered when preparing the Project Schedule, including any phasing or sequencing of the work specified in the Contract Documents. Days scheduled as no work days shall be indicated. The Project Schedule shall consist of a Methods Statement as defined in subsection (a) below and a progress schedule consisting of (1) a Critical Path Method ("CPM") schedule as defined in subsection (b) below, or (2) a Bar Chart schedule as defined in subsection (c) below. A CPM Schedule shall be required if the Contract exceeds $250,000 or if the construction period exceeds 150 Calendar Days, unless the Contract Documents stipulate otherwise. The CPM Schedule shall utilize Primavera's Suretrak Project Manager software (or other software designated by the Project Manager), or be capable of being read and manipulated by Suretrak Project Manager software (or other software designated by the Project Manager). The Project Schedule shall show all work completed within the Contract Period of Performance. The City reserves the right to approve or disapprove any proposed schedule. If disapproved, the Contractor must make requested changes and resubmit the schedule for approval within five working days of the disapproval by the City.

After award, the Contractor shall submit two copies of all required schedule information as described below. Schedules, schedule updates, diagrams and reports using CPM shall also be submitted electronically in the appropriate software format. All schedules, diagrams, and reports shall include a title, project number, date of preparation, and the name of the Contractor.

The Bar Chart or CPM 90-day schedule shall be submitted at least 14 Calendar Days prior to the start of the work. The Project Manager's review will not exceed five working days. Work shall not begin until the Project Schedule is accepted in writing, unless otherwise approved by the Project Manager.

(a) Methods Statement. A Methods Statement shall be prepared for the prominent features listed in the Contract Documents, and for any feature not listed in the Contract Documents that the Contractor considers a controlling factor for timely completion. The Methods Statement shall be a detailed narrative describing each feature and all work necessary to complete the feature. The Methods Statement shall be submitted with the Contractor's schedule. The following format is required:

1. Feature: Name of the feature;

2. Responsibility: Contractor, subcontractor, supplier, utility, etc. responsible for the feature;

3. Procedures: Procedures to be used to complete the work. The procedure to be used shall include general information regarding methods such as forming, excavation, pouring, heating and curing, backfill and embankment, trenching, protecting the work, etc. When separate or different procedures are to be employed by the Contractor due to seasonal or Project phasing requirements, such differing procedures shall be described in the procedure statement;

4. Production Rates: The planned quantity of work per day for each feature;

5. Labor Force: The labor force planned to do the work;

6. Equipment: The number, types, and capacities of equipment planned to do the work;

7. Work Times: The planned time for the work to include:
(a) number of work days per week
(b) number of shifts per day
(c) number of hours per shift

At the Project Manager's request, the Contractor shall update the Methods Statement, or any part thereof, and submit it with the Job Progress Narrative Report or Schedule Update, whichever is earlier.

(b) Critical Path Method. CPM is a scheduling method which shows the interdependencies between work activities. The critical path is that path through the schedule which, if delayed, will cause a delay to project completion.

The progress schedule shall include as a minimum the prominent features of this Project as listed in the Contract Documents. The progress schedule shall include all activities for all work on the Project, including subcontracted work, delivery dates for critical material, submittal and review periods, milestone requirements and no work periods. Where the Project has specific phases, each phase shall be described separately for each applicable prominent feature.

Construction activity duration shall not exceed 15 Calendar Days unless approved by the Project Manager. Series of activities that have aggregate durations of five Calendar Days or less may be grouped in a single activity. For example, "form, reinforce, and pour pier" could be defined as a single activity rather than three. Single activities or a series of grouped activities of at least one Calendar Day duration may also need to be included in the Project Schedule as determined by the Project Manager (e.g. same activities but noted separately by location).

Time Scaled Logic Diagram: This diagram shall show the logical progression of all activities required to complete the work defined in the Contract Documents. Activity information shall include activity ID, description, duration, early start and finish dates, late start and finish dates, total float, and responsibility.

1. 90-Day Schedule. The 90-Day Schedule shall provide all necessary detail for procurement, construction and submittal activities required during the first 90 days of the Period of Performance. This submittal shall include a Time Scaled Logic Diagram.

2. Project Schedule, as described above.

The Project Schedule shall cover the entire Period of Performance.

3. Schedule Updates. The Contractor shall update the 90-Day Schedule or the Project Schedule to reflect actual construction progress of all work activities on the project. Updates shall show the previous 30 days progress and a 60-day projection for all work started, completed, or in progress during this three month window.

The Project Schedule shall be updated as of the cutoff date for the monthly progress pay estimate and submitted to the Project Manager before the payment of the progress pay estimate is approved.

Each of the diagrams, charts, and reports shall comply with the requirements for the Project Schedule above, except that they shall also include the actual completion dates and percentages of completion for the appropriate activities.

(c) Bar Chart. The Bar Chart shall be time scaled and shall show the following:

1. The prominent features, as listed in the Contract Documents.

2. Any feature not listed in the Contract Documents that the Contractor considers a controlling factor for timely completion.

3. The number of days required to complete each feature and its relationship in time to other features.

4. Sufficient space for each feature to permit two additional plots parallel to the original time span plot.

5. The anticipated delivery dates for equipment or materials in any feature that could affect timely completion of the project.

6. Critical completion dates for any activity within any feature that could affect timely completion of the project.

7. Connecting lines between features that show the intended progression of activities.

The Project Schedule shall cover the time from the Day of Notice to Proceed to the predicted completion date. The Project Schedule shall be updated as of the cutoff date for the monthly progress pay estimate and submitted to the Project Manager before the payment of the progress pay estimate is approved. The Contractor shall provide a copy of the original bar chart showing, for each feature, the days actually worked and the anticipated days required to complete.

(d) Project Coordination. The Contractor shall coordinate and schedule its work to include anticipated utility work. Various City and private utility entities may be working to install and/or inspect their utilities within the Project area. Reasonable delays should be expected for utility lowering, relocations and placement. These delays shall not be reason for granting any monetary change or performance time alteration to the Contract. As a minimum, the Contractor's Project Schedule shall reflect coordination with the following:

1. City of Colorado Springs City Engineering Division

2. City of Colorado Springs Traffic Engineering Division

3. Colorado Springs Utilities (water, wastewater, gas, electric)

4. City of Colorado Springs Parks, Recreation and Cultural Services Department

5. Private Utility and Telecommunication Companies

(e) Contractor Early Finish or Voluntary Acceleration. Early finish or voluntary acceleration of the schedule by the Contractor is acceptable provided:

1. At the time the Contractor submits the Project Schedule indicating an early finish or voluntary acceleration, the City is notified in writing of actions on the City's part necessary to accommodate the change(s).

2. The City agrees to such change(s) in writing.

3. The City is compensated by the Contractor for any inconvenience or expense associated with the change(s).

4. There is no increase to Contract cost.

A Job Progress Narrative Report shall be submitted bi-weekly as a minimum and with all Project Schedule updates. It shall detail the description of job progress, problem areas, current and anticipated delaying factors and their anticipated effects, impacts to job milestones or Project completion, any corrective action proposed or taken, and any minor revisions to the Project Schedule. If the Job Progress Narrative Report indicates problem areas and impacts to job milestones or Project completion, a revised Project Schedule shall also be submitted as specified below.

Revision of the Project Schedule may be required, as determined by the Project Manager, for: a major revision in the schedule logic or methods of construction; the addition, deletion, or revision of activities required by Contract modification; delays in milestones or the completion of the Project; or for prosecution of work that revises the phasing or staging which is represented on the plans or on the progress schedule. If in the opinion of the Project Manager, the Contractor falls behind the approved Project Schedule, the Contractor shall take steps necessary to improve Project progress, including those steps that may be required by the Project Manager, without additional costs to the City. In those circumstances where the Contractor is behind schedule, the City may require the Contractor to increase the number of shifts, overtime operations, days of work, and/or the amount of construction planned and to submit such changes and revisions to the Project Schedule to the Project Manager for approval that will demonstrate how the approved rate of required progress will be regained. Failure of the Contractor to comply with the requirements of the Project Manager under this subsection shall be grounds for a determination by the City that the Contractor is not prosecuting the work with sufficient diligence to ensure timely completion of the Contract as required.

If it is determined that a revision to the Project Schedule is required, it shall be provided to the Project Manager for review within 15 Calendar Days of Contractor receiving written notification of the requirement from the Project Manager. The Project Manager's review of the revised schedule will not exceed 5 working days. Revisions required as a result of the Project Manager's review shall be submitted within 5 working days. When accepted by the Project Manager in writing, the revised schedule shall become the Project Schedule.

The Contractor shall participate in the Project Manager's review and evaluation of the submittals. Meetings will be held to review progress and planning when requested by the Project Manager or Contractor. The Project Manager may request additional project scheduling information and documentation as deemed necessary, including reports and other information that may be reasonably generated using CPM software if required by the Contract.

The Contractor shall prosecute the work according to the Project Schedule. The Contractor shall be responsible for assuring that its subcontractors, suppliers, and engineers/surveyors, at any tier, also prosecute the work according to the Project Schedule. The City shall be entitled to rely on the Project Schedule for planning and coordination.

Acceptance of the Contractor's Project Schedule by the Project Manager is not to be construed as relieving the Contractor of obligation to complete the Contract work within the Contract time allowed for the portion of the work or the entire Contract, or granting, rejecting or in any other way acting on the Contractor's request for extension of Contract time, or claims for additional compensation.

All costs relating to preparation, submittal, and acceptance of the Project Schedule, reports and revisions, and all requirements of this subsection will not be paid for separately, but shall be included in the work.

Failure of the Contractor to comply with the requirements of this subsection may be grounds for a determination by the Project Manager that no further progress payments are to be made until the Contractor is in full compliance.

104.02 SCHEDULE OF VALUES

Promptly following the execution of the Contract Documents for all Firm Fixed Price, lump sum Contracts, the Contractor shall prepare and transmit to the Project Manager two copies of an itemized Project cost breakdown showing the unit quantities of each major construction item and the corresponding unit prices. Such unit prices shall contain all costs including profit and overhead of each item complete in place. The total cost of all the items shall equal the Contract price for the Project. This breakdown, once approved by the Project Manager, will be used primarily in determining payment due the Contractor as provided herein. If, in the opinion of the Project Manager, any unit price submitted by the Contractor is unbalanced, a detailed breakdown of the items contained in the unit will be required.

For Contracts executed on a fixed unit price basis, payment shall be made based on the actual number of units installed or performed that are complete, however, payment shall not exceed the total Contract amount unless previously approved by Change Order.

104.03 SURVEYS

Unless otherwise specified in the Contract Documents, the City will furnish all site surveys, easements, pipeline licenses, etc., necessary to authorize construction of any permanent works required in the Contract, where such work is to be done on property other than the City's.

The Project limits of construction shall be within the public right-of-way and/or City easements. The Contractor shall not trespass on premises outside of the limits of construction for this Project, unless permission to do so is granted by the property owner in writing. Copies of any such grant shall be furnished to the City prior to the performance of any work outside the limits of construction.

104.04 SUBCONTRACTS

The Contractor will be permitted to subcontract a portion of the Contract; however, the Contractor shall perform work amounting to 30 percent or more of the original total cost of proposal items. Any items designated in the Contract as “specialty items” may be performed by subcontractor. The cost of “specialty items” so performed by subcontractor may be deducted from the original total cost of proposal items before computing the amount of work required to be performed by the Contractor.

The calculation of the percentage of subcontracted work shall be based on the Contract unit prices rather than subcontract unit prices. Proportional value for a subcontracted partial Contract item will be verified by the Project Manager. For the purpose of calculating the value of subcontracted work, the cost of procuring materials and manufactured products can be included in either the Contract or subcontract. However, when a firm both sells material to a Contractor and performs the work of incorporating the materials into the Project, these two phases shall be considered in combination and as constituting a single subcontract.

The Contractor shall as soon as practical after signing the Contract notify the Project Manager in writing, giving the names and qualifications, of all subcontractors proposed to do work on the Project within fifteen (15) business days of notice of award. The City shall have the right to reject subcontractors who are debarred or suspended from doing business with the federal government, State government, or the City of Colorado Springs. The Contractor shall notify the Project Manager of each subcontract he awards, giving:

(a) Name, address, and telephone number of the subcontractor

(b) Branch of work covered

(c) Total price of subcontract

(d) Date of subcontract

It shall be the responsibility of the Contractor to file with the Project Manager copies of applicable permits and licenses required to do the subcontracted work. Subcontracts or transfer of Contract obligations shall not release the Contractor of liability under the Contract and bonds.

104.05 OTHER CONTRACTS

The City may undertake or award other Contracts for additional work at or near the site of the work under this Contract. The Contractor shall fully cooperate with the other Contractors and with City employees and shall carefully adapt their scheduling and performance of the work to accommodate the additional work, heeding any direction that may be directed by the Project Manager. The Contractor shall not commit or permit any act, which will interfere with the performance of work by any other contractor.

SECTION 105 – CONSTRUCTION SITE

105.00 LANDS TO BE USED FOR WORK

The Contractor shall confine the work activities to the area shown in the construction drawings. The Project Manager will furnish the Contractor with copies of all executed right of way (ROW) and easement documents for the Project. The established work zone shall be marked and secured with orange safety fence. Any additional work area required within adjoining private properties must be acquired by the Contractor by written permission from the property owner. The Contractor shall restore any damage or disruption to other properties utilized in the performance of this Project to an equal or better than pre-construction condition at no cost to the City. The Contractor shall indemnify and hold the City harmless from any claims or losses from damage or disruption of private property.

Contractor shall provide, at its expense and without liability to the City, any additional land and access thereto that may be required for temporary construction facilities or for storage of materials. All such costs will be considered incidental to the work and will not result in additional cost to the City. Contractor personnel shall not unnecessarily enter upon private property without the express written consent of the landowner. The Contractor shall provide the Project Manager with a copy of the written permission. The Contractor shall indemnify and hold the City harmless from any claims or losses related to Contractor trespassing.

105.01 STORAGE OF MATERIALS

The Contractor shall confine its equipment, apparatus, the storage of materials and operations of Contractor's workmen to limits indicated by law, ordinances, permits, or directions of the City and shall not encumber the Project site with materials or equipment not necessary for the Project.

105.02 LOADING OF STRUCTURES

The Contractor shall not load or permit any part of a structure to be loaded with a weight that will endanger the structure's safety. The Contractor shall enforce the Project Manager's instructions regarding signs, advertisements, fires, and smoke.

105.03 SANITARY PROVISIONS

The Contractor shall provide and maintain on the construction site at all times suitable sanitary facilities for use of those employed on this Contract without committing any public nuisance. All toilet facilities shall be subject to the approval of the El Paso County Public Health Department. All portable toilet facilities for this Project shall be kept on City or State right-of-way as directed by the Project Manager.

105.04 ACCIDENT PREVENTION

The Contractor shall be solely responsible for initiating, maintaining, and supervising all safety precautions and programs in connection with the Work. The Contractor shall submit to the City an acceptable, comprehensive Safety Plan for review prior to commencement of the Work. The Contractor shall take all necessary precautions for the safety of, and shall provide the necessary protection to prevent damage, injury, or loss to:

a.) All persons on or about the Site or who may be affected by the Work;

b.) All Work and materials and equipment to be incorporated therein, whether in storage on or off the Site; and

c.) Other property at the site or adjacent thereto, including buildings, real property, trees, shrubs, lawns, walks, pavements, roadways, structures, utilities, and underground facilities not designated for removal, relocation, or replacement in the course of the Work.

Notwithstanding the foregoing, the City reserves the right to direct the Contractor to stop work and correct an unsafe condition at any time that any person present at the job site identifies any unsafe condition or action. For this purpose only, any person at the job site is authorized to act on behalf of the City, but such intermittent delay shall not be grounds for an increase in the Contract price or schedule.

Precaution shall be exercised at all times for the protection of persons, including employees, and property. The safety provisions of all Federal, State and Municipal laws and any other codes relating to the public safety, shall be strictly observed, and the Contractor shall, at all times, whether or not so specifically directed by the Project Manager, take the necessary precautions to ensure the protection of the public.

Piling, sheeting and shoring shall be utilized where required to prevent any excessive widening or sloughing of a trench which may be detrimental to human safety, traffic flow, a pipe being placed, trees, or to any existing structure.

Excavated materials shall be placed a safe distance from the sides of the trench. Heavy equipment shall not be used or placed near the sides of a trench unless the trench is adequately braced.

The Contractor shall not load or permit any part of a structure to be loaded with a weight that will endanger the structure's safety.

The Contractor shall designate a qualified and experienced safety representative at the Work site(s) whose duties and responsibilities shall be the prevention of accidents and the maintaining and supervising of safety plans and programs.

105.05 PROTECTION OF THE PUBLIC WORKS AND PROPERTY

The Contractor shall provide and maintain all necessary watchmen, barricades, lights, and warning signs and take all necessary precautions for the protection of the public. The Contractor shall continuously maintain adequate protection of all work from damage, and shall take all reasonable precautions to protect the City's property from injury or loss arising in connection with the Contract. The Contractor shall make good any damage, injury, or loss to their work and to the property of the City resulting from lack of reasonable protective precautions except such as may be due to errors in the Contract Documents, or caused by agents or employees of the City. The Contractor shall check all cautionary signs at least once a day during this Contract.

The Contractor shall continuously maintain adequate protection of all their work from damage and shall protect the City's and adjacent property from injury arising in connection with this Contract.

The Contractor will be responsible for any and all damage to property, public or private, that may be caused by its operations in the performance of this Contract, and the Contractor shall defend any suit that may be brought against itself or the City on account of damage inflicted by its operations, and shall pay any judgments awarded to cover such damage and shall indemnify the City for any losses arising out of such damage or related claims.

The Contractor shall be responsible for the restoration of all existing surface or subsurface improvements damaged as a result of construction at no additional cost to the City.

105.06 PUBLIC ROADS

The Contractor in executing the work on this Project shall not unnecessarily impede or interfere with traffic on public highways or streets. Detours, including surfacing, guard rails, temporary bridges and culverts, as may be shown on the drawings, or ordered by the Project Manager to accommodate the general public, residents adjacent to the improvements, and the United States mail shall be provided and maintained by the Contractor in a good workmanlike manner. Any call out of City Barricade Crews shall be charged to and paid for by the Contractor.

All work done within the public right-of-way and/or easements requires n Traffic Control Plan approved by the City Traffic Engineering Division.

The Contractor shall provide and maintain in place all barricades, warning signs, lights and other safety devices required to protect the work, divert traffic, and warn pedestrians of open excavation, unfilled trenches, and other areas or conditions which might be hazardous or dangerous. Detour routings must first be submitted to the City Traffic Engineer for review and approval and shall be signed for the entire route of the detour as required to return the traffic to their street or origination. Detours shall be maintained

throughout the period of construction in such a manner as to provide the least amount of disruption to normal traffic flow.

All signing and barricading shall conform to the latest editions of the following:

(a) Manual of Uniform Traffic Control Devices for Street and Highways (MUTCD)

(b) City of Colorado Springs Traffic Signage and Markings Manual

(c) City of Colorado Springs Construction Traffic Control Manual

The City Traffic Engineer may require flag persons or off-duty police officers for traffic direction.

105.07 PROTECTION OF EXISTING CURBS, GUTTERS AND DRIVEWAYS

The Contractor shall exercise care in protecting existing curbs, gutters and driveways. Curbs, gutters and driveways damaged by the Contractor's operations shall be removed and replaced by the Contractor at Contractor's expense.

105.08 PROTECTING AND REMOVING PLANTINGS

The Contractor shall protect all existing trees, shrubs and other plantings from above ground and root structure damage during the construction activities. Plantings which are considered to be slightly damaged shall be properly pruned and sealed according to accepted nursery practices. Contractor shall be liable for the costs of any unnecessary damage to plants or trees as determined by the Project Manager. Where plantings are in conflict with new work, as determined by the City Forester (plantings in the public right-of-way) or by the inspector or owner (plantings on private property), the Contractor shall at his expense remove the planting. The Contractor shall coordinate with the City Forester prior to working in the vicinity of plantings in the public right of way.

In all cases, the proper planting season shall be observed to assure proper establishment and growth of the plantings.

Tree branches shall be trimmed back to the trunk, all around, to a minimum height of 8’ above the adjacent walkway. Work shall be done only by a licensed Tree Service as provided in City Code Chapter 2, Article 3, Part 3.

105.09 PUBLIC CONVENIENCE AND SAFETY

The Contractor shall make every effort to minimize the inconvenience to property owners and to the traveling and pedestrian public, and shall conduct the Work to minimize obstruction to traffic and inconvenience to property owners affected by the Work.

The Contractor shall notify and coordinate the closing and construction of the driveways, curb, gutter and sidewalks with the Project Manager and the adjoining property owners in advance of Work in writing. The Contractor shall provide 72 hours written notice in advance of any construction that may affect access, parking and/or existing structures, including fences adjacent to that property.

Suitable access and parking will be maintained at all times. Access may be limited to half the existing driveway width for limited periods during concrete driveway and street construction. An additional verbal notice shall be provided to each business or property owner 30 minutes prior to the actual access drive closure.

Relocating of fences and structures shall be coordinated with property owners and shall include miscellaneous items including, but not limited to, utility services, street signs and mailboxes, sod replacement, sprinkler system modifications, control boxes, railroad tie walls, etc. If no such items are specifically included in the Contract, these items will be considered incidental to the work and are to be included in the unit prices. The Contractor shall coordinate the salvaging of any materials suitable for re-use with the City Inspector and, if on private property, with the respective property owners.

Any restrictions on street parking or traffic movement shall be coordinated with the City Traffic Engineer.

105.10 FAILURE TO MAINTAIN SAFE SITE

If the City becomes aware of failure to comply with applicable safety regulations, the Project Manager may inform the Contractor who shall take immediate steps to remedy the noncompliance. The Project Manager shall give written notification to the Contractor directing it to correct the unsafe acts or conditions. If the Contractor fails to comply with such a notification, the Project Manager may issue a Stop Work order in accordance with this Contract, and work shall only be resumed after adequate corrective actions have been taken to correct the safety deficiencies the Contractor has been notified of. Stoppage of work because of noncompliance with prescribed accident precaution measures shall not be considered a changed condition or changes in work, nor reason for extension of completion time.

In case of injury to persons or property by reason of failure to erect and to maintain necessary barricades, safeguards, and signals, or by reason of any act or omission of the Contractor, or Contractor's subcontractors, agents, or employees, during the performance of this Contract, the City may withhold payments due the Contractor so long as shall be reasonably necessary to indemnify the City on account of any such injuries, but the City's payment or failure to pay any sum shall not be considered a waiver of its right to indemnity under the this Contract.

105.11 EROSION AND DRAINAGE CONTROL

Contractor shall provide for the drainage of stormwater and such water as may be applied or discharged on the site in performance of the work per the latest revision of the City of Colorado Springs Drainage Criteria Manual, Volume II. Drainage facilities shall be adequate to prevent damage to the work, the site, and adjacent property.

The Contractor shall prevent the pollution of drains and watercourses by sanitary waste, sediment, debris or other substances resulting from this work. Contractor shall be required to clean up and isolate such materials on a continuing basis to prevent risk of washing into such drainage ways.

Should the affected areas of the Project exceed one acre, a Stormwater Discharge Permit shall be required. Affected area includes excavations, material stockpiles and areas where equipment and vehicles disturb the ground. An exact definition of the affected area should be obtained from the Colorado Department of Public Health and Environment (CDPHE).

105.12 POLLUTION

The Contractor shall at all times ensure compliance with applicable Federal, State, and Municipal air, water, and noise pollution laws and ordinances. The Contractor shall at all times have the proper sprinkling equipment available and shall apply water in the amount determined by each site condition or as directed by the Project Manager. The Contractor shall obtain all necessary permits at Contractor's expense, which may include, but not be limited to, El Paso County or a State Air Emission permit, State of Colorado Construction Activity permit, State of Colorado Dewatering permit and Section 404 Corp of Engineers permit, unless otherwise specified in the RFP.

105.13 TEMPORARY CONSTRUCTION

All temporary facilities, including the Contractor's field office which it may maintain at the site, and additional offices erected by subcontractors, shall be neatly constructed and arranged on the site in an orderly manner. The Contractor shall prepare and submit to the Project Manager, for approval prior to starting work, a construction plan layout, showing arrangement of storage areas, temporary buildings, equipment, and work areas. The Contractor shall provide suitable weather-tight storage sheds of capacity required to contain all materials which might be damaged by storage in the open. The Contractor shall at all times keep copies of all Contract Documents readily accessible at its office at the site.

105.14 TEMPORARY WATER SUPPLY

The Contractor shall provide, at Contractor's own expense, temporary water connections and water supply necessary for the prosecution of the work and permit all contractors on the work to use this supply at a reasonable prorated charge, or by sub-metering. The Contractor shall pay for all water consumed in the work, and shall arrange with Colorado

Springs Utilities for temporary connections and payment of service charges. Upon completion of the Contract work, all temporary waterlines shall be removed. The City will devise a method and plan to monitor and enforce the proper use of temporary water. The City will inspect for compliance.

105.15 TEMPORARY ELECTRICITY

The Contractor shall arrange with the Colorado Springs Utilities for temporary electricity necessary for the prosecution of the work. The Contractor shall pay for all electric current consumed, and shall permit all contractors on the work to use this supply at a reasonable prorated charge, or by sub-metering.

105.16 TEMPORARY HEAT

The Contractor shall provide adequate, temporary heat required during construction. Until the building or work area is enclosed, heavy tarpaulin shall be used to enclose any space requiring heating or protection from weather during construction operations. After the heating plant is in operating condition and the building is enclosed, heat may be provided from the permanent heating plant if such is approved by the Project Manager. In such case, the Contractor shall arrange to operate the plant, connect permanent or temporary radiation or unit heaters, and so maintain the plant during operation that it will be turned over to the City undamaged at the completion of the work. The Contractor shall provide all fuel required. In no case shall salamander heating be used in finished or plastered surfaces; instead, gas-steam radiators, unit heaters, or other suitable and approved means shall be used if the permanent heating plant is not available. This applies only to structures. It does not apply to road improvements or other outdoor improvements.

105.17 TEMPORARY ENCLOSURES

The Contractor shall provide and maintain temporary enclosures for the work as may be required to permit continuation of interior work during inclement weather, if wall and roof construction has progressed sufficiently to make interior work possible. This applies only to structures. It does not apply to road improvements or other outdoor improvements.

105.18 CLEAN-UP

The Contractor shall at all times keep the work area including storage and staging areas, free from accumulations of waste materials. The Contractor is also responsible for any costs associated with cleanup of debris from the work site or storage areas that may inadvertently be scattered outside the area by weather or vandalism. Upon completion of the work, the Contractor shall leave the work area in a clean neat and orderly condition satisfactory to the Project Manager.

SECTION 106 – ROYALTIES, PATENTS, SPECIAL LICENSES AND PERMITS

106.00 ROYALTIES AND PATENTS

The Contractor shall pay all applicable royalties and license fees. The Contractor shall defend all suits or claims for infringement of any patent rights and save the City harmless from loss on account thereof except that the City may be responsible for any such loss when a particular process, design, or the product of a particular manufacturer or manufacturers is specified, unless the City has notified the Contractor prior to the signing of the Contract that the particular process, design, or product is patented or is believed to be patented.

SECTION 107 – WORK PROVISIONS AND RULES

107.00 COMMENCEMENT AND COMPLETION OF WORK

(a) Preconstruction Conference. After issuance of Notice to Proceed, or as otherwise established by the City, a preconstruction conference ("Preconstruction Conference") shall be held for review of the construction schedule, Contractor's written list of subcontractors and suppliers, written list of all required permits, project contracts, utility support plan, water control plan, Traffic Control Supervisor name and telephone number, gradations, test results, certifications, review procedures for handling shop drawings and other submittals, processing applications for payment, and other pertinent items.

(b) At the Preconstruction Conference, the Contractor shall furnish the Project Manager a written list of all permits required for the proper completion of the Contract. The list shall clearly identify the type of permit or permits that must be obtained before work on any particular phase or phases of work can be started.

(c) The Contractor shall commence work within ten (10) Calendar Days of the date specified on the Notice to Proceed and complete the Contract within the number of Calendar Days or by the date specified in the proposal form. Unless otherwise noted in the Contract, the number of days are Calendar Days.

(d) The dates fixed for commencement and completion of the work may be extended by the Project Manager. All requests for extension of time by the Contractor shall be made in writing to the Project Manager and shall set forth the reasons for such requests. The Project Manager may fix the period of extension, if any. In addition, the Project Manager may grant a period of extension upon an execution of a Change Order. Any Project Manager's decision on extensions of time shall be binding upon the parties hereto. Requests for extension of time received twenty (20) or more days after the occurrence of the delay will not be honored. No requests for extension of time shall be honored if submitted after the completion date.

(e) If satisfactory execution and completion of the Contract shall require work or materials in greater amounts or quantities other than those set forth in the Contract, then the Contract time may be adjusted at the time of the execution of the Change Order. No allowance will be made for delays or suspension of the prosecution of the work due to the fault of the Contractor.

107.01 FAILURE TO COMPLETE WORK ON TIME, LIQUIDATED DAMAGES

If the Contractor fails to fully perform and complete the work in conformity to the provisions and conditions of the Contract within the specified time limit set forth in the Contract, including any extensions granted hereto, the Contractor may be subject to a stop work order, as provided in this Contract. In addition, the Contractor shall pay to the City for each Calendar Day of delay until such time the Contract is complete, liquidated damages

at the applicable daily rate below. The amounts shown are considered to be liquidated damages to reimburse the City for the additional cost of construction engineering and Contract administration services and in no case are considered a penalty.

Original Contract Amount	Amount of Liquidated Damages Per Day
Less than $50,000	$300.00
$50,000 to $100,000	$500.00
$100,000 to $500,000	$700.00
$500,000 to $1,000,000	$900.00
Over $1,000,000	$1500.00

107.02 WORK IN BAD WEATHER

No construction work shall be done during stormy, freezing, or inclement weather, except such as can be done satisfactorily, and in a manner to secure first class construction throughout, and then only subject to permission of the Project Manager.

The granting of a time extension for inclement weather does not imply or guarantee that additional compensation for incidental and appurtenant work caused by such weather will be approved or authorized by the Project Manager. Weather delays that can be reasonably anticipated shall not result in increased cost to the City. The Project Manager will be the sole judge as to the reasonableness of delays for inclement weather.

107.03 EXCUSABLE DELAYS

The Contractor's right to proceed will not be terminated, and the Contractor will not be charged with damages, for delays in completing the work that arise from unforeseeable causes beyond the control and without the fault or negligence of the Contractor. Examples of such causes include:

(a) Acts of God or of the public enemy,

(b) Acts of the government in either its sovereign or Contractual capacity,

(c) Acts of another contractor in the performance of a contract with the government,

(d) Fires,

(e) Floods,

(f) Epidemics,

(g) Quarantine restrictions,

(h) Strikes of employees other than Contractor's employees,

(i) Freight Embargos,

(j) Unusually severe weather, or

(k) Delays of subcontractors or suppliers at any tier arising from unforeseeable causes beyond the control and without the fault or negligence of both the Contractor and the subcontractors or suppliers.

107.04 COMPENSATION FOR COMPENSABLE DELAYS

If the Project Manager determines that a delay is compensable in accordance with the Contract, monetary compensation will be determined in accordance with this subsection.

(a) These categories represent the only costs that are recoverable by the Contractor. All other costs or categories of costs are not recoverable:

1. Actual, reasonable wages and benefits, including FICA, paid for additional non-salaried labor;

2. Reasonable and actual costs for additional bond, insurance and tax;

3. Increased, reasonable, and actual costs for materials;

4. Reasonable equipment costs calculated in accordance with the current edition of the Rental Rate Blue Book of Rental Rates for Construction Equipment for Contractor-owned equipment and based on invoice costs for rented equipment;

5. Reasonable and actual costs of extended job site overhead;

6. Reasonable subcontractor's claims (the same level of detail as specified herein is required for all subcontractors' claims)

7. An additional 10 percent will be added to the total of items (1), (2), (3), (4), (5), and (6) as compensation for items for which no specific allowance is provided, including profit, overhead, and general and administrative expenses.

(b) In adjustment for costs as allowed above, the City will have no liability for the following items of damages or expense:

1. Profit in excess of that provided in (a) above;

2. Loss of profit;

3. Additional cost of labor inefficiencies in excess of that provided in (a) above;

4. Home office or other overhead or general and administrative expenses in excess of that provided in (a) above;

5. Consequential damages, including but not limited to loss of bonding capacity, loss of bidding opportunities, and insolvency;

6. Indirect costs or expenses of any nature in excess of that provided in (a) above;

7. Attorney's fees, claim preparation fees, and expert fees.

All costs claimed must be documented and accompanied by a written certification from the Contractor.

107.05 EMERGENCY WORK

In an emergency affecting the safety of life or of the work or of adjoining property, the Contractor is, without special instructions or authorization from the Project Manager, hereby permitted to act at Contractor's discretion to prevent such threatening loss or injury. Contractor shall also act, without appeal, if so authorized or instructed by the Project Manager. Any reasonable compensation claimed by the Contractor on account of emergency work shall be determined by mutual agreement or in accordance with the Changes provision of this Contract.

107.06 VALUE ENGINEERING CHANGE PROPOSALS

The Contractor is encouraged to develop and offer proposals for improved construction techniques, alternative materials and other innovations. Proposals must provide a project comparable to the City's original design either at lower cost, with improved quality, or both. If a Value Engineering Change Proposal (VECP) Proposals shall be submitted only after contract award. If a VECP is rejected, the work shall be completed in accordance with the Contract at the Contract price. The Contractor shall have no claim against the City for compensable or noncompensable delay to the Contract based on the failure to respond to a VECP.

The Contractor may submit either a full VECP or a preliminary Conceptual VECP, followed by a full proposal. The City Engineer will provide timely review of all VECPs and advise the Contractor whether the VECP is complete or incomplete. When the VECP is complete, the Project Manager will advise the Contractor of either the approval of the VECP or the reasons for rejection of the VECP.

Cost savings generated to the Contract as a result of VECPs offered by the Contractor and accepted by the Project Manager shall be shared equally between the Contractor and the City.

If the Project Manager determines that the time for response indicated in the submittal under item (c)5 below is insufficient for review, the Contractor will be promptly notified. Based on the additional time needed by the Project Manager for review and the effect on the Contractor's schedule caused by the added time, the Project Manager will evaluate the need for a non-compensable time adjustment to the Contract.

(a) VECPs that will be considered are those that would produce savings to the City or provide improved Project quality without impairing essential functions and characteristics of the Project. Essential functions include but are not limited to: service life, economy of operation, ease of maintenance, desired appearance, safety, and impacts to the traveling public or to the environment during and after construction.

(b) Submittal of Conceptual Proposal. For VECPs that require a significant amount of design or other development resources, the Contractor may submit an abbreviated conceptual proposal for preliminary evaluation. The Project Manager will evaluate the information provided and advise the Contractor if any conditions or parameters of the conceptual proposal are found to be grounds for rejection. Preliminary review of a conceptual proposal reduces the Contractor's risk of subsequent rejection but does not commit the City to approval of the full VECP. The following information shall be submitted for each conceptual proposal.

1. A statement that the proposal is submitted as a conceptual VECP.

2. A general description of the difference between the existing Contract and the proposed change, and the advantages and disadvantages of each, including effects on cost, service life, economy of operation, ease of maintenance, desired appearance, safety, and impacts to the traveling public or to the environment during and after construction.

3. A set of conceptual plans and a description of proposed changes to the Contract specifications.

4. An estimate of the anticipated cost savings or increase.

5. A statement specifying:

a. when a response to the conceptual proposal from the City is required to avoid delays to the existing contract prosecution,

b. the amount of time necessary to develop the full Proposal,

c. the date by which a Change Order must be executed

to obtain maximum benefit from the VECP, and

d. the VECP's impact on time for completing the Contract.

(c) Submittal of Full Value Engineering Change Proposal. The following materials and information shall be submitted with each VECP.

1. A statement that the proposal is submitted as a VECP.

2. A description of the difference between the existing Contract and the proposed change, and the advantages and disadvantages of each, including effects on service life, economy of operation, ease of maintenance, desired appearance, safety, and impacts to the traveling public or to the environment during and after construction.

3. A complete set of plans and specifications showing the proposed revisions relative to the original Contract. This portion of the submittal shall include design notes and construction details. The proposed plans and specifications shall be signed and sealed by the Contractor's engineer.

4. A complete analysis indicating the final estimated costs and quantities to be replaced by the VECP compared to the new costs and quantities generated by the VECP. All costs and proposed unit prices shall be documented by the Contractor.

5. A statement specifying the date by which a Change Order must be executed to obtain the maximum cost reduction during the remainder of the Contract.

6. A statement detailing the effect the VECP will have on the time for completing the Contract.

7. A description of any previous use or testing of the proposed changes and the conditions and results. If the VECP was previously submitted on another City project, the VECP shall indicate the date, Contract number, and the action taken by the City.

8. An estimate of any effects the VECP will have on other costs to the City.

9. A statement of life cycle costs, when appropriate. Life cycle costs will not be considered as part of cost savings but shall be calculated for additional support of the VECP. A discount rate of four percent shall be used for life cycle calculations.

10. A statement specifying when a response from the City is required to avoid delays to the prosecution of the Contract.

(d) Evaluation. VECPs will be evaluated in accordance with the following:

1. The Project Manager will determine if a VECP qualifies for consideration and evaluation. The Project Manager may reject any VECP that requires excessive time or

costs for review, evaluation, or investigations. The Project Manager may reject proposals that are not consistent with the City's design policies and criteria for the Project.

2. VECPs, whether or not approved by the City, apply only to this Contract and become the property of the City. VECPs shall contain no restrictions imposed by the Contractor on their use or disclosure. The City has the right to use, duplicate and disclose in whole or in part any data necessary for the utilization of the Proposal. The City retains the right to utilize any accepted VECP or part thereof on other projects without obligation to the Contractor. This provision is subject to rights provided by law with respect to patented materials or processes.

3. If the City is able to demonstrate that it is already considering certain revisions to the Contract, prior to receipt of the VECP, or has approved certain changes in the Contract for general use that are subsequently proposed in a VECP, the Project Manager will reject the VECP and may proceed to implement these changes without obligation to the Contractor.

4. The Contractor shall have no claim against the City for additional costs or delays resulting from the rejection or untimely acceptance of a VECP. These costs include but are not limited to: development costs, loss of anticipated profits, increased material or labor costs, or untimely response.

5. VECP will be rejected if equivalent options are already provided in the Contract.

6. VECP that only reduce or eliminate Contract pay items will be rejected.

7. The savings generated by the VECP must be sufficient to warrant a review and processing, as determined by the Project Manager.

8. A VECP changing the type or thickness of the pavement structure or changing the design of a bridge will be rejected.

9. Additional information needed to evaluate VECPs shall be provided in a timely manner. Untimely submittal of additional information will result in rejection of the VECP. Where design changes are proposed, the additional information shall include results of field investigations and surveys, design and computations, and changed plan sheets required to develop the design changes.

(e) Payment. If the VECP is accepted, the changes and payment will be authorized by a Change Order. Reimbursement will be made as follows:

1. The changes will be incorporated into the Contract by changes in quantities of unit items, new agreed unit price items, or both, as appropriate, under the Contract.

2. The Price of the contract will be revised to reflect the changes in the VECP. The City will pay the Contractor 50 percent of the savings to the City upon completion of the Project. The savings to the City shall be the difference between the cost of the revised work and the cost of the related construction required by the original Contract computed at Contract prices.

3. Costs incurred by the Contractor for development, design, and implementation of the VECPs will not be reimbursed.

4. When work performed under an approved VECP is modified to fit field or other conditions, the maximum amount paid for the work will be limited to that which would have been paid if the work had been performed under the original Contract provisions. The rejection or limitation of reimbursement shall not constitute the basis of any claim against the City for delay or for other costs except as allowed under the original Contract.

107.07 AUTHORITY OF THE PROJECT MANAGER

The Project Manager will decide all questions regarding the quality and acceptability of materials furnished, work performed, and the rate of progress of the work, all interpretation of the plans and specifications, and the acceptable fulfillment of the Contract. The Project Manager will perform technical inspection of the work and shall have authority to reject all work and materials which do not conform to the Contract.

The Project Manager has authority to stop the work whenever such stoppage may be necessary to insure the proper execution of the Contract or for the convenience of the City. The Project Manager may order the Contractor, by giving ten (10) days written notice, to suspend, delay, or interrupt all or any portion of the work required by the Contract for a period of up to (10) ten Calendar Days at no additional cost to the City. The Project Manager may immediately stop the work when it is determined that the public's safety and welfare is in jeopardy.

The Project Manager will, within a reasonable time after their presentation to the Project Manager, make decisions in writing on all claims submitted to the City by the Contractor and on all other matters relating to the execution and progress of the work or the interpretation of the Contract Documents. The Project Manager's decisions shall be final.

107.08 DUTIES OF THE INSPECTOR

Inspectors employed by the City are authorized to inspect all work done and materials furnished. Any such inspection may extend to all or any part of the work and to the preparation, fabrication or manufacture of the materials to be used. An inspector is not authorized to alter or waive the provisions of the Contract. An inspector is not authorized to issue instructions contrary to the provisions of the Contract or to act as foreman for the Contractor.

107.09 CONSTRUCTION OBSERVATION AND INSPECTION

The Project Manager shall at all times have access to the work, and the Contractor shall provide proper equipment, materials and labor as required for such access and inspection.

All equipment, material, and articles incorporated into the work covered by this Contract shall be new and of the most suitable grade for the purpose intended, unless otherwise specifically provided in this Contract. The Project Manager shall have the right to reject materials and workmanship, which are defective, or require their correction. Rejected workmanship shall be satisfactorily corrected and rejected materials shall be removed from the premises and replaced without charge to the City. If the Contractor does not correct such rejected work and remove rejected materials within a reasonable time fixed by written notice, the City may remove them and charge the expense to the Contractor.

Should it be considered necessary or advisable by the Project Manager at any time before final acceptance of the entire work to make an examination of work already completed, by removing or tearing out same, the Contractor shall on request promptly furnish necessary facilities, labor and materials. If such work is found to be defective in any material respect due to fault of the Contractor or his subcontractors, he shall defray all the expenses of such examination and of satisfactory reconstruction. If, however, such work is found to meet the requirements of the Contract, the actual, reasonable cost of labor and material necessarily involved in the examination and replacement, plus ten (10) percent, will be allowed the Contractor.

All materials to be incorporated in the work, all labor performed, all tools, appliances, and methods used shall be subject to the inspection and approval or rejection of the Project Manager.

If the Project Manager points out to the Contractor, Contractor's foreman, or agent any neglect or disregard of the Contract provisions, such neglect or disregard shall be remedied and further defective work be discontinued immediately.

The Contractor shall execute the work only in the presence of the Project Manager or authorized representative, unless provision has been made for the work to proceed without complete engineering supervision or inspection. The presence of the Project Manager or authorized representative shall in no way relieve the Contractor of any responsibility under this Contract.

The observation of the work by the Project Manager is intended to aid the Contractor in applying labor, materials, and workmanship in compliance with the Contract provisions. Such observation, however, shall not relieve the Contractor from any of Contractor's Contract obligations.

107.10 CONTRACTOR COOPERATION

All work under this Contract shall be performed in a skillful and professional manner. The Project Manager shall have the authority to order the Contractor to remove from the work site any employee the Project Manager deems incompetent, careless, or otherwise objectionable to the general public or the City by notify the Contractor of such order in writing.

(a) Workmen, Methods and Equipment: Permission from the Project Manager to use any particular methods, equipment or appliances shall not be so construed as to relieve the Contractor from furnishing other equipment or appliances or adopting other methods when those in use prove unsatisfactory to the Project Manager, or as to bind the Project Manager to accept work which does not comply with the Contract.

107.11 CONTRACTOR'S RESPONSIBILITY FOR WORK

Until the work is accepted by the Project Manager as evidenced by the issuance of the Certificate of Completion, the Contractor shall have the charge and care thereof and shall take every necessary precaution against injury or damage to any part thereof by action of the elements or from any other cause, whether arising from the execution or from the non-execution of the work. The Contractor shall rebuild, repair, restore, and make good all injuries or damages to any portion of the work occasioned by any of the above causes before its completion and acceptance and shall bear the expense thereof.

The Contractor shall be responsible for the preservation of all public and private property, trees, fences, monuments, and other property, along and adjacent to the improvements and shall use suitable precautions necessary to prevent damage to pipes, conduits, and other underground structures. When or where any direct or indirect damage or injury is done to public or private property by or on account of any act, omission, neglect or misconduct in the execution of the work, or inconsequence of the non-execution thereof on the part of the Contractor, such property will be restored by the Contractor and at Contractor's expense to a condition similar, or equal to that existing before such damage or injury to the satisfaction of the City's Project Manager.

It shall be the responsibility of the Contractor, when moving or operating equipment, to make all arrangements for temporary crossings of telephone, transmission, pipe lines, railroad tracks, and irrigation ditches. This work shall not be paid for as a separate item but shall be considered as incidental to the project.

107.12 PROTECTION OF UTILITIES

The Contractor's attention is directed to the fact that utilities may encroach on the construction of this Project, and also to the importance of protecting all public/private utilities encountered on this project. These may include telecommunications, cablevision,

traffic signal lines, power lines, water lines, sewer lines, gas lines, railroad tracks, and other overhead and underground utilities.

The City does not warrant any survey work or location of utilities or other underground apparatuses whether performed by the City, its agent, or an independent contractor. Contractor understands and agrees any survey or location work performed by the City, its agent, or other independent contractor is provided for guidance purposes only, so as to show the approximate location of underground utilities or apparatuses. Contractor understands the existence or exact location of underground utilities or apparatuses may not be known to the City or the design engineer of record. Contractor, therefore, agrees that it shall verify the existence and location of any underground utilities or apparatus along the route of work. Verification shall be done by potholing or using other methods which will detect the exact depth, dimensions, and location of any underground utilities or apparatus.

Contractor shall be liable for any damages, loss, or claims of whatsoever kind caused by its failure to pothole or use other methods of identifying the exact depth, dimensions, and location of any underground utilities or apparatus. Contractor agrees that any claim of any kind whatsoever, damages, loss, lawsuit, demand, or request for equitable adjustment ("Claims"), shall be waived and the City shall be forever released and discharged from such Claims if Contractor fails to comply with its obligations under this section. Contractor agrees that if it fails to maintain all records or other evidence establishing that it potholed or otherwise determined the exact location, depth, and dimensions of all underground utilities and apparatuses, then it shall not be permitted to make any Claim arising from or related to the location of underground utilities or apparatus.

The size and location of all existing utilities as known to the Project Manager have been noted on the plans for the information and guidance of the Contractor. The Contractor shall be responsible for the location and protection of all utilities located within his working area regardless of whether or not their existence or location is shown or noted on the drawings.

It is the Contractor's responsibility to complete required work and to schedule inspections during normal working hours. The Contractor is responsible for contacting each affected utility for their inspectors' working hours. The Contractor is responsible to request an inspection two (2) working days in advance of the inspection. In the case of an overtime inspection, the request must be in writing. All overtime costs for inspection by Colorado Springs Utilities, or other utilities personnel, shall be the Contractor's expense. The City will not entertain any requests for time extensions for delays caused by the Contractor's failure to properly notify the affected utility of a required inspection or the Contractor's failure to complete the required work by the time of the scheduled inspection.

Any information concerning underground utilities shown on the drawings is intended to be merely an aid to the Contractor. The accuracy of information with respect to underground utilities is not guaranteed. The Contractor shall make their own investigation, including exploratory excavations, to determine the locations and type of existing mains or service laterals or appurtenances when their presence can be inferred from the presence of other visible facilities, such as building, manholes, inlets, meters and junction boxes, on or adjacent to the site of the work. If the Contractor discovers utility facilities not identified in the plans or specifications or in a position different from that shown in the plans and specifications, the Contractor shall immediately notify, verbally and in writing, the Project Manager and Owner of the utility facility.

Before any excavation is begun in the vicinity of water lines, railroad tracks, or structures, sewer lines, telecommunication conduits or cablevision line, each utility company, including Colorado Springs Utilities (if applicable), department, or company concerned must be notified in advance of such excavation, and such excavation shall not be made until an authorized representative of the utility concerned is at the site.

All utilities encountered must be kept in operation by the Contractor and must be protected and/or repaired at the Contractor's own expense, unless otherwise specified in the Contract documents. The Contractor shall be held liable for all damages to any and all public utilities encountered on the project, which damages are due to the Contractor's operations. Such damages shall include all physical damages to utilities and also all damages due to interruption of service of such utilities, when such damages and interruptions are caused by the Contractor's operations.

Where alterations or moving of utilities is not required to permit construction of the project, the Contractor shall take such measures as the Project Manager may direct to properly protect these utilities throughout his construction operations and shall cooperate at all times with the proper authorities and/or owners in maintaining service of railroads, conduits, pole lines, transmission lines, pipe lines, sewers, etc., affected by this project.

The costs of damages due to the Contractor's operation shall not be allowable under this Contract and shall result in no additional cost to the City. The cost of protecting utilities where alteration or relocation is not required to permit construction of the project shall be considered as included in the original Contract price for the project and shall result in no additional cost to the City.

Should any pipe line, water lines, or gas mains, electrical conduits, sewer pipes, overhead wiring, telecommunication lines, power lines, or any other such utilities, not specifically mentioned and provided for elsewhere as a part of this Contract, have to be moved, repaired, reconditioned, or revised due to the construction, or moved temporarily to permit construction of the project the party or parties owning and operating such utilities shall perform the actual work of moving, repairing, reconditioning, or revising such utilities. Any such work would be added via change order, and the cost of this work will be borne by

Colorado Springs Utilities, the utility companies involved, or other means arranged by the City.

(a) Existing Utilities

1. Existing Gas Lines: As of April 1, 1983, Federal law requires anyone who uncovers a gas line to report it to the gas company and allow it to be inspected by the gas company personnel before it is backfilled. Colorado Springs Utilities or other provider is to be notified prior to any excavation around gas lines. A Colorado Springs Utilities. or other applicable provider. inspector is to be notified and present on site prior to construction activities around gas lines.

2. Existing Sewer Mains and Services: All relocation, replacement protection shown on the plans or determined necessary by the inspector shall be performed according to the latest Colorado Springs Utilities Wastewater Standard Specifications. Minimum 48 hours' notice must be given to Colorado Springs Utilities prior to any related work.

3. The Contractor shall adjust sanitary sewer manhole rims to an elevation acceptable to Colorado Springs Utilities. The Contractor shall contact Colorado Springs Utilities twenty-four (24) hours prior to manhole rim adjustments.

4. Existing Water Mains and Services: All relocation, replacement or protection shown on the plans or determined necessary by the inspector shall be performed according to the latest Colorado Springs Utilities Water Standard Specifications and the Water Service Standard Specifications. Minimum 48-hour notice must be given to Colorado Springs Utilities prior to any related work. Colorado Springs Utilities reserves the right to schedule any operations at their discretion and to provide for any requirements determined necessary to perform the work. The Contractor shall coordinate with the Colorado Springs Utilities and receive their approval prior to performance of the work.

(b) Utility Support Systems:

1. If required by the Contract documents, or requested by the Project Manager, the Contractor shall submit shop drawings for the method of temporary support for all existing utilities during construction. The temporary support details for existing utilities shall be submitted for review and approval prior to performance of the work. Shop drawings must bear the seal of a Professional Project Manager registered in the State of Colorado, unless so waived by the City.

2. Regardless of City approved shop drawings, the Contractor shall be responsible for the satisfactory support of the utility system and any damages that may occur to the utility involved.

(c) Electric Utility Installation:

1. Any electric facilities unless otherwise noted are to be relocated or modified by Colorado Springs Utilities. The Contractor shall coordinate the work with Colorado Springs Utilities and Colorado Springs Utilities Contractor.

2. Light Pole Installation or Relocation:

a. The Contractor is responsible for coordinating with Colorado Springs Utilities, removing existing light pole foundations, constructing new light pole foundations, installing new conduits, and installing lighting junction boxes. The Contractor is responsible for coordinating with Colorado Springs Utilities for the de-energizing and removal of existing light poles.

b. Colorado Springs Utilities will remove the existing light standards, reset the light standards upon completion of the new foundations, conduit and junction boxes, pulling wire, and beginning operations of the lighting within the project limits. The Contractor is responsible for scheduling and coordination with Colorado Springs Utilities crews for reinstallation and re-energizing completed light poles.

(d) Gas Utilities: The Contractor is responsible for coordinating with Colorado Springs Utilities for the relocation of existing Gas lines. Colorado Springs Utilities will relocate the existing gas lines as necessary to install project improvements within the project limits. The Contractor is responsible for scheduling and coordination with Colorado Springs Utilities crews.

(e) Telecommunication Agencies: Any telephone facilities unless otherwise noted are to be relocated or modified by the respective private utility company. The Contractor shall coordinate the work with the respective private utility company.

(f) Cablevision: The television utilities are to be relocated by the cable provider. The Contractor shall coordinate the work with any affected cable provider.

107.13 FEDERAL FUNDS

If this Contract is a federally assisted construction contract all applicable federal requirements, terms and conditions, provisions and forms shall apply. Additionally, during the performance of this Contract, the Contractor agrees as follows:

1. The Contractor will not discriminate against any employee or applicant for employment because of race, color, religion, sex, sexual orientation, gender identity, or national origin. The Contractor will take affirmative action to ensure that applicants are employed, and that employees are treated during employment, without regard to their race, color, religion, sex, sexual orientation, gender identity, or national origin. Such action shall include, but not be limited to the following: employment, upgrading, demotion, or transfer; recruitment or recruitment advertising; layoff or termination; rates of pay or other forms of compensation; and selection for training, including apprenticeship. The

Contractor agrees to post in conspicuous places, available to employees and applicants for employment, notices to be provided by the contracting officer setting forth the provisions of this nondiscrimination clause

2. The Contractor will, in all solicitations or advancements for employees placed by or on behalf of the Contractor, state that all qualified applicants will receive consideration for employment without regard to race, color, religion, sex, sexual orientation, gender identity, or national origin.

3. The Contractor will not discharge or in any other manner discriminate against any employee or applicant for employment because such employee or applicant has inquired about, discussed, or disclosed the compensation of the employee or applicant or another employee or applicant. This provision shall not apply to instances in which an employee who has access to the compensation information of other employees or applicants as a part of such employee's essential job functions discloses the compensation of such other employees or applicants to individuals who do not otherwise have access to such information, unless such disclosure is in response to a formal complaint or charge, in furtherance of an investigation, proceeding, hearing, or action, including an investigation conducted by the employer, or is consistent with the contractor's legal duty to furnish information.

4. The Contractor will send to each labor union or representative of workers with which he has a collective bargaining agreement or other Contract or understanding a notice advising the labor union or workers representative of the Contractor's commitments under Section 202 of Executive Order No. 11246 of September 24, 1965, and shall post copies of the notice in conspicuous places available to employees and applicants for employment.

5. The Contractor will comply with all provisions of Executive Order 11246 of September 24, 1965, and of the rules, regulations, and relevant orders of the Secretary of Labor.

6. The Contractor will furnish all information and reports required by Executive Order 11246 of September 24, 1965, and by the rules, regulations and orders of the Secretary of Labor, or pursuant thereto, and will permit access to his books, records, and accounts by the Secretary of Labor, State of Colorado Civil Rights Commission and any other governmental agency entity which may be assisting with the funding under this Contract for purposes of investigation to ascertain compliance with such rules, regulations and orders.

7. In the event of the Contractor's noncompliance with the nondiscrimination clauses of this Contract or with any such rules, regulations, or orders, this Contract may be cancelled, terminated, or suspended in whole or in part, and the Contractor may be declared ineligible for further government Contracts or Federally assisted construction Contracts in accordance with the procedures authorized in Executive Order No. 11246 of

September 24, 1965, and such other sanctions may be imposed and remedies invoked as provided in Executive Order No. 11246 of September 24, 1965, or by rule, regulation, or order of the Secretary of Labor, or otherwise provided by law.

8. The Contractor shall include the provisions of Paragraphs (1) through (8) in every subcontract or purchase order unless exempted by rules, regulations, or orders of the Secretary of Labor issued pursuant to Section 204 of Executive Order No. 11246 of September 24, 1965, so that such provisions will be binding upon each subcontractor or vendor. The Contractor will take such action with respect to any subcontract or purchase order as the city, state, or any federal governmental entity may direct as a means of enforcing such provisions, including sanctions for noncompliance. Provided, however, that in the event the Contractor becomes involved in, or is threatened with, litigation with a subcontractor or vendor as a result of such direction, the Contractor may request the city, the state, or the United States to enter into such litigations to protect the interests of such governmental entity.

107.14 SUPERINTENDENCE

The Contractor shall give the work the constant attention necessary to facilitate the progress thereof and shall cooperate with the Project Manager and with other contractors or Colorado Springs Utilities employees in every way possible. The Contractor shall have at all times, on the work, as Contractor's agent, a competent superintendent capable of reading and thoroughly understanding the Plans and Specifications, and who shall have the necessary authority to receive and promptly execute the instructions and orders from the Project Manager or the Project Manager's authorized representative. Such superintendent shall be furnished irrespective of the amount of work sublet. The Contractor shall supply the Project Manager with a list of phone numbers at which the Contractor and its superintendent and foreman can be reached at any time. The assigned superintendent must adhere to the cooperation requirements specified in this Contract and is subject to removal if so ordered in writing by the Project Manager.

107.15 PREPARATION

All vegetation, stumps, and debris and other objectionable objects shall be removed from the area staked out by the Project Manager, and where necessary from the area immediately adjacent thereto. Such debris shall be hauled from the site of the construction and wasted as directed by the Project Manager.

107.16 STAKING WORK

The Project Manager may provide reference points (horizontal and vertical control) only, unless otherwise noted in the proposal and project specifications. The Contractor shall engage the services of a licensed surveyor or surveying firm (hereinafter referred to as the Surveyor) to be approved by the Project Manager. The Surveyor shall perform all detailed construction layout and staking including the staking of all storm sewer, street

improvements, and utility relocations in accordance with the plans and specifications. The Contractor shall be responsible for the correctness and accuracy of the detailed layout of finished structures.

Any instrument man or survey assistant employed on the work by the Contractor or his subcontractors, who are judged by the Project Manager to be incompetent, shall be removed from the work and replaced by a competent individual.

107.17 DEVIATION ALLOWED

Finished surfaces in all cases shall conform to lines, grades, cross sections and dimensions shown on the approved drawings or described in the Specifications. Deviations from the approved drawings and working drawings as may be required by the expediencies of construction, in all cases, must be determined by the Project Manager and authorized in writing. If the Project Manager deems it inexpedient to correct work injured or done in an unauthorized manner, an equitable deduction from the Contract price of the work done shall be made by the Project Manager subject to approval of the City Procurement Services Manager.

107.18 RIGHT-OF-WAY

The City's right-of-way will in general be adequate for construction purposes. Nothing marked on the drawings shall be interpreted as giving the Contractor exclusive occupancy of the territory provided by the City. The City and its employees for any purpose, and other contractors of the City, for any purpose required by their respective contracts, may enter upon or occupy any portion of the land furnished by the City. When the territory of one contract is a necessary or convenient means of access for the execution of another contract, such privileges of access or any other reasonable privilege shall be granted by the Contractor to the extent, amount, in the manner and at times necessary. No such joint occupancy or use of the territory shall be made as the basis of any claim for delay or damages.

107.19 SHOP DRAWINGS AND SUBMITTALS

The Contractor shall submit to the Project Manager all shop drawings and submittals required for the work, including those pertaining to structural and reinforcing steel within fifteen (15) Calendar Days from the date of the Notice of Award. The Contractor shall make any corrections in the drawings required by the Project Manager and resubmit the same without delay.

Three final copies of all shop drawings (if applicable), submittals (if applicable) and schedules shall be submitted to the Project Manager, who after checking will retain two copies and return one copy to the Contractor. The Project Manager's approval of shop drawings of equipment and material shall extend only to determining the conformity of such equipment and materials with the general features of the design drawings prepared

by the Project Manager. It shall be the responsibility of the Contractor to determine the correctness of all dimensions and minor details of such equipment and materials so that when incorporated in the work, correct operations will result.

107.20 RECORD DRAWINGS

The Contractor shall maintain an up-to-date set of Contract drawings and Contract records, legibly marked; depicting all constructed improvements at the site or as otherwise specified and shall submit a complete set labeled "Project Record" to the Project Manager upon completion of the Project.

(a) Drawings:

1. Depths of various elements of foundation in relation to finish floor datum.

2. Horizontal and vertical locations of underground utilities and appurtenances, referenced to permanent surface improvements and Project survey control.

3. Location of internal utilities and appurtenances concealed in the construction, referenced to permanent surface improvements and project survey control.

4. Field changes of dimensions and detail.

5. Changes made by Change Order.

6. Details not on original Contract drawings.

(b) Specifications and Addenda:

1. Manufacturer, trade name, catalog number, and supplier of each product and item of equipment actually installed.

2. Changes made by Change Order.

107.21 MATERIALS

Unless otherwise stipulated in the Specifications, all workmanship, equipment, materials, and articles incorporated in the work covered by this Contract are to be new and of the best grade of their respective kinds for the purpose. The Contractor shall furnish to the Project Manager for the Project Manager's approval, the name of the manufacturer of machinery, mechanical and other equipment, which he contemplates installing, together with their performance capacities and other pertinent information including but not limited to instruction manuals pertaining to the use and operation of such machinery, mechanical and other equipment.

When required by the Specifications, or when called for by the Project Manager, the Contractor shall furnish for approval full information concerning the materials or articles which he contemplates incorporating in the work. Samples of materials shall be submitted for approval when so directed. Machinery, equipment, materials, and articles installed or used without such approval shall be at the risk of subsequent rejection.

107.22 MATERIAL INSPECTION AT PLANT

If the Project Manager inspects the materials at the source, the following conditions shall be met:

(a) The Project Manager shall have the cooperation and assistance of the Contractor and the materials producer.

(b) The Project Manager shall have full entry to all parts of the plant necessary for the manufacture or production of the materials being furnished.

(c) Adequate safety measures shall be provided and maintained.

The City reserves the right to retest all materials which have been previously tested or inspected. The retesting may be prior to or after incorporation of the materials into the work. Those materials inspected and tested after delivery on the Project or after incorporation into the work that do not meet the requirements of the Contract will be rejected and replaced at no additional cost to the City.

107.23 HANDLING MATERIALS

All materials shall be handled so their quality and fitness for the work is preserved. Aggregates shall be transported to the work in vehicles constructed to prevent loss or segregation of materials.

107.24 CITY FURNISHED MATERIALS

Material furnished by the City will be made available to the Contractor at the points specified in the Contract.

The cost of handling and placing materials after they are made available to the Contractor shall be considered as included in the Contract price for the item, and shall result in no additional cost to the City.

The Contractor will be held responsible for all material received until it is incorporated into the work and accepted.

Demurrage charges resulting from the Contractor's failure to accept the material at the designated time and point of delivery will be deducted from monies due the Contractor.

107.25 BUY AMERICA REQUIREMENTS

All manufacturing processes, including the application of a coating, for all steel and iron products permanently incorporated in the work shall have occurred in the United States of America. All manufacturing processes are defined as “processes required to change the raw ore or scrap metal into the finished, in-place steel or iron product”. This requirement will not prevent a minimal use of foreign steel or iron provided the total project delivered cost of all such steel and iron which includes the cost of delivering the steel and iron to the Project, does not exceed one-tenth of one percent of the total Contract cost or $2,500, whichever is greater.

With every steel or iron product that requires pre-inspection, pretesting, certified test results, or certificate of compliance, the Contractor shall provide a certification by each supplier, distributor, fabricator, and manufacturer that has handled the steel or iron product that every process, including the application of a coating, performed on the steel or iron product either has or has not been carried out in the United States of America. These certifications shall create a chain of custody trail that includes every supplier, distributor, fabricator, and manufacturer that handles the steel or iron product. The lack of these certifications will be justification for rejection of the steel or iron product. Upon completion of the Project, the Contractor shall certify in writing of compliance with this requirement and provide evidence of the Project delivered cost of all foreign steel or iron permanently incorporated into the Project.

107.26 TESTING OF MATERIALS

Tests and Inspections. The City will employ and pay for the services of an approved testing laboratory to perform specified services for the field testing of:

(a) Soil Compaction Control

(b) Cast-in-Place Concrete

(c) Asphalt Concrete Pavement

The Contractor shall perform, or arrange for the performance, and pay all costs in connection therewith, all other tests and inspections required by the Contract documents. The Contractor shall pay for all testing laboratory services in connection with tests verifying conformance of proposed materials and installation with project requirements including, but not limited to, mix designs, riprap, gradation tests for embedment, fill and backfill materials. The City shall pay for testing laboratory services in connection with tests on materials after incorporation into the project, unless retesting of materials is necessary because of the failure of the materials to meet the Project requirements. The Contractor shall obtain the City's written acceptance of the testing laboratory before having services performed.

(a) Requirements for Independent Testing Consultants.

1. Consultants shall comply with "Recommended Requirements for Independent Laboratory Qualifications", latest edition, published by the American Council of Independent Laboratories, and basic requirements of ASTM E-329, "Standards of Recommended Practice for Inspection and Testing Agencies for Concrete, Steel, and Bituminous Materials as Used in Construction", latest edition.

2. The Contractor shall submit to the City for prior approval, the name and address of the proposed testing laboratory with description of personnel, facilities, equipment and other qualification data, including certificate of calibration of applicable testing equipment made by an accredited calibrated agency no more than twelve (12) months prior to submittal date.

(b) Test Reports

1. Testing agency shall be instructed to submit directly to the City three (3) copies of all reports of tests or inspections made, showing compliance, irregularities or deficiencies, identifying Project, date of test, location in Project, applicable specification section, applicable standard(s) for compliance, observations relating to compliance, name and signature of inspector.

(c) Contractor Responsibilities

1. Furnish access to the work, materials, equipment and labor required to accommodate inspections and tests when testing laboratory is retained by the City. In the event retesting of materials or recompaction is necessary because of the failure of the materials or compaction to meet the Project requirements, the cost of said retesting shall be borne by the Contractor. Cost of said retest will be deducted from the final payment amount due the Contractor, or invoiced directly to the Contractor at the City's discretion.

(d) Reliance on Technical Data

Without warranty or representation as to the accuracy or completeness of any information or data, Contractor may rely upon the general accuracy of the “technical data” contained in the reports, specifications and drawings. The “technical data” is identified in the work technical specifications, drawings and reports that are signed and sealed by a registered Professional Engineer, Architect or Landscape Architect in the State of Colorado. Except for the reliance on the general accuracy of the “technical data,” Contractor may not rely upon or make any claim against the City with respect to:

1. the accuracy or completeness of such reports and drawings for Contractor’s purposes, including, but not limited to, any aspects of the means, methods, techniques,

sequences, and procedures of construction to be employed by Contractor, and safety precautions and programs incident thereto; or

2. other data, interpretations, opinions, and information contained in the reports or shown or indicated in such drawings; or

3. any Contractor interpretation of or conclusion drawn from any "technical data" or any such other data, interpretations, opinions, or information.

107.27 UNANTICIPATED CIRCUMSTANCES

Contractor understands that this is a firm fixed price contract and so long as there are no changes in the scope of work or unanticipated circumstances as provided in subsection A-C below, Contractor must deliver the project for the agreed price. The parties agree that not every circumstance can be anticipated or known at the time this Contract was executed. Compensation for unanticipated circumstances, limited to subsections A –C, shall, at the City's sole discretion, be provided by the following method(s): (1) Unit prices previously approved; (2) allowing additional compensation on a time and materials method, not to exceed an agreed-to amount; (3) an agreed lump sum; and/or (4) the actual cost of:

(a) labor (including foreman and additional supervision, if necessary);
(b) materials necessary for incorporation into the Project:
(c) rental cost of construction plant and equipment used for work:
(d) Power and fuel required for operation of power equipment necessary to perform work;
(e) Contractor shall provide to the City physical evidence of all costs, including, but limited to, payroll, invoices, vouchers, estimates, bills, accounting records, or other relevant records. Contractor agrees that its failure to provide evidence of a claimed cost shall be a waiver of such cost(s) and the City shall be released and forever discharged from any claim of any kind whatsoever, loss, damages, request for equitable adjustment, or demand related thereto. Contractor further agrees that, at the City's discretion, a fixed fee, not to exceed 10% of the costs of work shall be added to such costs as compensation for the cost of management, insurance, benefits, bond, profit, and any other expenses.

To the extent unanticipated circumstances arise, Contractor shall follow the procedures and processes set forth herein and, if applicable, the Dispute Resolution provisions of this Contract. Contractor agrees that its failure to follow the processes set forth herein and the Dispute Resolution process shall forever waive, release, and discharge the City from any claim of any kind whatsoever, damages, losses, lawsuits, or demands known or unknown. Additionally, the terms "detail" or "particularity" mean specificity, providing the exact basis and reason therefor with citations to the Contract or Contract Documents. Vague or ambiguous references such as "other matters" or "other costs" shall not be permitted and are not subject to any compensation method whatsoever.

A. Differing Site Conditions or Changed Conditions: A differing site condition or changed condition means subsurface, latent, or unknown physical site conditions that

are materially different than that which is indicated in the contract and which is not ordinarily encountered and generally recognized in the work provided for in the Contract.

Contractor understands the City must be permitted the opportunity to timely investigate all differing site/changed condition matters; document conditions as they existed on the site at the time; take measurements, photographs, witness statements and the like; negotiate a compromise resolution with the Contractor and/or subcontractors; and avoid the cost, expense and delay of formal litigation.

Upon discovering a differing site condition, the Contractor shall not disturb the conditions and immediately contact the Project Manager. Within five days of discovering the condition, the Contractor shall provide written notice to the Project Manager of the condition. The written notice shall describe the condition with particularity; provide the precise material difference of the condition from the Contract, design plans, and/or other Contract Documents; describe, in detail, how the condition is not a condition that would be ordinarily encountered and generally recognized in the work provided for in the Contract; and provide a detailed explanation, including all accounting and other evidence supporting, Contractor's losses, costs, delays, and changes in time required for performing the work. Contractor agrees that any claim, loss, damage, delay, or change in time that is not supported by evidence shall be disallowed. Contractor waives and forever releases and discharges the City from any claim of whatsoever kind, loss, damages, demand, and/or request for equitable adjustment whether known or unknown by disturbing the condition before notifying the Project Manager and by failing to provide timely detailed written notice as required herein. Any issue which is not provided for, in detail, in the written notice shall also be waived and the City shall be forever released ad discharged from any claim whatsoever, loss, damage, or request for equitable adjustment, or demand arising therefrom.

After Contractor fully complies with the provisions in this section and after receiving the written notice, the Project Manager shall promptly investigate the condition and determine whether such condition materially differs from that indicated in the Contract Documents and whether it is a condition that would not ordinarily be encountered and generally recognized in the work provided for in the Contract. If the Project Manager determines the condition is a "differing site condition," then a Change Order shall be issued describing the differing site condition and compensation method agreed to by the parties. By signing the Change Order, Contractor agrees the City shall be released and fully discharged from any claim whatsoever, loss, damage, request for equitable adjustment, or demand arising from the matters described in the Change Order. The parties shall also sign a document which describes in detail each condition and each claim, loss, damage, delay, or change in time related to that particular condition which was agreed to and fully resolved as well as any condition and each claim loss, damage, delay, or change in time related to that particular condition which is disputed.

If the Contractor disputes, disagrees with, or otherwise considers unfair any decision or ruling by the City, then Contractor shall, within 10 Calendar Days, provide the City with

written notice of the dispute as set forth in the dispute section of this Contract and shall follow the dispute resolution process provided therein.

B. Defective or Deficient Construction Plans or Documents: A defective or deficient construction plan or document means a material error, mistake, oversight, or omission in the design plans or documents providing the specifications depicting the general and detail features of the work to be performed.

Upon discovering a defect or deficiency, the Contractor shall immediately contact the Project Manager. Within five days of initially advising the Project Manager of the defect or deficiency, the Contractor shall provide written notice to the Project Manager. The written notice shall describe the defect or deficiency with particularity explaining why it is a material defect or deficiency; provide precise detail explaining why the defect or deficiency is not something Contractor should know how to do or why the defect or deficiency is not a condition that would be ordinarily encountered and generally recognized in the work provided for in the Contract; and provide a detailed explanation, including all accounting and other evidence supporting, Contractor's losses, costs, delays, and changes in time required for performing the work. Contractor agrees that any claim, loss, damage, delay, or change in time that is not supported by evidence shall be disallowed. Contractor agrees that it shall waive and forever release and discharge the City from any claim of whatsoever kind, loss, damages, demand, and/or request for equitable adjustment whether known or unknown by failing to immediately notifying the Project Manager and by failing to provide timely detailed written notice as required herein. Any issue which is not provided for in the written notice shall also be waived and the City shall be forever released ad discharged from any claim whatsoever, loss, damage, or request for equitable adjustment, or demand arising therefrom.

After Contractor fully complies with the provisions in this section and after receiving the written notice, the Project Manager shall promptly investigate the condition and determine whether such matter is a "defective or deficient design plan or document" as defined herein. If the Project Manager determines the matter is a "defective or deficient design plan or document," then a Change Order shall be issued describing the defective or deficient design plan or document, the correction and compensation method agreed to by the parties. By signing the Change Order, Contractor agrees the City shall be released and fully discharged from any claim whatsoever, loss, damage, request for equitable adjustment, or demand arising from the matters described in the change order. The parties shall also sign Form A of this Contract which describes in detail each condition and each claim, loss, damage, delay, or change in time related to that particular condition which was agreed to and fully resolved as well as any condition and each claim loss, damage, delay, or change in time related to that particular condition which is disputed.

If Contractor disputes, disagrees with, or otherwise considers unfair any decision or ruling by the City, then Contractor shall, within 10 Calendar Days, provide the City with written notice of the dispute as set forth in the Dispute Resolution section of this Contract and shall follow the dispute resolution process provided therein.

C. Changes in Work and Additional/Extra Work (fixed price contract): When additional information through excavation, testing, site investigation, differing site conditions, or otherwise is obtained the City shall have the right to alter, change the location, re-design, change the work, add to the work, accelerate work, or reduce work, change the method or manner of performance, change services, and/or change materials described in the Contract (collectively "Changed Work").

If the City changes work, then a Change Order shall be issued by the Project Manager. Contractor shall not be required to perform any Changed Work without a Change Order issued by the Project Manager. Such Changed Work shall be performed under the terms set forth in the original Contract and compensated as agreed in this section of the Contract.

If Contractor disputes any Changed Work or compensation method for such Changed Work requested by the City or set forth in a Change Order, Contractor shall, without delay, perform such work. Within 10 Calendar Days of receiving the Change Order, Contractor shall provide the City with written notice of the dispute as set forth in the Dispute Resolution section of this Contract and shall follow the dispute resolution process provided therein. Contractor further agrees that any issue not provided for, in detail, in the written notice shall also be waived and the City shall be forever released ad discharged from any claim whatsoever, loss, damage, or request for equitable adjustment, or demand arising therefrom. Any matter resolved through the Dispute Resolution process shall be set forth in Form A of this Contract which describes in detail each Changed Work, including the compensation method, which was agreed to and fully resolved. By signing Form A, Contractor agrees that the City shall be released and fully discharged from any claim whatsoever, loss, damage, request for equitable adjustment, or demand arising from the matters described in Form A.

If Contractor does not dispute any Changed Work or the compensation method for such work, then Contractor shall sign the Change Order and agrees that the City shall be released and fully discharged from any claim whatsoever, loss, damage, request for equitable adjustment, or demand arising from the matters described in the Change Order.

Contractor agrees that the Project Manager shall have the authority to make minor changes in the work which do not involve additional costs and are not inconsistent with the purpose and scope of the work.

If the City finds it necessary or advisable, the City may omit, increase, or decrease any items as it may deem necessary or desirable without changing the unit prices in the proposal, provided such increase or decrease does not exceed 15% of the total monetary value of the original Contract. If material or labor involved in such change is not included in the unit prices of the Contract, but forms an inseparable part of the work to be done under this Contract, and the delay involved in asking for the bids or proposals and the letting of a new contract therefore might result in damage, injury, or impairment of the

plant, work system, or other property belonging to the City, the City may in its discretion declare an emergency and require Contractor to proceed with such alterations and additions. The Contract shall not be required to perform such work or furnish extra materials without a Change Order issued by the Project Manager.

107.28 DISPUTE RESOLUTION

Mindful of the high cost of litigation, not only in dollars, but also in time and energy, the parties intend to and do hereby establish the following out-of-court alternate dispute resolution procedure to be followed in the event any dispute, claim of any kind, loss, damage, demand, request for equitable adjustment, or controversy should arise out of, or relating to this Contract or relating to any Change Order or other changes or addendums to this Contract. During the dispute resolution procedure provided in this section, Contract shall continue to perform the work as provided for in this Contract as modified by any Change Order or Contract amendment. Nothing in this section precludes the parties from pursuing any other remedy afforded by the laws of the State of Colorado once the remedies afforded under this Contract have been complied with and exhausted.

A. Disputes Arising from Unanticipated Circumstances: If Contractor disputes, disagrees with, or considers any decision, order, ruling, demand, request, directive, Change Order, or Contract amendment, related to the Unanticipated Circumstances provision of this Contract, and issued by the City, whether verbally or in writing, then Contractor shall:

1. Within 10 days of the City issuing any written or verbal decision, order, ruling, demand, request, directive, Change Order, or Contract amendment, Contractor shall provide written notice to the Project Manager identifying, with specific detail, each disputed matter. Any Unanticipated Circumstance dispute or matter of any kind or nature whatsoever, which Contractor does not identify in detail shall be waived and the City is released and fully discharged from any claim whatsoever, loss, damage, request for equitable adjustment, or demand arising from any matter not explicitly set forth in the written notice and described in detail;

2. Contractor shall provide to the City all evidence of any claim of whatsoever kind, loss, damages, delay cost, or other costs, including, but not limited to payroll reports, daily logs, invoices, accounting file, receipts, email, or other relevant record or document. Any item claimed by Contractor shall be supported by verifiable evidence described herein. If Contractor requires additional time to obtain or compile such evidence, then the Contractor shall have an additional 30 days, but must identify the exact document(s) or other evidence needed, where it is maintained, and explain why it is not available. The City shall not be responsible for any delay or other damage arising from Contractor's request for additional time to obtain documents. Any item unsupported by verifiable evidence shall be waived and Contractor agrees to release and fully discharge the City from any claim of whatsoever kind, loss, damage, request for equitable adjustment, or demand related to such unsupported item.

3. Upon receipt of Contractor's written notice, the Project Manager will investigate the disputed matter(s) and issue a written decision, ruling, order, and/or directive to Contractor. If Contractor does not dispute the Project Manager's decision, ruling, order, or directive, or a compromise has been reached, then Contractor shall sign Form A. If Contractor disputes or disagrees with the Project Manager's Ruling, then within 20 days of receiving the Project Manager's decision, ruling, order, and/or directive, Contractor must file with the City a written request for review to the City Engineer or City's Manager of the Procurement Services Division. The written request for review shall (a) state in detail the exact issue raised to the Project Manager and the issue(s) related to those matters raised to be reviewed by the City Engineer or Procurement Services Manager; (b) provide an analysis, detailing the basis, reason therefor and the how and why Contractor disagrees with the Project Manager's decision, ruling, order, or directive; and (c) attach all evidence supporting Contractor's dispute. If Contractor fails to provide a timely written request for review to the City Engineer or Procurement Services Manager, then Contractor agrees that it waives, releases, and forever discharges the City from any claim of whatsoever kind, loss, damage, request for equitable adjustment, or demand arising from or related to the Project Manager's decision, ruling, order, or directive.

4. The City Engineer's or Procurement Services Manager's decision shall be final and conclusive for the City of Colorado Springs. If Contractor disputes, disagrees with, or considers such decision unfair, then Contractor shall be free to pursue any other remedy afforded by the laws of the State of Colorado. If Contractor does not dispute the City Engineer's or Procurement Services Manager's decision, ruling, order, or directive or a compromise is reached, then Contractor shall sign Form A.

5. Contractor shall pay the City reasonable attorney's fees and costs associated with its failure to comply with any part of this alternate dispute process.

B. All Other Claims: If a dispute, disagreement, or controversy of any kind, other than those covered in the Unanticipated Circumstances section of this Contract, arises from or is related to the Contract, shall be resolved under the Disputes section in the Contract.

107.29 REMOVAL AND SUSPENSION FOR DEFECTIVE WORK

All work or material which has been rejected shall be remedied or removed and replaced in an acceptable manner. Additional compensation will not be allowed for such removal and replacement. Any work done beyond the lines and grades shown on the drawings, except as herein provided, will be considered as unauthorized and will not be measured or paid for. Work so done may be ordered removed at the Contractor's expense. Should the Contractor fail to comply promptly with any order of the Project Manager made under the provisions of this paragraph, the Project Manager shall have the authority to cause said work to be removed and to deduct the cost from any money due, or to become due, from the Contractor. At any time during the course of construction of this project if the provisions of the Plans, Specifications, or Contract provisions are being violated by the

Contractor or his employees, the Project Manager shall have the right and authority to order all construction to cease or material to be removed, until arrangements satisfactory to the Project Manager are made by the Contractor for resumption of the work in compliance with the provisions of the Contract.

The Contractor shall promptly remove from the premises all materials and work rejected by the Project Manager as failing to meet Contract requirements, whether incorporated in the work or not, and the Contractor shall promptly replace and re-execute Contractor's own work in accordance with the Contract and without expense to the City and shall bear the expense of making good all work of other Contractors destroyed or damaged by such removal or replacement.

All removal and replacement work shall be done at the Contractor's expense. If the Contractor does not take action to remove such rejected work and materials within ten (10) days' time thereafter, the City may, upon ten (10) days written notice, sell such materials at auction or at private sale and retain the proceeds without compensation to the Contractor.

107.30 CLEANING UP AND FINAL INSPECTION

The Contractor shall at the completion of the work, remove all rubbish from and about the work and all tools, equipment, scaffolding, and surplus materials and shall leave the work clean and ready for use. If not completed by Contractor, the City may remove the rubbish and surplus materials and charge the cost to the Contractor.

All sewers, conduits, pipes, and appurtenances and all tanks, pump wells, chambers, buildings, and other structures shall be kept clean during construction and as the work or any part thereof approaches completion, the Contractor shall systematically and thoroughly clean and make any needed repairs to them. Contractor shall furnish at Contractor's own expense, suitable tools and labor for removing all water and cleaning out all dirt, mortar, and foreign substances. Any undue leakage of water into the structures such as to make the work, in the opinion of the Project Manager, fall short of first class work, shall be promptly corrected by the Contractor at Contractor's own expense.

Cleaning and repairs shall be arranged, so far as practicable, to be completed upon finishing the construction work. Notice to begin the final cleaning, and repairing, if such is needed, will be given by the Project Manager, who at the same time will make his final inspection of the work. The Project Manager will not approve the final estimate of any portion of the work until after the final inspection is made and the work is found to be satisfactory.

107.31 CUTTING AND PATCHING

The Contractor shall do all cutting, fitting, or patching of work that may be required to make its several parts fit together or to receive the work of other contractors shown upon, or reasonably implied by the Plans and Specifications for the completed Project.

Cold or wet weather conditions that do not permit a permanent asphalt pavement replacement will require a minimum 2" bituminous pavement patch prior to opening the area to traffic as a temporary measure until the permanent asphalt pavement replacement can be installed. This item shall be incidental to any work requiring such removal of asphalt and will be considered to be included in the unit price of the related item of work.

Any cost caused by defective or ill-timed work shall be borne by the Contractor.

The Contractor shall not endanger any work by cutting, digging, or otherwise and shall not cut or alter the work of any other Contractor without the consent of the Project Manager.

107.32 FINAL TESTS

After completion of the work, the Contractor shall make any and all tests required by the Specifications or by municipal, state, or federal regulations, and where so provided in said regulations shall furnish the City with certificates of inspection by the applicable regulatory bodies. The Contractor shall also make all tests required by the National Board of Fire Underwriters for the purpose of determining insurance rates or other protection of the City or the public.

107.33 CORRECTION OF WORK AFTER FINAL PAYMENT

Neither the final payment nor any provision in the Contract Documents shall relieve the Contractor of the responsibility for negligence or faulty materials or workmanship within the extent and periods provided by law and by this Contract.

107.34 NO WAIVER OF LEGAL RIGHTS

Upon written notice that the Contractor considers all work complete, the Project Manager will make a pre-final inspection with the Contractor and will notify the Contractor in writing of incomplete or defective work revealed by the inspection. The Contractor shall promptly remedy such deficiencies.

After the Contractor has remedied all deficiencies to the satisfaction of the Project Manager and delivered all construction records including record drawings, maintenance and operating instructions, schedules, guarantees, bonds, certificates of inspection and other documents (all as required by the Contract Documents), the Contractor will be promptly issued a Certificate of Completion by the Project Manager stating that the work is acceptable.

Upon completion of the Contract, the City will make final inspection and notify the Contractor of acceptance. Final acceptance shall not preclude the City from correcting any measurement, estimate, or certificate made before or after completion of the Contract, nor from recovering from the Contractor or Surety, or both, overpayments sustained because the Contractor failed to fulfill the obligations under the Contract.

The Contractor shall be liable to the City for latent defects, fraud, or such mistakes as may amount to fraud, or as regards the City's rights under any warranty or guarantee.

For all non-federally funded projects, the following additional requirements shall apply:

(a) All work shall be constructed in compliance with standard construction codes, and all materials and workmanship must be guaranteed for a period of two years from the date of final acceptance. If any defect in the work in violation of the foregoing warranty arises, Contractor shall, upon receipt of written notice of such defect, promptly furnish, at no cost to the City, design and engineering, labor, equipment, and materials necessary to correct such defect and cause the Work to comply fully with the foregoing warranty and Contract Documents. This obligation shall survive both final completion of and final payment for the Work. The City shall not be invoiced for any of costs of warranty work, and Contractor shall not be entitled to submit any claim for an increased fee arising therefrom. The Contractor guarantee period (two-year warranty period) will not begin until the Contract is 100 percent complete, as determined by the Project Manager. Acceptance of the 100 percent complete work shall be requested in writing by the Contractor. Any item requiring repair and/or replacement prior to expiration of the two-year warranty period shall be guaranteed for a period of one-year after the date of said correction or repair or for the remainder of the two-year warranty period, whichever is longer.

(b) In placing orders for equipment, the Contractor shall purchase such equipment only under a written guarantee from the respective manufacturers that the equipment supplied will function satisfactorily as an integral part of the completed Project in accordance with the Plans and Specifications. Furthermore, the Contractor shall require that the manufacturer agree in writing at the time an order of equipment is placed that manufacturer will be responsible for the proper functioning of the equipment in cooperation with the Contractor, and that whenever necessary during the installation period or tuning up period following construction period, the manufacturer will supply without additional cost to the City, such superintendence and mechanical labor and any adjustments and additional parts and labor needed to make the equipment function satisfactorily, even if the same was not shown on approved shop drawings.

107.35 ACCEPTANCE

(a) Partial Acceptance. If, during the performance of the project, the Contractor satisfactorily completes a unit or portion of the Project, such as a structure, an interchange, or a section of road or pavement that can be used advantageously for traffic,

the Project Manager may make final inspection of that unit. If the Project Manager finds that the unit has been satisfactorily completed in compliance with the Contract, the Contractor may be relieved of further responsibility for that unit except as otherwise provided in these general provisions. Partial acceptance shall not void or alter any of the terms of the Contract.

(b) Final Acceptance. Upon notice from the Contractor of presumptive completion of the entire Project, the Project Manager will make an inspection. If the work provided for by the Contract has been satisfactorily completed, that inspection shall constitute the final inspection and the Project Manager will notify the Contractor in writing of final acceptance indicating the date on which the Project was inspected and accepted.

If the inspection discloses any unsatisfactory work, the Project Manager will give the Contractor a written list of the work needing correction. Upon correction of the work, another inspection will be made. If the work has been satisfactorily completed, the Project Manager will notify the Contractor in writing of the date of final inspection and acceptance. Final acceptance under this subsection does not waive any legal rights contained in the No Waiver of Legal Rights section of this Contract.

SECTION 108 – PAYMENTS AND ACCEPTANCE OF WORK

108.00 PAYMENTS AND RETAINAGE

Payments will be made, and required retainage withheld if applicable, in accordance with this section as the work progresses at the end of each month or as soon thereafter as practicable in compliance with C.R.S. Title 24, Article 91, on statements made and approved by the Project Manager. In preparing statements, only completed work will be taken into consideration. No payment will be made for materials in storage and/or delivered to the site, unless otherwise approved by the City.

Payment for work performed by the Contractor under the Contract Documents will be made at the approved unit price or lump sum price for each of the several items as listed in the proposal and measured as hereinafter specified. Such payment shall compensate the Contractor for all costs in connection with furnishing all labor, equipment and material required and performing the operations necessary to complete the item in accordance with the Contract Documents. All incidental work essential to the completion of the Project in a workmanlike manner, and including cleanup and disposal of waste or surplus material, shall be accomplished by the Contractor without additional cost to the City. The cleanup and disposal of waste or surplus material shall be performed during construction or as soon after as is reasonably possible in order to better maintain the aesthetics and safety of the construction area. Payment will be made for the actual quantities constructed or installed, unless otherwise noted in these Contract Documents. However, any changes to plan quantity must be approved through proper Change Order procedures, said quantities being measured as specified in the Contract Documents.

(1) If the Contract exceeds one hundred fifty thousand dollars ($150,000.00), and is for the construction, alteration, or repair of any highway, public work, or public improvement, structure, and the Contractor has provided Performance and Payment Bonds: the City shall authorize partial progress payments of the amount due under this Contract monthly, or as soon thereafter as practicable, to the Contractor, if the Contractor is satisfactorily performing the Contract. If the City finds that satisfactory progress is being achieved during any period for which progress is to be made, the City may authorize payment to be made in full without withholding retainage. However, if satisfactory progress has not been made, the City may retain a maximum of ten percent (10%) of the amount of the requested payment until satisfactory progress is achieved. When the work is substantially complete, the City may retain from the remaining unpaid balance that amount the City Procurement Services Manager, at the advice of the Project Manager, considers adequate for protection of the City, suppliers, subcontractors, laborers, vendors, etc., provided that such retainage shall not exceed five percent (5%) of the amount due, and shall release to the Contractor all the remaining funds associated with completed and acceptable work.

If satisfactory progress has not been made the withheld percentage of the Contract price of any such work, improvement, or construction shall be retained on an invoice-to-invoice

basis and shall not be cumulative. In other words, if the Contractor is not performing satisfactorily the City will hold ten percent (10%) of what is actually due to the Contractor. For example, if the Contractor is behind schedule and has successfully completed fifty percent (50%) of the work, the City will only pay forty percent (40%) of the invoice, withholding ten percent (10%) of what is due until the Contractor gets back on schedule.

(2) Whenever a Contractor receives payment pursuant to this section, the Contractor shall make payments to each of the subcontractors of any amount actually received which were included in the Contractor's request for payment to the City for such subcontracts. The Contractor shall make such payments within seven (7) Calendar Days of receipt of payments from the City in the same manner as the City is required to pay the Contractor under this section if the subcontractor is satisfactorily performing under the Contract with the Contractor. The subcontractor shall pay all suppliers, sub-subcontractors, laborers, and any other persons who provide goods, materials, labor, or equipment to the subcontractor any amounts actually received which were included in the subcontractor's request for payment to the Contractor for such persons, in the same manner set forth in this subsection (2) regarding payments by the Contractor to the subcontractor. If the subcontractor fails to make such payments in the required manner, the subcontractor shall pay those suppliers, sub-subcontractors, and laborers interest in the same manner set forth in this subsection (2) regarding payments by the Contractor to the subcontractor.

At the time a subcontractor submits a request for payment to the Contractor, the subcontractor shall also submit to the Contractor a list of the subcontractor's suppliers, sub-subcontractors and laborers. The Contractor shall be relieved of the requirements of this subsection (2) regarding payment in seven (7) days and interest payment until the subcontractor submits such list. If the Contractor fails to make timely payments to the subcontractor as required by this section, the Contractor shall pay the subcontractor interest as specified by Contract or at the rate of fifteen percent (15%) per annum, whichever is higher, on the amount of the payment which was not made in a timely manner. The interest shall accrue for the period from the required payment date to the date on which payment is made. Nothing in this subsection (2) shall be construed to affect the retention provisions of any Contract.

(3) If the Contractor is not progressing in accordance with the Project Schedule or not performing quality work in accordance with the specifications, the City Procurement Services Manager, at the advice of the Project Manager may withholding retainage up to and including ten percent (10%) of the total contract amount.

108.01 PAYMENTS WITHHELD PRIOR TO FINAL ACCEPTANCE

The City may withhold or nullify the whole or part of any certificate of payment to such extent as may be necessary to protect it from loss caused by:

(a) Defective work not remedied.

(b) Claims filed or reasonable evidence indicating probable filing of claims by other parties against the Contractor.

(c) Failure of the Contractor to make payments properly to subcontractors or for material or labor.

(d) Damage to another contractor.

When the above grounds are removed, payment will be made for amounts withheld because of them.

108.02 ACCEPTANCE OF FINAL PAYMENT

If the work is finally accepted by Project Manager under the terms and conditions of the Contract the entire balance found by the Project Manager to be due the Contractor, including the retained percentage, less any retention based on; (1) the Project Manager's estimate of the fair value of the claims against the Contractor; and (2) the cost of completing the incomplete or unsatisfactory items of work with specified amounts for each incomplete or defective item of work; and (3) retentions required by law, shall be due and payable to the Contractor. The date of completion is the date as specified in the Certificate of Completion issued by the Project Manager.

Upon completion of the work under the Contract and before the Contractor will receive or be paid for the Project Manager's final statement, the City Procurement Services Division shall post a notice in the Colorado Springs Gazette that the City has accepted such work as completed according to the Plans and Specifications and rules set forth in the Contract; that the Contractor is entitled to final settlement; that after the date specified in the Notice, the City will pay the full balance due under the Contract; and that persons having claims for labor or material furnished the Contractor must present their claim to the City Procurement Services Division prior to the date specified for such payment. Nothing herein shall be construed as relieving the Contractor and the Sureties on the Contractor's bonds from any claim or claims for work or labor done or materials or supplies furnished in the execution of the Contract.

The making and acceptance of the final payment shall constitute a waiver of all claims by the Contractor against the City.

If, after the work has been substantially completed, full completion thereof is materially delayed through no fault of the Contractor, and the Project Manager so certifies, the City may, upon Certificate of Completion by the Project Manager, and without terminating the Contract, make payment of the balance due for that portion of the work fully completed and accepted. Such payment shall be made under the terms and conditions governing final payment, and acceptance of the payment shall constitute a waiver of all claims by the Contractor but acceptance of the work shall not constitute a waiver of City claims against the Contractor.

Advertising for Final Payment and processing of the Final Pay Request shall not take place until after the Contractor has submitted Sales and Use Tax Forms to the City and said forms have been reviewed and approved by the City Sales Tax Office.

COLORADO SPRINGS

SCHEDULE C

Special Construction Terms and Conditions

TABLE OF CONTENTS

C.1 DESCRIPTION OF WORK C-4
C.2 SAFETY C-5
C.3 PROGRESS AND COMPLETION C-5
C.4 DRAINAGE AND EROSION CONTROL C-6
C.5 CONCRETE WASHOUT CONTAINERS C-7
C.6 CONCRETE CONSTRUCTION REQUIREMENTS C-8
C.6.1 MIX DESIGN APPROVAL C-8
C.6.2 FORMWORK AND FINISH C-8
C.6.3 PROTECTION OF WORK C-9
C.7 PEDESTRIAN CURB RAMP CONSTRUCTION C-9
C.8 COLD WEATHER PROTECTION C-10
C.9 WORK IN BAD WEATHER C-11
C.10 CONCRETE FORM INSPECTIONS C-11
C.11 WORK AREA AND RESTORATION C-11
C.12 ASPHALT PAVEMENT REPAIRS (PATCHING) C-12
C.13 REMOVAL AND DISPOSAL OF EXISTING ELEMENTS C-13
C.14 REMOVAL AND REPLACEMENT OF SPRINKLER SYSTEM C-13
C.15 PROTECTING AND REMOVING PLANTINGS C-13
C.16 SOIL CONDITIONS C-14
C.17 CONTRACTOR SUBMITTALS C-14
C.18 POTENTIAL PERMITS C-15
C.19 UTILITIES C-16
C.20 COORDINATION WITH PROPERTY OWNERS AND PUBLIC C-18
C.21 COORDINATION WITH ADJACENT PROJECTS C-19
C.22 POSTING AND NOTIFICATION C-19
C.22.1 NO PARKING NOTIFICATION C-19
C.22.2 WRITTEN NOTIFICATION C-19
C.22.3 NOTIFICATION LOG C-20
C.22.4 CONTACT PHONE NUMBER C-20
C.22.5 PUBLIC ACCOMODATION C-20
C.22.6 2C PROGRAM SIGNAGE C-20
C.23 SANITARY FACILITIES C-21

C.24 CONSTRUCTION TRAFFIC CONTROL C-21
C.24.1 TRAFFIC CONTROL PLANS AND PERMITS C-21
C.24.2 TRAFFIC CONTROL SUPERVISOR C-22
C.24.3 FLAGGING C-22
C.24.4 ACCESS REQUIREMENTS C-23
C.24.5 PORTABLE MESSAGE SIGN PANEL C-23
C.24.6 STRIPING C-23
C.25 PEDESTRIAN TRAFFIC CONTROL C-23
C.26 CONSTRUCTION WORK HOURS C-23
C.27 TESTING OF MATERIALS C-25
C.28 WORKPLACE VIOLENCE C-25
C.29 INVOICE PROCEDURES C-25
C.30 UTILITIES TEST STATION DAMAGE FINE C-26
C.31 EXISTING SURVEY MARKER PROTECTION C-26
C.32 CONTRACTOR STAMP C-26
C.33 FORCE ACCOUNT / MINOR WORK REVISIONS C-27

This section contains Special Construction Terms and Conditions (Special Provisions) that are applicable on the project. In the event the terminology of the Special Provisions listed herein conflicts with the terminology in the "CITY OF COLORADO SPRINGS ENGINEERING DIVISION STANDARD SPECIFICATIONS", latest edition, the Special Provisions listed herein will take precedence.

Failure to comply with the following specifications will result in a no-cost, immediate work stoppage, with no additional time allowance granted. No work shall take place until the work stoppage is lifted.

C.1 DESCRIPTION OF WORK

The work to be done by the Contractor shall consist of but is not necessarily limited to:

- Removal and replacement of:
  - sidewalks
  - street crosspans
  - pedestrian curb ramps
  - curb and gutter
  - driveways
  - stormwater inlets
  - patterned concrete cover
  - minor drainage structures
  - pedestrian signal push buttons
  - asphalt patching
- Protection or replacement of:
  - fencing
  - retaining walls
  - landscaping
- Removal of obstructions
- Minor utility relocation and/or adjustment
- Grading, soil scarification, moisture control, backfill and compaction
- Plantings
- Disposal of surplus or waste materials
- Stormwater and erosion control management
- Temporary traffic control

This work shall include restoration of all areas disturbed by construction activities to a condition equal to or better than the pre-construction condition. The Contractor shall obtain all permits and furnish all transportation, materials, tools, equipment, labor and supplies as necessary to complete in a competent manner the improvements as shown and specified in these documents.

Work required to construct items in this contract shall be performed in a safe, careful, and orderly manner with due consideration given to protection of adjoining property, the public, and project personnel. Any damage to streets, utilities, public or private property,

or the bench marks and construction staking due to the negligence of the Contractor, shall be repaired and restored to its original condition by the Contractor at their expense to the satisfaction of the City Public Works Operations and Maintenance Division Program Supervisor (Project Manager). It will be the Contractor's responsibility to ensure that areas not in conflict with new work are not disturbed or damaged during the construction process.

Excavation will not be paid for separately but shall be included in the unit price of the work unless otherwise stated.

C.2 SAFETY

At a minimum, Contractor shall adhere to the City's *Contractor Safety Program.* Contractor shall submit a safety plan to the Project Manager annually for approval prior to starting work.

Contractor is responsible for safety on the job site including compliance with Occupational Safety and Health Administration (OSHA) requirements applicable to the work. The City will be held harmless of Contractor negligence in matters of safety in the work area.

Minimum Personal Protective Equipment (PPE) to be worn by all project personnel include hardhat, clean reflective safety vests (Class II minimum), safety-toe footwear, eye protection (per OHSA), and hearing protection (per OSHA).

Metal stakes used to support concrete forms shall be protected with safety caps designed to provide impalement protection such as those containing steel reinforcement. "Mushroom style" caps are not acceptable. Caps shall be in place any time there is not active work in the area and at the end of the workday.

Contractor shall adhere to all state and local requirements regarding the COVID-19 health pandemic including but not limited to social distancing, face coverings, hygiene, and cleanliness. Reference current governing orders for requirements.

C.3 PROGRESS AND COMPLETION

The work shall commence after the issuance of the Notice to Proceed for each task order as agreed to by the Project Manager and the Contractor.

Contractor shall be required to submit a schedule for completion of all assigned work and attend a bi-weekly contractor meeting at the City's Operations and Maintenance Division (O&M) Facility located at 688 Geiger Court in Colorado Springs, or virtually as directed by the Project Manager. At these meetings, the Contractor shall provide a written schedule update indicating areas of work planned, identified by street for the following fourteen (14) days and overall project status.

The Contractor shall submit a list of streets where work will be performed to the Project Manager for review and approval on a weekly basis prior to starting work in these areas. This list shall be submitted one (1) week in advance of work to be performed.

Additional work assignments will not be awarded if work progress is behind schedule in prior work areas; or Contractor has not demonstrated that they have available crews, equipment, etc. to successfully complete additional work in the specified time frame; or Contractor has not demonstrated the ability to complete the work in a timely fashion while meeting specifications. The Contractor shall keep the Project Manager informed of their ability to accept additional work assignments.

If the Contractor feels they cannot start and finish work within the task order period of performance requirements, they should not accept the task order. If a Contractor is not performing within the task order period of performance, the City reserves the right to assign any unfinished work to another Contractor, as deemed necessary, to maintain the overall program production schedules.

C.4 DRAINAGE AND EROSION CONTROL

It is the Contractor's responsibility to maintain necessary protective measures in compliance with the City Drainage Criteria Manual (DCM), Stormwater Policy Clarifications, and Stormwater Construction Manual. Illicit discharges to the MS4 (Municipal Separate Storm Sewer System) are prohibited unless permitted through the Colorado Discharge Permitting System. Contractor shall obtain a copy of and follow the stipulations of the City MS4 permit, City DCM, Stormwater Policy Clarifications, and Stormwater Construction Manual. All these items can be downloaded from the City's Stormwater Enterprise website located here:

https://coloradosprings.gov/stormwater?mlid=35686

Contractor shall be responsible for obtaining all state and local storm water discharge permits for the work as required.

The Contractor shall provide for the drainage of storm water and water as may be applied or discharged on the site in performance of the work in accordance with the City DCM and Stormwater Construction Manual. Drainage and construction control measures shall be adequate to prevent damage to the work, the site, and adjacent property. Any damage done during storm flows or snow melt to temporary or partially completed work or resulting from the Contractor's operations shall be repaired at the Contractor's expense.

The Contractor shall prevent the pollution of drains and watercourses by sanitary waste, sediment, debris, concrete washouts, sawcutting discharge, or other substances resulting from this work using approved construction control measures. Contractor shall clean up and isolate such materials on a continuing basis to prevent risk of washing into drainage ways. Contractor is responsible for routine maintenance of all construction control measures.

Installation and maintenance of proper construction control measures and work methods to ensure compliance with the City MS4 permit and the City DCM shall be incidental to the work and not be paid for separately except for bid items defined in the Measurement and Payment Contract Schedule.

If any work area is deemed to be in violation of the City's MS4 permit or City DCM, all work shall be stopped at the discretion of the Inspector or Project Manager and the Contractor shall take all necessary measures to bring the site within compliance immediately at no additional cost to the City. Any work performed by the Contractor when violations of the City MS4 permit or City DCM are present anywhere within the total work limits will not be paid for by the City.

The City's Stormwater Enterprise may perform routine inspections of the project at any time. Violations or Illicit Discharges noted by the City Stormwater Enterprise Inspector shall be addressed immediately, with no project work being performed, until all violations have been sufficiently addressed to the City's Stormwater Enterprise Inspector's approval.

C.5 CONCRETE WASHOUT CONTAINERS

Concrete washout containers shall consist of a prefabricated (steel) watertight multi-use container designed to contain liquid concrete washout wastewater, solid residual concrete waste from washout operations, and residue from saw cutting. Minimum capacity including freeboard shall be 440 gallons.

Concrete waste, liquid and solid, shall not exceed two-thirds (2/3) the storage capacity of the washout container. Capacity should be checked daily, especially during and immediately following storm events to prevent overflow. No concrete work shall be performed by the Contractor if the concrete washout/s are at capacity requiring maintenance. Material that inadvertently spills onto the ground shall immediately be cleaned from the surface and disposed of properly.

Concrete washout containers cannot be moved when they contain liquid unless they have been covered using a water-tight manufactured lid or during routine maintenance. All liquid and solid wastes, including contaminated sediment and soils generated from concrete washout shall be hauled away from the site in a water-tight container and disposed of off-site in an appropriate manner.

Concrete washout containers placed on the street require secondary containment consisting of an impermeable synthetic liner (thick plastic, tarp) beneath the entire container and perimeter control (rock socks) extending at least fifteen (15) feet to the downstream side of the washout container.

Conspicuous signage made of plywood, aluminum, or steel shall be placed at the washout using letters at least three inches (3) inches tall with the words "Concrete Washout."

C.6 CONCRETE CONSTRUCTION REQUIREMENTS

C.6.1 MIX DESIGN APPROVAL

All concrete and controlled low strength materials (CLSM) mix designs shall be approved in writing by the City Construction Manager prior to use on the project. Approved concrete mix designs can be found on the City's website under *Engineering Criteria Manuals & References*. It is the Contractor's responsibility to ensure concrete and CLSM delivered to the project are approved mixes. Any work performed using concrete or CLSM mixes not approved at the time of placement will not be paid and shall be removed at the Contractor's expense. Any loads of concrete delivered with missing batch mix data printed on the delivery ticket will be rejected and will not be paid for.

C.6.2 FORMWORK AND FINISH

Curb faces shall be constructed with forms and never hand-poured or hand-formed. Stakes shall be removed after completing the pour, including portions of the stakes that break off below the finished surface. Curb faces, top of curb and back of curb faces shall be straight and true. Any deviations in these alignments greater than three-eighths (3/8) inch in ten (10) feet will be removed and replaced at the Contractor's expense.

Curb and gutter shall be poured separately from sidewalks, pedestrian ramps, and driveways to create a cold joint. Curb and gutter shall be poured monolithically with squared returns and/or crosspans.

Steel reinforcement, when required, shall be properly tied off to forms or placed on chairs. Concrete dobies are not allowed. Reinforcement shall not be wet set or pressed into plastic concrete but shall be formed and tied off properly prior to placement of concrete. Minimum cover on all reinforcement shall be 2 inches.

Finishing agents can only be applied with the use of a pressurized can with sprayer attachment which atomizes the product into a fine spray or mist. Contractor shall not apply the agent to concrete surfaces using a hose or by "blessing" the concrete surface with the use of "flicking a brush" or "spraying from a water bottle". Water shall not be added to the surface of concrete to assist in finishing operations. If concrete surfaces are treated inappropriately as described above, this concrete shall be removed and replaced at the Contractor's expense.

Concrete surfaces shall have a smooth broom finish (less than 1/32" grooves) applied within a straight, uniform technique. Surfaces with a grooved finish deeper than one-thirty-second (1/32) inch shall be removed and replaced at the Contractor's expense.

Construction tool joints in flatwork shall be one-eighth (1/8) inch wide and one-quarter (1/4) of the flatwork depth. These joints are to be either hand-tooled while still wet, or saw-cut as soon as possible after initial set, but no more than two hours after initial set. If shims are used to keep curb head forms separated during concrete placement operations, these shims must be removed and never allowed to be lost in the concrete pour.

White-colored curing compounds shall be applied immediately after surface water has disappeared, or as otherwise recommended by the manufacturer. White-colored curing compound shall completely cover 100 percent of all exposed surfaces creating a uniformly sealed surface.

C.6.3 PROTECTION OF WORK

Concrete shall achieve a minimum compressive strength of 3,200 psi determined by information cylinders prior to opening to traffic or placing adjacent asphalt patching. In no case shall traffic be allowed across new concrete prior to a minimum of forty-eight (48) hours after placement of said concrete. Informational cylinders shall be cast and cured in a field environment prior to compression strength testing. This compressive strength testing will be included in the Quality Assurance program.

All concrete, prior to completion of the final punchlist for the segment, shall be protected from foreign markings or graffiti. Examples include, but are not limited to scrapes, writings, bike tires, foot traffic, and any heavy object that would create an imperfection. In the event of foreign markings or graffiti the replacement or repairs shall be made by the Contractor at no additional cost unless otherwise determined by the Project Manager.

Work that deviates from the Contract will require removal and replacement of affected work, as determined by the Inspector. No additional payment shall be made for this replacement work.

C.7 PEDESTRIAN CURB RAMP CONSTRUCTION

The Contractor is responsible for understanding and adhering to City requirements for construction of pedestrian curb ramps. The Contractor shall always have hard copies of the City Standard Drawing D-8 on the project site for reference.

The Contractor shall use a smart level two (2) foot in length throughout construction of pedestrian curb ramps to confirm slopes are compliant with City Standard Drawing D-8. Prior to acceptance for payment, the Inspector will use a two (2) foot smart level to verify all slope measurements. Smart levels shall be calibrated regularly and shall be used in percentage mode. In the event of discrepancy between the Contractor and Inspector smart level measurements, the Inspector's smart level measurements shall take precedence.

The entirety of the walkable concrete surface including but not limited to the ramp, turning space, curb head at the base of the ramp and gutters shall be compliant with maximum slopes shown on City Standard Drawing D-8 with zero tolerance. The Contractor is encouraged to construct slopes less steep than the requirements to increase likelihood that finished slopes will be acceptable. Surfaces found to be non-compliant shall be removed and replaced at the Contractor's expense.

If the Contractor believes it is not feasible to construct curb ramps with slopes that meet the requirements of City Standard Drawing D-8 due to existing site conditions such as existing steep running slopes, the Contractor shall notify the Inspector. Any work performed under the assumption that an exception to the requirements of City Standard Drawing D-8 will be granted is done at the risk of the Contractor.

C.8 COLD WEATHER PROTECTION

The Contractor is responsible for the strength and quality of concrete placed during cold weather.

Cold Weather is defined by ACI 306 as a period of more than three successive days where the average daily outdoor temperature drops below 40 degrees Fahrenheit (F). The average daily temperature is determined by averaging the highest and lowest temperature during the day (midnight to midnight).

Subgrade shall be unfrozen (above 32 degrees F), free of snow, ice, and standing water before placement. Metal form work shall not be less than 35 degrees F.

During periods of cold weather, the Contractor shall provide additional controls for concrete placement. The Contractor shall submit a Cold Weather Concrete Plan (Plan) to include the following:

1) Procedure for protecting the subgrade from freezing, frost, and accumulation of ice and/or snow on forms and reinforcement.
2) Concrete production and transportation modifications.
3) Method for maintaining and monitoring temperature during placement and curing.
4) Types of coverings, insulation, housing, and/or heating to be provided.
5) Procedure for measuring, recording, and reporting, to the City, concrete temperatures during production and curing.
6) Procedure for preventing drying during windy conditions.

The Plan shall be submitted to and approved by the Project Manager prior to placing concrete in Cold Weather as defined above. This Plan shall be provided once per season prior to temperatures dropping into the Cold Weather range. Any concrete placed in Cold Weather conditions prior to the Plan being submitted and approved shall be removed and replaced at the Contractor's expense regardless of compressive strength testing results.

Minimum temperature of concrete as placed and maintained during the production period shall be fifty (50) degrees F. The concrete surfaces will be enclosed and heated with artificial heat maintaining a minimum of fifty (50) degrees F and a maximum of 75 degrees F until concrete has reached a compressive strength of 3,200 psi, based on maturity method or the average of two field cure cylinders. At no time shall concrete be placed when the ambient temperature at the work area is below 32 degrees F.

Cold weather protection required to perform work shall not be paid for separately but shall be included in the unit price of the work being performed.

C.9 WORK IN BAD WEATHER

The Project Manager shall have the authority to suspend the work wholly or in part that may be subject to damage in the Project Manager's opinion due to climactic conditions, for such period as he may deem necessary. This shall not entitle the Contractor to additional compensation for down time or delay. The Project Manager will make every effort to provide as much notice as possible in anticipation of work stoppages due to climactic conditions.

C.10 CONCRETE FORM INSPECTIONS

The City requires a Concrete Form Inspection prior to placing concrete to help ensure proper line and grade of new work. This in no way relieves the Contractor of responsibility to construct work in accordance with the Contract Documents. It is the Contractor's responsibility to complete required work and to schedule inspections during normal working hours Monday through Friday and not on holidays. The Contractor shall submit a request to the Project Manager at least 48 hours in advance of any work outside these times including weekends, holidays, and nights. There is no guarantee that an Inspector will be available for the day(s) requested or that the request will be approved. Work shall only proceed if an Inspector is present.

The City will not entertain any requests for time extensions for delays caused by the Contractor's failure to properly notify the Inspector of a required inspection or the Contractor's failure to complete the required work by the time of the scheduled inspection. It is the Contractor's responsibility to adhere to the grade and line requirements set forth in the Contract Documents for all concrete installations. Inspection and approval of form work shall not relieve the Contractor from achieving these requirements. The Contractor shall be responsible for removing and replacing any work installed not meeting required line, grade, and specifications as determined by the Inspector. There will be no additional payment for this removal and replacement work.

C.11 WORK AREA AND RESTORATION

The Contractor shall confine the work activities to the public right of way. Any additional work area required within adjoining private properties must be acquired by the Contractor by written permission from the property owner. The Contractor shall restore any damage or disruption to other properties utilized in the performance of this project to an equal or

better than pre-construction condition at no cost to the City. The Contractor shall hold the City harmless from any claims to damage or disruption of private property.

Contractor personnel shall not enter upon private property without written consent of the landowner. The Contractor shall provide the Project Manager with a copy of the written permission. The City will be held harmless of Contractor negligence in matters of trespassing.

The Contractor shall limit their work activities such that at no time shall any removal and/or construction activities occur simultaneously on opposite sides of a street in any given block unless explicitly approved by the Project Manager.

Upon completion of the work on a given street or street segment, the Contractor shall remove and completely dispose of all refuse materials, dirt, etc., to leave the street in a neat and clean condition. After completing concrete operations, all sidewalks, driveways, and other hard surfaces affected by the work shall be hand swept and/or air blown using a leaf blower. This work shall not be paid for separately but shall be included in the unit price of work being performed. All excess materials shall be disposed of by approved means and complying with all local, state, and federal codes, ordinances and laws.

The City regards professional organization, cleanliness, and appearance of the work site of utmost importance. The Contractor shall accomplish all incidental work essential to the completion of the project in a competent manner, including cleanup and disposal of waste or surplus material without additional cost to the City. The cleanup and disposal of waste, trash or surplus material shall be performed every day to maintain the safety and aesthetics of the construction area.

All site restoration including, but not limited to, grading, seeding, sodding, replacing sprinkler lines and heads, and replacing landscape rock up to two (2) feet outside the limits of work shall be incidental to the work. Restoration outside the two (2) foot limit shall be at the Contractor's expense unless the Project Manager has directed additional work to be performed.

C.12 ASPHALT PAVEMENT REPAIRS (PATCHING)

Reference City Standard Drawing D-3 and the *Pikes Peak Region Asphalt Paving Specifications* for requirements of asphalt pavement repair adjacent to new concrete. Asphalt patching material shall have a minimum surface temperature of 235 degrees F when delivered and 190 degrees F after the compaction process is completed. Asphalt patching materials below this temperature shall be removed and replaced at the Contractor's expense. No payment will be made for this rejected material or the work to remove it.

Asphalt patching material shall only be placed when the ambient temperature is forty (40) degrees F or above. Approval for asphalt patching placement at temperatures below forty

(40) degrees F shall only be accomplished in emergency situations and upon written approval of the Project Manager.

Diesel fuel shall not be used as a cleaning/release agent. Violation of this provision will result in Contractor discipline up to and including termination of the Contract.

C.13 REMOVAL AND DISPOSAL OF EXISTING ELEMENTS

The Contractor shall remove from the project site all materials that conflict with or are not needed in the finished product including but not limited to existing sidewalks, curb and gutter, asphalt pavement, concrete rubble, landscape timbers and elements, abandoned utilities, trees, fencing, stumps, unsuitable backfill material and other debris.

The Contractor shall use appropriately designed and sized equipment to remove and haul disposal materials, to maintain safe conditions for the public and nearby properties.

Disposed materials shall be hauled to a legal disposal site. The Contractor shall abide by all federal, state, and local government requirements for hauling and disposal of materials.

C.14 REMOVAL AND REPLACEMENT OF SPRINKLER SYSTEM

Where required by the work, existing sprinkler heads and related fittings and tubing shall be removed and replaced as close as possible to the original locations. All sprinkler heads and fittings shall be salvaged and reused unless damaged. It is the Contractor's responsibility to coordinate with the property owner to determine the pre-construction condition of the system. Damaged items shall be replaced with the same type and quality, or better, as the original item. After assembly, the sprinkler system shall be tested for leakage and proper operation. The system shall be drained after testing if work is performed beyond the irrigation season. This work shall not be paid for separately but shall be included in the unit price of the work being performed.

C.15 PROTECTING AND REMOVING PLANTINGS

The Contractor shall protect all existing trees, shrubs, sod, and other plantings from root structure or surface damage. Prior to performing any tree trimming or removal operations the Contractor shall notify the City Forester's office at (719) 385-5942. Unnecessary damage to plants or trees will subject the Contractor to full replacement of those plantings at the Contractor's expense as determined by the Project Manager. In all cases, the proper planting season shall be observed to assure proper establishment and growth of the plantings.

Where plantings are in conflict with new work, as determined by the City Forester (plantings in the public right-of-way) or Inspector or owner (plantings on private property), the Contractor shall remove the planting using a locally licensed tree trimming service approved by the Project Manager to perform this work as necessary. Tree branches shall

be trimmed back to the trunk, all around, to a minimum height of 8' above the adjacent walkway.

At the discretion of the Project Manager, and upon approval of request by the Contractor, the City will remove conflicting trees and plantings with trunk caliper 4-inches or larger prior to the Contractor beginning work in the area. The cost of these removals will be covered by the City and not the Contractor.

Trimming or removal of vegetation and trees shall not be paid for separately but shall be included in the unit price of work being performed.

C.16 SOIL CONDITIONS

The Contractor assumes all risks associated with surface and subsurface soil conditions encountered in performing the work; including the risk that actual conditions may result in the Contractor performing more or less work than originally estimated. The Contractor is responsible for all exploratory excavations and soil tests.

The Contractor shall utilize all suitable excavated material as approved by the Inspector for raising grades and backfilling the new construction. Additional imported materials necessary for stabilization within the first six (6) inches of depth below the new construction will not be paid for separately but shall be included in the unit price of the work.

If additional import material is required for stabilization beyond six (6) inches in depth, the Contractor shall notify the Inspector and obtain approval prior to proceeding with the additional excavation and backfill. This work will be paid for using contract unit prices for the approved material.

C.17 CONTRACTOR SUBMITTALS

Submittals for design, testing and shop drawings shall be in conformance with Section 108.19 "Shop Drawings and Submittals" and 108.21 "Materials" of the City Standard Specifications. One hard copy and a duplicate electronic copy of submittals (via email) shall be provided to the Project Manager. The Project Manager will review shop drawings and submittals and return comments within seven (7) working days. Failure of the Contractor to deliver submittals in sufficient time for the Project Manager's review shall not constitute a delay on the part of the City. Shop drawings and submittals include at least the items listed below, and any other additional submittals which may be required by the Project Manager:

1. Concrete and Asphalt Mix Designs
2. Joint Sealant Materials
3. Traffic Control Plan
4. Job Hazard Analysis's
5. Pre-Job Safety Briefing

6. Equipment Safety Inspection Sheet
7. Fencing Materials
8. Material Certificates (reinforcing steel, herbicide, expansion material)
9. Topsoil mix
10. Seed mix
11. White Colored Concrete Curing Compound
12. Inlet Grates and Frames

C.18 POTENTIAL PERMITS

The table below is a list of potential permits or submittals required for the project. The Contractor shall verify this list and identify any additional permits needed to construct the project. The Contractor is responsible for obtaining copies of and complying with all permits obtained by others that pertain to this project.

Permit	Permitting Agency	Responsibility to Obtain Permit
Air Quality Permit	El Paso County/ Colorado Department of Public Health and Environment	Contractor
CDPHE Stormwater Construction Permit	Colorado Department of Public Health and Environment	Contractor
Excavation Permit	City of Colorado Springs	Contractor
Concrete Permit	City of Colorado Springs	Contractor
City Forester's Permit	City of Colorado Springs	Contractor
Traffic Control Permit	City of Colorado Springs	Contractor
Grading and Erosion Stormwater Quality Plan	City of Colorado Springs	Contractor

The Contractor shall be responsible for investigating and assessing the requirements for all necessary environmental/drainage/construction permits. The Contractor shall furnish a written list of all permits required for the proper completion of each work assignment. The list shall clearly identify the type of permits that must be obtained before work on any phase of work can be started. Copies of permits obtained shall be submitted to the Project Manager. The Contractor shall comply with all conditions of the permits during construction. Permit fees for the City of Colorado Springs permits are waived for this project. The Contractor shall pay the fees for all other permits. City and/or other agency fines are the sole responsibility of the Contractor.

All water used shall be potable and free of dissolved ingredients that are harmful to the work as determined by the City. If water is acquired from a fire hydrant, the Contractor shall use a water meter equipped with a backflow preventer as required by Colorado Springs Utilities. The Contractor shall contact and coordinate with Colorado Springs Utilities for direction and approval to use any fire hydrant. The Contractor shall be responsible for any damages to CSU waterlines or CSU customer property related to waterlines. Water shall be included in the contract unit price and shall not be paid for separately.

The excavation permit may be obtained at:

Regional Development Center
2880 International Circle
Suite 200-1
Colorado Springs, CO. 80910
Contact: Robin Tisdale
(719) 385-5052

C.19 UTILITIES

The Contractor shall be responsible for locating and protecting all utilities. The Contractor shall contact Colorado 811 (UNCC), Colorado Springs Utilities, and all other affected or potentially affected utility companies. It is the responsibility of the Contractor to determine, identify, and coordinate with all affected utilities. At least forty-eight (48) hours prior to commencing excavation, the Contractor shall call UNCC at 1-800-922-1987 or 811 within business hours, Monday through Friday. Tier II locates shall be contacted at least seventy-two (72) business hours prior to commencing excavation. Contacting UNCC within these timeframes does not relieve the Contractor of any responsibility.

All work shall comply with the following Colorado Springs Utilities documents:

- *Water Line Extension and Service Standards*
- *Natural Gas Line Extension and Service Standards*
- *Wastewater Line Extension and Service Standards*
- *Electric Line Extension and Service Standards*

In the event of conflict between these specifications and the CSU *Line Extension and Service Standards* with regard to construction methods, notification requirements, and materials, the *Line Extension and Service Standards* shall take precedence.

All replacement taps shall be coordinated by the Contractor. The Contractor shall notify Colorado Springs Utilities at least twenty-four hours before beginning any work that may affect a Colorado Springs Utilities utility. All overtime costs for inspection by Colorado Springs Utilities shall be the Contractor's expense and included in the cost of the work.

It is the Contractor's responsibility to complete required work and to schedule inspections during normal working hours. The Contractor is responsible for contacting each affected utility for their inspectors' working hours and notification requirements. The Contractor shall request an inspection two (2) working days in advance of the inspection or as required by the utility, whichever is greater. In the case of an overtime inspection, the request for inspection by the Contractor to the utility must be in writing. The City will not entertain any requests for time extensions for delays caused by the Contractor's failure to properly notify the affected utility of a required inspection or the Contractor's failure to complete the required work by the time of the scheduled inspection.

The accuracy of any information furnished with respect to underground utilities is not guaranteed. The Contractor is responsible for making investigations including exploratory excavations to determine the locations and types of existing utility lines prior to starting excavation. These investigations shall not be paid for separately but shall be included in the unit price of the work.

The Contractor shall notify all utility companies who may have installations in the area where the work is to be performed and solicit their aid in locating utilities horizontally and vertically prior to any excavation. All utilities encountered shall be protected from damage or lapse in operation and shall be repaired at the Contractor's expense.

City of Colorado Springs Utilities

Colorado Springs Utilities Electric	(719) 448-4811
Colorado Springs Utilities Water, Wastewater	(719) 448-4200
Traffic Department	(719) 385-5908
Colorado Springs Utilities Gas Emergencies	(719) 520-0100
Cable Television	(719) 633-6616
Telephone	(800) 954-0211
Parks and Recreation	(719) 385-6551

Miscellaneous Utility Services

Utility Notification Center of Colorado (UNCC)	(800) 922-1987 or 811
Engineering Division for Inquiries	(719) 385-5918

Below is a Pre-Excavation Checklist which the Contractor shall follow prior to commencing construction on the project.

Pre-Excavation List

_____ Utility Notification Center of Colorado (UNCC) called at least two (2) business days prior to construction at: 1-800-922-1987 or 811

_____ Utilities marked and located on the ground

_____ Employees briefed and knowledgeable on marking and color codes

_____ Employees trained on excavation and safety procedure for Natural Gas Lines

_____ When excavation approaches gas lines, employees expose lines by careful probing and hand digging

Standard Utility Marking Color Code

Gas	Yellow
Electric	Red
Water	Blue

Wastewater	Green
Communications	Orange
Reclaimed Water	Purple
Proposed Excavation	White
Survey Markings	Pink

The Contractor shall notify the CSU Gas Division prior to any excavation in the vicinity of a gas line. The Gas Division Inspector shall be notified and shall be present on site prior to construction activities around gas lines. The CSU Gas Division will perform all repair and relocation work. Repairs due to damage by the Contractor are the financial responsibility of the Contractor and will not be reimbursed by the City.

The Contractor shall protect existing electric distribution lines and facilities from damage or displacement. The Contractor shall notify and coordinate the work with the CSU Electric Transmission and Distribution Division. The cost of protecting the electrical utility is considered incidental and is to be a part of the adjoining work. The CSU Electric Department will perform any repair or relocation work. Repairs due to damage by the Contractor are the financial responsibility of the Contractor and will not be reimbursed by the City.

The Contractor shall coordinate with all utility customers affected by any utility service shutdown, or with the utility provider if the utility provider prefers to contact customers, at least 48 hours prior to shut down. In the event a customer is involved that cannot be without a utility service due to health and safety or for other reasons deemed essential by the Project Manager, the Contractor shall provide uninterrupted utility service to the property while the shutdown is in effect.

If for any reason when utility service is restored after the shutdown, a customer has not been restored, and Colorado Springs Utilities is contacted to determine the problem, the Contractor shall provide all materials and work necessary at the direction of CSU to restore service immediately, regardless of time of day. The Contractor shall provide Colorado Springs Utilities with a name and telephone number of an after-hours contact in case of emergency.

All utility coordination activities required herein shall be considered incidental to the work and not paid for separately.

C.20 COORDINATION WITH PROPERTY OWNERS AND PUBLIC

The Contractor shall coordinate the relocation of fencing, landscaping, sprinklers, control boxes, utility services, street signs and mail boxes and the salvaging of any materials suitable for reuse with the Inspector and, if on private property, with the respective property owners. Salvageable elements shall be carefully relocated per direction of the Inspector and protected from damage.

The Contractor shall make every effort to minimize inconvenience to the traveling public including bicyclists and pedestrians. The Contractor should expect to receive unsolicited inquiries from adjacent property owners and the public. The Contractor shall respond to all public inquiries in a prompt, professional manner and shall include the Project Manager in all correspondence. The Contractor shall forward any inquiries from media or news organizations to the Project Manager. Any work and materials needed to interact with the public will not be paid separately and shall be included in the cost of the work.

C.21 COORDINATION WITH ADJACENT PROJECTS

The contractor shall coordinate with all concurrent projects in the vicinity of this project managed by public agencies, including but not limited to the City of Colorado Springs, Colorado Springs Utilities, El Paso County, and the Colorado Department of Transportation. Coordination shall include coordination of temporary traffic control to minimize conflict and confusion between overlapping temporary traffic control zones.

C.22 POSTING AND NOTIFICATION

The Contractor shall notify and coordinate the closing and construction of driveways, curb, gutter and sidewalks with the Inspector and the adjoining property owners in advance of work using the following methods:

C.22.1 NO PARKING NOTIFICATION

The Contractor shall be required to place “No Parking” signs as specified by the Manual on Uniform Traffic Control Devices (MUTCD) or the Project Manager a minimum of seventy-two (72) hours prior to the work commencing. These signs shall be preprinted at a sign shop. These signs shall have the City Code 10-11-104 clearly and permanently marked. The specific work dates shall be clearly marked with lettering width of one-eighth (1/8) inch or larger such that the date is clearly legible from a distance greater than twenty-five (25) feet away or as approved by the Project Manager. Dates can be handwritten due to changing dates and times but must be clearly legible from over twenty-five (25) feet away. These signs shall be eighteen (18) inches tall by twelve (12) inches in width. The post to support the “No Parking” sign shall be a minimum of four (4) feet in height. The support may be wood or metal. These signs shall not be mounted on any type of traffic control device. These signs shall be placed on the property line of every third residence (adjacent to the curb where work is to be performed) or a maximum spacing of one hundred fifty (150) feet. The cost of the signs and posts, as well as the placement and removal, shall be included in the work and no additional payment will be made.

C.22.2 WRITTEN NOTIFICATION

The Contractor shall give written notification to the adjacent property owners with a letter notifying them of the process, any special instructions such as parking and watering restrictions and a proposed schedule shall be delivered to the adjacent property owners a minimum of seventy-two (72) hours prior to the work commencing. These letters shall have the appropriate City logo in the header.

C.22.3 NOTIFICATION LOG

The Contractor shall be required to keep a log on all postings of signage and letters given to adjacent property owners and towing of vehicles. The Contractor shall make every reasonable effort to contact the vehicle owner if a vehicle is parked on the street in a location that will conflict with the work. Only after every reasonable effort has been made to contact the vehicle owner will the Contractor be allowed to contact the City of Colorado Springs Police Department to have the vehicle towed. Prior to contacting Police Department for towing of vehicle, the Contractor shall contact the Inspector for verification of the parking violation. Should an Owner of a towed vehicle file a complaint and a court hearing is required, the Contractor shall make available the staff involved in the placement of signage and notifications to attend court to testify regarding towing of vehicles.

C.22.4 CONTACT PHONE NUMBER

The Contractor shall establish a local phone number with a (719) area code or toll free number that will be placed on all “No Parking” signs as well as on all “Notification Letters” issued as part of the Public Notification Process so the Public can call the Contractor direct with any questions or concerns. The cost of this local phone service shall not be paid for separately and shall be included in the unit price of the work being performed.

C.22.5 PUBLIC ACCOMODATION

Every reasonable effort should be made to the public if the Contractor is made aware of special circumstances that conflict with the work including but not limited to: wedding receptions, funeral gatherings, graduation parties, garage sales, sporting events, regional/seasonal events, etc.

C.22.6 2C PROGRAM SIGNAGE

The City will provide temporary signage (approximately two (2) feet by three (3) feet in size per panel) indicating to the public that the work is part of a City Program. These signs shall be mounted and placed at each end of each project site. The Contractor shall be responsible for the prompt placement, relocation and removal of these signs daily. At the end of this contract the Contractor shall return the signs to the City of Colorado Springs Operations and Maintenance Division offices. If City signs are not returned or are returned in unusable condition, a charge of $150.00 per sign will be deducted from the Contractor’s final payment.

All costs associated with posting and notification shall be included in the work. No separate payments shall be made for this work.

C.23 SANITARY FACILITIES

A portable (mobile) toilet shall be supplied at each work site location for the duration of any work at the site. Portable toilets shall be regularly relocated as needed to remain as close as possible to the work crews. This toilet shall be maintained by a professional portable toilet vendor on a weekly basis at a minimum. Sanitary facilities will not be paid for separately but shall be included in the unit prices of the work being performed.

The Contractor shall obtain and ensure compliance with the City's Portable Toilet Details for Construction Sites issued as Policy Clarification to the City DCM. A copy can be obtained on the City's website at the following url:

https://coloradosprings.gov/stormwater-enterprise/page/drainage-criteria-manual?mlid=6291

C.24 CONSTRUCTION TRAFFIC CONTROL

Construction traffic control shall conform to the MUTCD, latest edition and revisions thereto, City of Colorado Springs Supplement to MUTCD for Traffic Control for Street Construction Utility Work and Maintenance Operations.

No roads shall be closed by the Contractor except by express permission of the City Traffic Engineer and after notifying the Police, Fire Departments, and other affected stakeholders.

Barricades, warning signs, lights, and other temporary traffic control devices necessary for detours are the responsibility of the Contractor and shall be paid for by the Contractor. The Contractor shall promptly provide, place, maintain, relocate, and remove devices in such a manner as to minimize inconvenience to the traveling public including bicyclists and pedestrians.

C.24.1 TRAFFIC CONTROL PLANS AND PERMITS

All work areas shall require a Traffic Control Plan (TCP) to be submitted to the City Traffic Engineering Division for review and approval a minimum of ten (10) days prior to starting work to allow for a proper review period. No work shall proceed without an approved TCP. Traffic Control Plans not involving closures or detours can be submitted a minimum of seventy-two (72) hours (three City business days) prior to implementation. Fees for Traffic Control Permits will be waived.

Traffic Control Plans shall include detailed signing, barricading, staging, pedestrian, and traffic detouring information for each phase or stage of construction including as a minimum: type and number of devices, taper length/widths, working hours, number and location of flaggers, uniformed traffic control (if necessary), access modifications, and time restrictions, if any.

The Contractor and Traffic Control Supervisor (TCS) shall always have a hard copy of the approved TCP and Traffic Control Permit on the work site for each location where work is being performed. The TCP and Permit shall always be available for review on the worksite by any City employee or Inspector. If the TCP or Permit is not available or the Permit is inactive, all work shall stop, and all equipment and materials shall be removed from the travelled way at the Contractor's expense.

C.24.2 TRAFFIC CONTROL SUPERVISOR

The Contractor shall always have on the project an American Traffic Safety Service Association (ATSSA or approved equal) certified Traffic Control Supervisor. The Contractor shall supply to the Project Manager the certification, phone number and name of the TCS and flaggers prior to starting any work.

When working in the vicinity of schools, meetings with school staff will be required to assure traffic control concerns of the school staff are met. Hours of work may be more restrictive and additional traffic control measures may be required. This additional work shall be included in the contract unit price. No additional payment will be made for this work.

The Contractor shall maintain a twenty-four (24) hour, seven (7) days a week (including weekends and holidays) emergency service to remove, install, relocate, and maintain traffic control devices. The Contractor shall furnish the Project Manager the name and telephone number of the TCS responsible for emergency service.

In the event the TCS does not respond within two (2) hours, or the City deems it necessary to call out other forces to accomplish emergency services, the Contractor will be held responsible for the cost of such emergency services, without reimbursement.

C.24.3 FLAGGING

All flaggers shall be certified by the ATSSA or approved equivalent. Each flagger shall carry their current flagging certification on the work site. This certification shall be available for review on the project site by any City employee or Inspector. If a flagger's certification is not available or is inactive, all work shall stop, and all equipment and materials shall be removed from the travelled way at the Contractor's expense until a certified flagger can be placed.

Flagging against traffic signals shall not be permitted without the use of a Uniformed Traffic Officer (UTC). A TCS shall not be considered a UTC. If a UTC is utilized, this person shall be assisted by a TCS and flaggers.

C.24.4 ACCESS REQUIREMENTS

The Contractor shall provide for vehicular access to and from all existing accesses abutting the project throughout the course of construction, except when local streets are closed as approved by City Traffic Engineering.

The Contractor shall leave at least one (1) driveway open to any non-residential properties affected by construction.

C.24.5 PORTABLE MESSAGE SIGN PANEL

A Portable Message Sign Panel shall be placed on all arterial roadways in both directions of travel at least ninety-six (96) hours in advance to notify the public of upcoming lane closures or other changes in traffic patterns.

C.24.6 STRIPING

All permanent and temporary traffic markings shall be the responsibility of the City. The Contractor shall coordinate all temporary and permanent traffic marking operations with the City Operations and Maintenance Division a minimum of seventy-two (72) hours prior to starting work in areas where striping will be required. If permanent traffic markings are disturbed during construction, placement of temporary traffic markings shall be the responsibility of the City. The Contractor shall make every reasonable effort to coordinate the removal of permanent markings and placement of temporary markings with the City.

All cost associated with construction traffic control shall be incidental to all work items and shall be included in the work unless otherwise explicitly stated in the Measurement and Payment Contract Schedule.

C.25 PEDESTRIAN TRAFFIC CONTROL

The Contractor shall provide, install, maintain, relocated, and remove pedestrian wayfinding signs as necessary to minimize out-of-direction travel and confusion. It may be necessary to locate these signs far outside the project limits to be effective. The Contractor shall prepare and submit for approval a plan that shows proposed accessible pedestrian routes and pedestrian signage for all phases of construction. Signalized intersections shall always provide protected pedestrian crossings from all pedestrian walkways that are open to pedestrian traffic. Temporary pedestrian walkways and signage is considered incidental to the work and will not be paid for separately.

The surface and width of temporary pedestrian walkways shall be equal to or better than the surface and width of the pedestrian walkway that is temporarily closed.

C.26 CONSTRUCTION WORK HOURS

Working hours on residential and arterial streets shall be limited from 7:30 AM to 4:30 PM Monday through Friday excluding holidays, or as otherwise approved by the Project

Manager and City Traffic Engineering. Work will be allowed on Saturdays, Sundays and holidays only with written permission from the Project Manager.

Work time violations beyond hours referenced above will be assessed as follows:

a. If there is a violation of the working time limitations a written notice to stop work will be imposed on the Contractor at the start of the next working day. Work shall not resume until the Contractor assures the Project Manager, in writing, that there will not be a reoccurrence of the working time violation. If more violations take place, the Project Manager will notify the Contractor in writing that there will be a price reduction charge for each incident in accordance with this provision. This incident price reduction charge will be deducted from money due the Contractor. This price reduction will not be considered a penalty but will be a price reduction for failure to perform the work in compliance with the Contract.

b. An incident is any violation up to thirty (30) minutes in duration. Each thirty (30) minutes or increment thereof will be considered as an incident. A price reduction will be assessed for each subsequent thirty (30) minute period in violation of the working time limitations, as determined by the Project Manager. The price reduction for each incident will increase at a progressive rate starting with $150 for the second incident and increasing to $1,200 for the fifth (5th) and subsequent incidents in accordance with the following schedule. A fifteen (15) minute grace period will be allowed at the beginning of the second (2nd) incident on the project before the price reduction is applied. This fifteen (15) minute grace period applies only to the second (2nd) incident.

c. The number of incident charges will be accumulative throughout the duration of the Contract.

PRICE REDUCTION SCHEDULE		
INCIDENT	INCIDENT RATE	TOTAL PRICE REDUCTION
1st	Notice to Stop Work	$0
2nd	$150	$150
3rd	$300	$450
4th	$600	$1,050
5th	$1,200	$2,250
6th	$1,200	$3,450
Etc…	$1,200	Etc.

C.27 TESTING OF MATERIALS

The term "Quality Control" or "QC" refers to the tests that are conducted by and on behalf of the Contractor. QC is hired and paid by the Contractor or their supplier at their discretion to self-regulate and monitor their work. The term "Quality Assurance" or "QA" refers to the tests that are conducted by and on behalf of the City. QA is hired and paid by the City. The results of QA tests, and not QC tests, shall be used to determine whether the work and materials are compliant with the plans and specifications.

The City will perform QA field testing of plastic concrete properties (air content, unit weight, slump, temperature) at a frequency of one per workday, per street segment, per mix design. The City will perform QA laboratory testing of concrete design strength at a frequency of one per street segment, per mix design. Additional QA field and laboratory tests may be performed by the City at their discretion at any time.

The Inspector may request QA laboratory testing be performed for design strength of concrete placed using fast track additives for reopening of driveways, crosspans, or squared returns when use of fast track additives is proposed by the Contractor.

C.28 WORKPLACE VIOLENCE

If a representative or employee of the Contractor, or a subcontractor, commits an act of workplace violence on the project, the individual shall be sanctioned as provided by the Contractor's employment policies and, where appropriate, shall be reported to law enforcement authorities. At the request of either the Contractor or the City, the City and the Contractor shall meet to discuss appropriate actions to be taken against the representative or employee. Appropriate action may include removing the individual from the project. If removal is deemed warranted by the City and the Contractor fails to remove the representative or employee, the City may suspend the work by written notice until compliance is achieved.

C.29 INVOICE PROCEDURES

Payment for work performed by the Contractor under these Contract Documents will be made at the approved unit price or lump sum price for each of the items listed in the bid proposal and measured as hereinafter specified. Such payment shall compensate the Contractor for all costs in connection with furnishing all labor, equipment, and material required and performing the operations necessary to complete the item in accordance with the contract documents. Field measurements by address or intersection of completed work items shall be done jointly by the Inspector and the Contractor on approved designated forms to ensure prompt agreement. In the event of discrepancy between Inspector and Contractor measurements, the Inspector measurements shall take precedence unless the Project Manager decides otherwise.

Quantities for work performed on any given street segment will be reviewed, approved, and signed off by both a representative of the Contractor familiar with the work and the Inspector. Signature by the Contractor's representative indicates acknowledgement of

the quantity but does not indicate agreement or prevent the Contractor from disputing the quantity. The approved quantities will be collected by the Inspector and turned in to the City administrator on a weekly basis by Friday at 4:00 PM.

Within a maximum of ten (10) business days from receipt of final quantities, the Contractor shall submit an invoice on their letterhead or formally dispute in writing any City Operations & Maintenance Division prepared quantities. After ten (10) business days, if no dispute has been submitted in writing objecting to these quantities, then said quantities shall be final and no future adjustments shall be allowed.

Payment will only be made for that work identified by the Inspector for removal. If additional materials are removed for any reason without written approval by the City, no payment will be made for the removal or replacement of said materials. This additional removal and replacement cost shall be borne by the Contractor including repair of any damage caused during the removal process.

Partial payments of work may be allowed within segments of work requiring phasing if requested by the Contractor and approved by the Project Manager. Without this approval, only completed work will be considered for payment. Completed work is defined as concrete work that has forms stripped, backfill completed, cure applied and asphalt patching complete in place with a completed punchlist.

C.30 UTILITIES TEST STATION DAMAGE FINE

A fine of $500 per occurrence will be assessed to the Contractor for damage to utility test stations requiring repair and/or replacement by Colorado Springs Utilities. The money will be deducted from the final invoice for the phase or segment upon which the damage occurred as determined by the Project Manager.

C.31 EXISTING SURVEY MARKER PROTECTION

The City will provide for reset of survey pins within the work area prior to the Contractor starting work. Should the Contractor discover a survey mark or pin within the work area, the Inspector shall be notified immediately to determine if the pin needs to be temporarily reset. The Contractor shall protect the pin until it has been reset or until authorization to proceed is provided by the City.

C.32 CONTRACTOR STAMP

The Contractor shall stamp concrete flatwork to serve as a visual identification of who performed the work and when. Minimum placement of the stamp shall be one at each pedestrian curb ramp, one at each crosspan, and one every 100 linear feet (LF) in sidewalks and curb and gutter. The stamp shall include the Contractor's company name and the 4-digit year the work was completed.

C.33 FORCE ACCOUNT / MINOR WORK REVISIONS

Force Account will be used by the City to pay for miscellaneous items, materials and labor not identified as incidental to the work or identified as Contract Bid Items.

The additional work will be requested through a Minor Work Revision (MWR) sent to the Contractor requesting a cost proposal for the specific scope of work. The additional work shall not be performed or paid for until written authorization in the form of a signed MWR is provided by the City to the Contractor.

The City may require an itemized breakdown of the items to include Labor Rates/Hours, actual material costs, transportation fees, and other fees included in the cost proposal. After review and approval by the City of the submitted cost proposal, a signed MWR will be delivered via email to the Contractor authorizing the Force Account work to commence.

COLORADO SPRINGS

SCHEDULE D

Standard Specifications

TABLE OF CONTENTS

D.1 STANDARD SPECIFICATIONS D-3
D.2 CITY OF COLORADO SPRINGS D-3
D.2.1 ENGINEERING DIVISION STANDARD SPECIFICATIONS D-3
D.2.2 DRAINAGE CRITERIA MANUAL D-3
D.2.3 PIKES PEAK REGION ASPHALT PAVING SPECIFICATIONS D-4
D.2.4 TRAFFIC CONTROLS FOR STREET CONSTRUCTION, UTILITY WORK, AND MAINTENANCE OPERATIONS D-4
D.2.5 TRAFFIC ENGINEERING SIGNAGE AND PAVEMENT MARKINGS GUIDELINES D-4
D.2.6 TRAFFIC SIGNAL INSTALLATION AND PARTS SPECIFICATIONS FOR CONTRACTORS D-5
D.2.7 PARKS AND RECREATION SPECIFICATIONS D-5
D.3 COLORADO SPRINGS UTILITIES D-5
D.3.1 WATER LINE EXTENSION AND SERVICE STANDARDS D-5
D.3.2 WASTEWATER LINE EXTENSION AND SERVICE STANDARDS D-6
D.3.3 ELECTRIC LINE EXTENSION AND SERVICE STANDARDS D-6
D.4 COLORADO DEPARTMENT OF TRANSPORTATION D-6
D.4.1 STANDARD SPECIFICATIONS FOR ROAD AND BRIDGE D-6
D.4.2 M&S STANDARD PLANS D-6

This section describes the Standard Specifications and Revisions of Standard Specifications that govern the work. Material & Construction Requirements, Measurement, and Payment for all bid items shall be in accordance with Schedule E – Measurement and Payment, and shall take precedence over the material & construction requirements, measurement, and payment sections of the Standard Specifications or Revisions of Standard Specifications.

D.1 STANDARD SPECIFICATIONS

The following are the Standard Specifications which apply to this project. In the event of conflicting Standard Specifications, the order of precedence will be based upon:

1. The order in which the Standard Specifications are listed, if any, in Schedule E – Measurement and Payment for the bid item.
2. The order in which the Standard Specifications are listed in this Schedule.

The Contractor shall have at least one copy of the Standard Specifications applicable to the work at all times when work is underway and shall make these copies available at all times to employees of the Contractor and the City. Copies can be in paper or electronic format.

D.2 CITY OF COLORADO SPRINGS

D.2.1 ENGINEERING DIVISION STANDARD SPECIFICATIONS

The “City of Colorado Springs Engineering Division Standard Specifications”, Latest Edition, except as modified hereinafter, which is incorporated in the contract documents by reference as though embodied herein in its entirety, shall apply to this project. This document is referenced as the “City Standard Specifications”.

Copies are available from the City of Colorado Springs, Office Services Division, Suite L01, 30 South Nevada Avenue, Colorado Springs, during regular business hours or at the following website:

https://coloradosprings.gov/public-works/page/standard-specifications-manual

D.2.2 DRAINAGE CRITERIA MANUAL

The “City of Colorado Springs Drainage Criteria Manual”, Latest Edition, except as modified hereinafter, which is incorporated in the contract documents by reference as though embodied herein in its entirety, shall apply to this project. This document is referenced as the “City Drainage Criteria Manual” and shall include Policy Clarifications and the *Stormwater Construction Manual* issued by the Stormwater Enterprise.

Copies are available from the City of Colorado Springs, Office Services Division, Suite L01, 30 South Nevada Avenue, Colorado Springs, during regular business hours or at the following website:

https://coloradosprings.gov/stormwater-enterprise/page/drainage-criteria-manual?mlid=6291

D.2.3 PIKES PEAK REGION ASPHALT PAVING SPECIFICATIONS

The "Pikes Peak Region Asphalt Paving Specifications", Version 5, except as modified hereinafter, which is incorporated in the contract documents by reference as though embodied herein in its entirety, shall apply to this project.

Copies are available from the City of Colorado Springs, Office Services Division, Suite L01, 30 South Nevada Avenue, Colorado Springs, during regular business hours or at the following website:

https://coloradosprings.gov/public-works/page/engineering-criteria-manuals-references?mlid=23896

D.2.4 TRAFFIC CONTROLS FOR STREET CONSTRUCTION, UTILITY WORK, AND MAINTENANCE OPERATIONS

The "City of Colorado Springs Traffic Controls for Street Construction, Utility Work, and Maintenance Operations", Latest Edition, except as modified hereinafter, which is incorporated in the contract documents by reference as though embodied herein in its entirety, shall apply to this project.

Copies are available from the City of Colorado Springs, Office Services Division, Suite L01, 30 South Nevada Avenue, Colorado Springs, during regular business hours or at the following website:

https://coloradosprings.gov/public-works/page/standard-specifications-manual

D.2.5 TRAFFIC ENGINEERING SIGNAGE AND PAVEMENT MARKINGS GUIDELINES

The "City of Colorado Springs Traffic Engineering Signage and Pavement Markings Guidelines", Latest Edition, except as modified hereinafter, which is incorporated in the contract documents by reference as though embodied herein in its entirety, shall apply to this project.

Copies are available from the City of Colorado Springs, Office Services Division, Suite L01, 30 South Nevada Avenue, Colorado Springs, during regular business hours or at the following website:

https://coloradosprings.gov/public-works/page/standard-specifications-manual

D.2.6 TRAFFIC SIGNAL INSTALLATION AND PARTS SPECIFICATIONS FOR CONTRACTORS

The "Colorado Springs City Traffic Signal Installation and Parts Specifications for Contractors", 9/2/2016 Edition, except as modified hereinafter, which is incorporated in the contract documents by reference as though embodied herein in its entirety, shall apply to this project.

Copies are available from the City of Colorado Springs, Office Services Division, Suite L01, 30 South Nevada Avenue, Colorado Springs, during regular business hours or at the following website:

https://coloradosprings.gov/public-works/page/standard-specifications-manual

D.2.7 PARKS AND RECREATION SPECIFICATIONS

The following sections of the "City of Colorado Springs Parks and Recreation Specifications", except as modified hereinafter, which are incorporated in the contract documents by reference as though embodied herein in their entirety, shall apply to this project.

Section 02231 Tree Protection and Pruning
Section 02810 Irrigation Systems
Section 02920 Seeding and Sodding
Section 02930 Exterior Plants

Copies are available from the City of Colorado Springs, Office Services Division, Suite L01, 30 South Nevada Avenue, Colorado Springs, during regular business hours or at the following website:

https://coloradosprings.gov/public-works/page/reference-materials

D.3 COLORADO SPRINGS UTILITIES

D.3.1 WATER LINE EXTENSION AND SERVICE STANDARDS

The Standard Specifications for water line construction and protection shall be the "Colorado Springs Utilities Water Line Extension and Service Standards", Latest Edition, except as modified hereinafter, which is incorporated in the contract documents by reference as though embodied herein in its entirety.

Copies are available from the Colorado Springs Utilities' Development Services, 111 S. Cascade, Suite 105, Colorado Springs, CO 80903, during regular business hours or at the following website:

https://www.csu.org/Pages/standards-bulletins.aspx

D.3.2 WASTEWATER LINE EXTENSION AND SERVICE STANDARDS

The Standard Specifications for wastewater line construction and protection shall be the "Colorado Springs Utilities Wastewater Line Extension and Service Standards", Latest Edition, except as modified hereinafter, which is incorporated in the contract documents by reference as though embodied herein in its entirety.

Copies are available from the Colorado Springs Utilities' Development Services, 111 S. Cascade, Suite 105, Colorado Springs, CO 80903, during regular business hours or at the following website:

https://www.csu.org/Pages/standards-bulletins.aspx

D.3.3 ELECTRIC LINE EXTENSION AND SERVICE STANDARDS

The Standard Specifications for lighting installation, electrical distribution and electrical transmission line construction and protection shall be the "Colorado Springs Utilities Electric Line Extension and Service Standards", Latest Edition, except as modified hereinafter, which are incorporated in the contract documents by reference as though embodied herein in their entirety.

Copies are available from the Colorado Springs Utilities' Development Services, 111 S. Cascade, Suite 105, Colorado Springs, CO 80903, during regular business hours or at the following website:

https://www.csu.org/Pages/standards-bulletins.aspx

D.4 COLORADO DEPARTMENT OF TRANSPORTATION

D.4.1 STANDARD SPECIFICATIONS FOR ROAD AND BRIDGE

The "Colorado Department of Transportation Standard Specifications for Road and Bridge Construction", 2019 version, and all published standard special provisions, except as modified hereinafter, which is incorporated in the contract documents by reference as though embodied herein in its entirety, shall apply to this project. This document is referenced as the "CDOT Standard Specifications".

The aforementioned revisions to the CDOT Standard Specifications are available from the following website:

https://www.codot.gov/business/designsupport/cdot-construction-specifications/2019-construction-specifications

D.4.2 M&S STANDARD PLANS

The "Colorado Department of Transportation M&S Standard Plans", 2019 version, except as modified hereinafter, which is incorporated in the contract documents by reference as though embodied herein in its entirety, shall apply to this project. This document is reference as the "CDOT Standard Plans".

CDOT provides regular updates to the CDOT Standard Plans. The versions of each plan as specified on the "Standard Plans List" in the project plans shall apply to this project. CDOT Standard Plans are available from the following website:

https://www.codot.gov/business/designsupport/2019-and-2012-m-standards/2019-m-standards-plans

COLORADO SPRINGS

SCHEDULE E

Measurement and Payment

TABLE OF CONTENTS

E.1 MEASUREMENT OF PAY QUANTITIES

E.2 ESTIMATED QUANTITIES

E.3 ROUNDING

E.4 PAYMENT FOR LUMP SUM ITEMS

E.5 GENERAL PAYMENT

1. Remove and Replace Curb and Gutter Type 1 (LF)
2. Remove and Replace Curb and Gutter Type 1 (8-inch Reinforced) (LF)
3. Remove and Replace Curb and Gutter Type 1 (30-inch Gutter Pan) (LF)
4. Remove and Replace Curb and Gutter Type 1 (30-inch Gutter Pan) (8-inch Reinforced) (LF)
5. Remove and Replace Curb and Gutter Type 2 (LF)
6. Remove and Replace Curb and Gutter Type 2 (8-inch Reinforced) (LF)
7. Remove and Replace Curb and Gutter Type 3 (LF)
8. Remove and Replace Curb and Gutter Type 3 (8-inch Reinforced) (LF)
9. Remove and Replace Curb and Gutter Type 4 (LF)
10. Remove and Replace Curb and Gutter Type 4 (8-inch Reinforced) (LF)
11. Remove and Replace Curb and Gutter Type 5 (LF)
12. Remove and Replace Curb and Gutter Type 5 (8-inch Reinforced) (LF)
13. Remove and Replace Curb and Gutter (Roundabout Apron) (LF)
14. Remove and Replace Curb and Gutter (Roundabout Apron) (8-inch Reinforced) (LF)
15. Remove and Replace Curb and Gutter (Retro Type 2) (LF)
16. Remove and Replace Curb and Gutter (Retro Type 2) (8-inch Reinforced) (LF)
17. Remove and Replace Curb and Gutter Type 1 (Slip Form) (LF)
18. Remove and Replace Curb and Gutter Type 2 (Slip Form) (LF)
19. Remove and Replace Curb and Gutter Type 3 (Slip Form) (LF)
20. Curb Head (up to 8-inch) (LF)
21. Curb Head (up to 8-inch) (Reinforced) (LF)
22. Remove and Replace Concrete (4-inch) (SF)
23. Remove and Replace Concrete (6-inch) (SF)
24. Remove and Replace Concrete (8-inch Reinforced) (SF)
25. Remove and Replace Curb Ramp (6-inch) (SF)
26. Remove and Replace Curb Ramp (8-inch Reinforced) (SF)
27. Detectable Warning Surface (Truncated Domes) (SF)
28. Patterned Concrete (4-inch) (Springs Brown) (SF)
29. Patterned Concrete (8-inch Reinforced) (Springs Brown) (SF)
30. Patterned Concrete (4-inch) (San Diego Buff) (SF)
31. Patterned Concrete (8-inch Reinforced) (San Diego Buff) (SF)

32. Patterned Concrete (4-inch) (Cobblestone) (SF)
33. Patterned Concrete (8-inch Reinforced) (Cobblestone) (SF)
34. Remove Ground Cover Material (up to 8-inch) (SF)
35. Remove Curb and Gutter (Any Type) (LF)
36. Remove Concrete (up to 4-inch) (SF)
37. Fast Track Concrete (Accelerant) (CY)
38. Remove Asphalt (up to 6-inch) (SF)
39. Remove and Replace Asphalt (Patching) (6-inch) (SF)
40. Aggregate Base Course (Class 6) (CY)
41. Aggregate Base Course (Class 6) (Excavation Included) (CY)
42. Remove and Replace Inlet Apron (8-inch Reinforced) (SF)
43. Remove and Replace Inlet Deck (6-inch Reinforced) (SF)
44. Remove and Replace Inlet Wall (6-inch Reinforced) (no pipe penetration) (SF)
45. Remove and Replace Inlet Wall (6-inch Reinforced) (with pipe/s penetration) (SF)
46. Remove and Replace Inlet Floor (8-inch Reinforced) (SF)
47. Remove Bubbler (EA)
48. Abandon Culvert (Flowfill) (CY)
49. Remove Chase Drain (SF)
50. Chase Drain (Angle Iron) (LF)
51. Chase Drain (Galvanized Plate) (SF)
52. Reset Chase Drain (Galvanized Plate) (SF)
53. Curb Opening Box (EA)
54. Combination Inlet Frame, Grate, Curb Box (EA)
55. Concrete Washout Container (DAY)
56. Storm Drain Inlet Protection (EA)
57. Rock Sock (LF)
58. 2-Inch Electrical Conduit (Schedule 40) (LF)
59. Pedestrian Push Button Caisson (EA)
60. Adjust Manhole Ring and Cover (EA)
61. Adjust Water Valve Box (EA)
62. Reset Pull Box (Standard) (EA)
63. Reset Pull Box (Large) (EA)
64. Reset Ground Sign (EA)
65. Reset Minor Structure (EA)
66. Portable Message Sign Panel (DAY)
67. Flagging (HR)
68. Landscape Rock (Type A) (SF)
69. Landscape Rock (Type B) (SF)

70. Landscape Rock (Type C) (SF)
71. Wood Mulch (Natural) (SF)
72. Wood Mulch (Stained) (SF)
73. Wood Mulch (Gorilla Hair) (SF)
74. Sod (SF)
75. Force Account / Minor Work Revisions (FA)

The Measurement and Payment for all bid items shall be in accordance with this section and shall take precedence over the measurement and payment sections of the Standard Specifications or Revisions of Standard Specifications.

E.1 MEASUREMENT OF PAY QUANTITIES

A. The Contractor shall make all measurements to determine all quantities of work done under the Contract subject to approval by the Inspector. At the time measurements are made for quantity determinations, the Inspector, or their authorized assistant, will be present to verify such measurements.

B. No measurement will be made for:

1. Work performed or materials placed outside of areas established by the Inspector.
2. Materials wasted, used, or disposed of in a manner not called for under the contract.
3. Materials on hand after completion of construction.
4. Rejected materials (including material rejected after it has been placed if the rejection is due to the Contractor's failure to comply with the provisions of the contract).
5. Hauling and disposing of rejected or unused materials.
6. Any other work or material when payment is contrary to any provision of the contract.
7. All incidental costs necessary for proper performance of the work.

E.2 ESTIMATED QUANTITIES

The estimated quantities shown in the bid form are estimates only, given only as the basis for comparison of the bids, and the City does not warrant, expressly or by implication, that the actual amount of work will correspond with the estimates. The right to increase or decrease the amount of any class or portion of the work or to make changes in the work required is reserved by the City as provided elsewhere in these specifications. The basis of payment will be the actual unit bid items of work performed and measured in accordance with the contract unless noted otherwise in the specifications. All prospective bidders should note that certain bid items may be included in the Bid Form to establish a unit price should the use of those items become necessary during construction. Allowance will not be made for loss of anticipated profits of additional compensation should the use of these items be deemed unnecessary.

E.3 ROUNDING

Quantities for final and interim payment will be rounded according to the table below:

PAY UNIT		ROUNDING CRITERIA
Acre	AC	.X
Cubic Yard (concrete)	CY	.X
Cubic Yard	CY	X.
Day	DAY	X.
Each	EA	.X
Gallon	GAL	X.
Hour	HR	X.
Linear Foot	LF	X.
Lump Sum	LS	.X%
Pound	LB	X.
Square Foot	SF	X.
Square Yard	SY	X.
Ton	TON	.XX

LEGEND	
X.	Round to the nearest whole unit.
.X	Round to the nearest tenth of a unit.
.XX	Round to the nearest hundredth of a unit.

If the excess digit directly to the right of the place to be rounded to is 4 or less, round down, otherwise round up. A representative of the City (an Inspector) may carry additional digits for individual measurements, but for interim payment these measurements will be summed and then rounded. If the item is not measured and is equal to plan quantity, all interim measurements will be rounded to the nearest whole unit. Quantities shown in the plans and contract quantities have been rounded to the nearest whole unit.

E.4 PAYMENT FOR LUMP SUM ITEMS

Measurement will be for work installed and accepted.

E.5 GENERAL PAYMENT

Payment will be made only for items listed in the bid form, items added through Minor Work Revision, or work authorized for payment through Force Account. All other work and material required for completion of the project will be considered incidental.

1. Remove and Replace Curb and Gutter Type 1 (LF)

DESCRIPTION

This work consists of the removal of existing concrete curb and gutter (any type) and construction of Curb and Gutter Type 1 in a similar location.

MATERIAL AND CONSTRUCTION REQUIREMENTS

Work shall meet the requirements of:
- Sections 220 and 500 of the City Standard Specifications
- City Standard Drawing D-6

METHOD OF MEASUREMENT

Quantity will be measured by linear feet of installed curb and gutter, measured along the front face of curb at the flowline of the gutter. Measurements will be made along the finished surface and are not constrained to the horizontal or vertical plane.

Included in Measurement
- Transitions between types of curb and gutter will be measured. Each type will be measured to the midway point of the transition.
- Curb and gutter will be measured through or around the following:
  - Squared returns
  - Plowable end sections
  - Openings for pedestrian ramps
  - Driveways

Excluded from Measurement
- Curb and gutter that is placed as part of a drainage structure will not be measured but shall be included in the cost of the drainage structure.
- Curb and gutter that is removed and not replaced will not be measured under this Contract Item.

BASIS OF PAYMENT

Payment will be made at the contract unit price and shall include full compensation for all labor, equipment, tools, and materials necessary to complete the work including but not limited to the following:

- Sawcutting
- Containment of sawcut slurry and dust
- Removal and off-site disposal of removed materials and debris
- Excavation
- Scarification, recompaction, and stabilization of the top six (6) inches of subgrade beneath the base of the constructed concrete
- Backfill
- Staking and line set
- Subgrade preparation
- Compaction
- Placement of select fill for leveling and forming
- Forming
- Expansion joint material
- Concrete
- Finishing
- Curing
- Cold weather protection

2. Remove and Replace Curb and Gutter Type 1 (8-inch Reinforced) (LF)

DESCRIPTION

This work consists of the removal of existing concrete curb and gutter (any type) and construction of Curb and Gutter Type 1 (8-inch Reinforced) in a similar location.

MATERIAL AND CONSTRUCTION REQUIREMENTS

Work shall meet the requirements of:
- Sections 220 and 500 of the City Standard Specifications
- City Standard Drawing D-6

Curb and gutter constructed alongside a squared return shall have the same thickness and reinforcement as the squared return.

METHOD OF MEASUREMENT

Quantity will be measured by linear feet of installed curb and gutter, measured along the front face of curb at the flowline of the gutter. All measurements will be made along the finished surface and are not constrained to the horizontal or vertical plane.

Included in Measurement
- Transitions between types of curb and gutter will be measured. Each type will be measured to the midway point of the transition.
- Curb and gutter will be measured through or around the following:
  - Squared returns
  - Plowable end sections
  - Openings for pedestrian ramps
  - Driveways

Excluded from Measurement
- Curb and gutter that is placed as part of a drainage structure will not be measured but shall be included in the cost of the drainage structure.
- Curb and gutter that is removed and not replaced will not be measured under this Contract Item.

BASIS OF PAYMENT

Payment will be made at the contract unit price and shall include full compensation for all labor, equipment, tools, and materials necessary to complete the work including but not limited to the following:

- Sawcutting
- Containment of sawcut slurry and dust
- Removal and off-site disposal of removed materials and debris
- Excavation
- Scarification, recompaction, and stabilization of the top six (6) inches of subgrade beneath the base of the constructed concrete
- Backfill
- Staking and line set
- Subgrade preparation
- Compaction
- Placement of select fill for leveling and forming
- Forming
- Expansion joint material
- Concrete
- Finishing
- Curing
- Reinforcement
- Cold weather protection

3. Remove and Replace Curb and Gutter Type 1 (30-inch Gutter Pan) (LF)

DESCRIPTION

This work consists of the removal of existing concrete curb and gutter (any type) and construction of Curb and Gutter Type 1 (30-inch Gutter Pan) in a similar location.

MATERIAL AND CONSTRUCTION REQUIREMENTS

Work shall meet the requirements of:
- Sections 220 and 500 of the City Standard Specifications
- City Standard Drawing D-6

METHOD OF MEASUREMENT

Quantity will be measured by linear feet of installed curb and gutter, measured along the front face of curb at the flowline of the gutter. Measurements will be made along the finished surface and are not constrained to the horizontal or vertical plane.

Included in Measurement
- Transitions between types of curb and gutter will be measured. Each type will be measured to the midway point of the transition.
- Curb and gutter will be measured through or around the following:
    - Squared returns
    - Plowable end sections
    - Openings for pedestrian ramps
    - Driveways

Excluded from Measurement
- Curb and gutter that is placed as part of a drainage structure will not be measured but shall be included in the cost of the drainage structure.
- Curb and gutter that is removed and not replaced will not be measured under this Contract Item.

BASIS OF PAYMENT

Payment will be made at the contract unit price and shall include full compensation for all labor, equipment, tools, and materials necessary to complete the work including but not limited to the following:

- Sawcutting
- Containment of sawcut slurry and dust
- Removal and off-site disposal of removed materials and debris
- Excavation
- Scarification, recompaction, and stabilization of the top six (6) inches of subgrade beneath the base of the constructed concrete
- Backfill
- Staking and line set
- Subgrade preparation
- Compaction
- Placement of select fill for leveling and forming
- Forming
- Expansion joint material
- Concrete
- Finishing
- Curing
- Cold weather protection

4. Remove and Replace Curb and Gutter Type 1 (30-inch Gutter Pan) (8-inch Reinforced) (LF)

DESCRIPTION

This work consists of the removal of existing concrete curb and gutter (any type) and construction of Curb and Gutter Type 1 (30-inch Gutter Pan) (8-inch Reinforced) in a similar location.

MATERIAL AND CONSTRUCTION REQUIREMENTS

Work shall meet the requirements of:
- Sections 220 and 500 of the City Standard Specifications
- City Standard Drawing D-6

Curb and gutter constructed alongside a squared return shall have the same thickness and reinforcement as the squared return.

METHOD OF MEASUREMENT

Quantity will be measured by linear feet of installed curb and gutter, measured along the front face of curb at the flowline of the gutter. All measurements will be made along the finished surface and are not constrained to the horizontal or vertical plane.

Included in Measurement
- Transitions between types of curb and gutter will be measured. Each type will be measured to the midway point of the transition.
- Curb and gutter will be measured through or around the following:
  - Squared returns
  - Plowable end sections
  - Openings for pedestrian ramps
  - Driveways

Excluded from Measurement
- Curb and gutter that is placed as part of a drainage structure will not be measured but shall be included in the cost of the drainage structure.
- Curb and gutter that is removed and not replaced will not be measured under this Contract Item.

BASIS OF PAYMENT

Payment will be made at the contract unit price and shall include full compensation for all labor, equipment, tools, and materials necessary to complete the work including but not limited to the following:

- Sawcutting
- Containment of sawcut slurry and dust
- Removal and off-site disposal of removed materials and debris
- Excavation
- Scarification, recompaction, and stabilization of the top six (6) inches of subgrade beneath the base of the constructed concrete
- Backfill
- Staking and line set
- Subgrade preparation
- Compaction
- Placement of select fill for leveling and forming
- Forming
- Expansion joint material
- Concrete
- Finishing
- Curing
- Reinforcement
- Cold weather protection

5. Remove and Replace Curb and Gutter Type 2 (LF)

DESCRIPTION

This work consists of the removal of existing concrete curb and gutter (any type) and construction of Curb and Gutter Type 2 in a similar location.

MATERIAL AND CONSTRUCTION REQUIREMENTS

Work shall meet the requirements of:
- Sections 220 and 500 of the City Standard Specifications
- City Standard Drawing D-6

METHOD OF MEASUREMENT

Quantity will be measured by linear feet of installed curb and gutter, measured along the front face of curb at the flowline of the gutter. Measurements will be made along the finished surface and are not constrained to the horizontal or vertical plane.

Included in Measurement
- Transitions between types of curb and gutter will be measured. Each type will be measured to the midway point of the transition.
- Curb and gutter will be measured through or around the following:
  - Squared returns
  - Plowable end sections
  - Openings for pedestrian ramps
  - Driveways

Excluded from Measurement
- Curb and gutter that is placed as part of a drainage structure will not be measured but shall be included in the cost of the drainage structure.
- Curb and gutter that is removed and not replaced will not be measured under this Contract Item.

BASIS OF PAYMENT

Payment will be made at the contract unit price and shall include full compensation for all labor, equipment, tools, and materials necessary to complete the work including but not limited to the following:

- Sawcutting
- Containment of sawcut slurry and dust
- Removal and off-site disposal of removed materials and debris
- Excavation
- Scarification, recompaction, and stabilization of the top six (6) inches of subgrade beneath the base of the constructed concrete
- Backfill
- Staking and line set
- Subgrade preparation
- Compaction
- Placement of select fill for leveling and forming
- Forming
- Expansion joint material
- Concrete
- Finishing
- Curing
- Cold weather protection

6. Remove and Replace Curb and Gutter Type 2 (8-inch Reinforced) (LF)

DESCRIPTION

This work consists of the removal of existing concrete curb and gutter (any type) and construction of Curb and Gutter Type 2 (8-inch Reinforced) in a similar location.

MATERIAL AND CONSTRUCTION REQUIREMENTS

Work shall meet the requirements of:
- Sections 220 and 500 of the City Standard Specifications
- City Standard Drawing D-6

Curb and gutter constructed alongside a squared return shall have the same thickness and reinforcement as the squared return.

METHOD OF MEASUREMENT

Quantity will be measured by linear feet of installed curb and gutter, measured along the front face of curb at the flowline of the gutter. All measurements will be made along the finished surface and are not constrained to the horizontal or vertical plane.

Included in Measurement
- Transitions between types of curb and gutter will be measured. Each type will be measured to the midway point of the transition.
- Curb and gutter will be measured through or around the following:
  - Squared returns
  - Plowable end sections
  - Openings for pedestrian ramps
  - Driveways

Excluded from Measurement
- Curb and gutter that is placed as part of a drainage structure will not be measured but shall be included in the cost of the drainage structure.
- Curb and gutter that is removed and not replaced will not be measured under this Contract Item.

BASIS OF PAYMENT

Payment will be made at the contract unit price and shall include full compensation for all labor, equipment, tools, and materials necessary to complete the work including but not limited to the following:

- Sawcutting
- Containment of sawcut slurry and dust
- Removal and off-site disposal of removed materials and debris
- Excavation
- Scarification, recompaction, and stabilization of the top six (6) inches of subgrade beneath the base of the constructed concrete
- Backfill
- Staking and line set
- Subgrade preparation
- Compaction
- Placement of select fill for leveling and forming
- Forming
- Expansion joint material
- Concrete
- Finishing
- Curing
- Reinforcement
- Cold weather protection

7. Remove and Replace Curb and Gutter Type 3 (LF)

DESCRIPTION

This work consists of the removal of existing concrete curb and gutter (any type) and construction of Curb and Gutter Type 3 in a similar location.

MATERIAL AND CONSTRUCTION REQUIREMENTS

Work shall meet the requirements of:
- Sections 220 and 500 of the City Standard Specifications
- City Standard Drawing D-6

METHOD OF MEASUREMENT

Quantity will be measured by linear feet of installed curb and gutter, measured along the front face of curb at the flowline of the gutter. Measurements will be made along the finished surface and are not constrained to the horizontal or vertical plane.

Included in Measurement
- Transitions between types of curb and gutter will be measured. Each type will be measured to the midway point of the transition.
- Curb and gutter will be measured through or around the following:
  - Squared returns
  - Plowable end sections
  - Openings for pedestrian ramps
  - Driveways

Excluded from Measurement
- Curb and gutter that is placed as part of a drainage structure will not be measured but shall be included in the cost of the drainage structure.
- Curb and gutter that is removed and not replaced will not be measured under this Contract Item.

BASIS OF PAYMENT

Payment will be made at the contract unit price and shall include full compensation for all labor, equipment, tools, and materials necessary to complete the work including but not limited to the following:

- Sawcutting
- Containment of sawcut slurry and dust
- Removal and off-site disposal of removed materials and debris
- Excavation
- Scarification, recompaction, and stabilization of the top six (6) inches of subgrade beneath the base of the constructed concrete
- Backfill
- Staking and line set
- Subgrade preparation
- Compaction
- Placement of select fill for leveling and forming
- Forming
- Expansion joint material
- Concrete
- Finishing
- Curing
- Cold weather protection

8. Remove and Replace Curb and Gutter Type 3 (8-inch Reinforced) (LF)

DESCRIPTION

This work consists of the removal of existing concrete curb and gutter (any type) and construction of Curb and Gutter Type 3 (8-inch Reinforced) in a similar location.

MATERIAL AND CONSTRUCTION REQUIREMENTS

Work shall meet the requirements of:
- Sections 220 and 500 of the City Standard Specifications
- City Standard Drawing D-6

Curb and gutter constructed alongside a squared return shall have the same thickness and reinforcement as the squared return.

METHOD OF MEASUREMENT

Quantity will be measured by linear feet of installed curb and gutter, measured along the front face of curb at the flowline of the gutter. All measurements will be made along the finished surface and are not constrained to the horizontal or vertical plane.

Included in Measurement
- Transitions between types of curb and gutter will be measured. Each type will be measured to the midway point of the transition.
- Curb and gutter will be measured through or around the following:
  - Squared returns
  - Plowable end sections
  - Openings for pedestrian ramps
  - Driveways

Excluded from Measurement
- Curb and gutter that is placed as part of a drainage structure will not be measured but shall be included in the cost of the drainage structure.
- Curb and gutter that is removed and not replaced will not be measured under this Contract Item.

BASIS OF PAYMENT

Payment will be made at the contract unit price and shall include full compensation for all labor, equipment, tools, and materials necessary to complete the work including but not limited to the following:

- Sawcutting
- Containment of sawcut slurry and dust
- Removal and off-site disposal of removed materials and debris
- Excavation
- Scarification, recompaction, and stabilization of the top six (6) inches of subgrade beneath the base of the constructed concrete
- Backfill
- Staking and line set
- Subgrade preparation
- Compaction
- Placement of select fill for leveling and forming
- Forming
- Expansion joint material
- Concrete
- Finishing
- Curing
- Reinforcement
- Cold weather protection

9. Remove and Replace Curb and Gutter Type 4 (LF)

DESCRIPTION

This work consists of the removal of existing concrete curb and gutter (any type) and construction of Curb and Gutter Type 4 in a similar location.

MATERIAL AND CONSTRUCTION REQUIREMENTS

Work shall meet the requirements of:
- Sections 220 and 500 of the City Standard Specifications
- City Standard Drawing D-6

METHOD OF MEASUREMENT

Quantity will be measured by linear feet of installed curb and gutter, measured along the front face of curb at the flowline of the gutter. Measurements will be made along the finished surface and are not constrained to the horizontal or vertical plane.

Included in Measurement
- Transitions between types of curb and gutter will be measured. Each type will be measured to the midway point of the transition.
- Curb and gutter will be measured through or around the following:
  - Squared returns
  - Plowable end sections
  - Openings for pedestrian ramps
  - Driveways

Excluded from Measurement
- Curb and gutter that is placed as part of a drainage structure will not be measured but shall be included in the cost of the drainage structure.
- Curb and gutter that is removed and not replaced will not be measured under this Contract Item.

BASIS OF PAYMENT

Payment will be made at the contract unit price and shall include full compensation for all labor, equipment, tools, and materials necessary to complete the work including but not limited to the following:

- Sawcutting
- Containment of sawcut slurry and dust
- Removal and off-site disposal of removed materials and debris
- Excavation
- Scarification, recompaction, and stabilization of the top six (6) inches of subgrade beneath the base of the constructed concrete
- Backfill
- Staking and line set
- Subgrade preparation
- Compaction
- Placement of select fill for leveling and forming
- Forming
- Expansion joint material
- Concrete
- Finishing
- Curing
- Cold weather protection

10. Remove and Replace Curb and Gutter Type 4 (8-inch Reinforced) (LF)

DESCRIPTION

This work consists of the removal of existing concrete curb and gutter (any type) and construction of Curb and Gutter Type 4 (8-inch Reinforced) in a similar location.

MATERIAL AND CONSTRUCTION REQUIREMENTS

Work shall meet the requirements of:
- Sections 220 and 500 of the City Standard Specifications
- City Standard Drawing D-6

Curb and gutter constructed alongside a squared return shall have the same thickness and reinforcement as the squared return.

METHOD OF MEASUREMENT

Quantity will be measured by linear feet of installed curb and gutter, measured along the front face of curb at the flowline of the gutter. All measurements will be made along the finished surface and are not constrained to the horizontal or vertical plane.

Included in Measurement
- Transitions between types of curb and gutter will be measured. Each type will be measured to the midway point of the transition.
- Curb and gutter will be measured through or around the following:
  - Squared returns
  - Plowable end sections
  - Openings for pedestrian ramps
  - Driveways

Excluded from Measurement
- Curb and gutter that is placed as part of a drainage structure will not be measured but shall be included in the cost of the drainage structure.
- Curb and gutter that is removed and not replaced will not be measured under this Contract Item.

BASIS OF PAYMENT

Payment will be made at the contract unit price and shall include full compensation for all labor, equipment, tools, and materials necessary to complete the work including but not limited to the following:

- Sawcutting
- Containment of sawcut slurry and dust
- Removal and off-site disposal of removed materials and debris
- Excavation
- Scarification, recompaction, and stabilization of the top six (6) inches of subgrade beneath the base of the constructed concrete
- Backfill
- Staking and line set
- Subgrade preparation
- Compaction
- Placement of select fill for leveling and forming
- Forming
- Expansion joint material
- Concrete
- Finishing
- Curing
- Reinforcement
- Cold weather protection

11. Remove and Replace Curb and Gutter Type 5 (LF)

DESCRIPTION

This work consists of the removal of existing concrete curb and gutter (any type) and construction of Curb and Gutter Type 5 in a similar location.

MATERIAL AND CONSTRUCTION REQUIREMENTS

Work shall meet the requirements of:
- Sections 220 and 500 of the City Standard Specifications
- City Standard Drawing D-6

METHOD OF MEASUREMENT

Quantity will be measured by linear feet of installed curb and gutter, measured along the front face of curb at the flowline of the gutter. Measurements will be made along the finished surface and are not constrained to the horizontal or vertical plane.

Included in Measurement
- Transitions between types of curb and gutter will be measured. Each type will be measured to the midway point of the transition.
- Curb and gutter will be measured through or around the following:
  - Squared returns
  - Plowable end sections
  - Openings for pedestrian ramps
  - Driveways

Excluded from Measurement
- Curb and gutter that is placed as part of a drainage structure will not be measured but shall be included in the cost of the drainage structure.
- Curb and gutter that is removed and not replaced will not be measured under this Contract Item.

BASIS OF PAYMENT

Payment will be made at the contract unit price and shall include full compensation for all labor, equipment, tools, and materials necessary to complete the work including but not limited to the following:

- Sawcutting
- Containment of sawcut slurry and dust
- Removal and off-site disposal of removed materials and debris
- Excavation
- Scarification, recompaction, and stabilization of the top six (6) inches of subgrade beneath the base of the constructed concrete
- Backfill
- Staking and line set
- Subgrade preparation
- Compaction
- Placement of select fill for leveling and forming
- Forming
- Expansion joint material
- Concrete
- Finishing
- Curing
- Cold weather protection

12. Remove and Replace Curb and Gutter Type 5 (8-inch Reinforced) (LF)

DESCRIPTION

This work consists of the removal of existing concrete curb and gutter (any type) and construction of Curb and Gutter Type 5 (8-inch Reinforced) in a similar location.

MATERIAL AND CONSTRUCTION REQUIREMENTS

Work shall meet the requirements of:
- Sections 220 and 500 of the City Standard Specifications
- City Standard Drawing D-6

Curb and gutter constructed alongside a squared return shall have the same thickness and reinforcement as the squared return.

METHOD OF MEASUREMENT

Quantity will be measured by linear feet of installed curb and gutter, measured along the front face of curb at the flowline of the gutter. All measurements will be made along the finished surface and are not constrained to the horizontal or vertical plane.

Included in Measurement
- Transitions between types of curb and gutter will be measured. Each type will be measured to the midway point of the transition.
- Curb and gutter will be measured through or around the following:
  - Squared returns
  - Plowable end sections
  - Openings for pedestrian ramps
  - Driveways

Excluded from Measurement
- Curb and gutter that is placed as part of a drainage structure will not be measured but shall be included in the cost of the drainage structure.
- Curb and gutter that is removed and not replaced will not be measured under this Contract Item.

BASIS OF PAYMENT

Payment will be made at the contract unit price and shall include full compensation for all labor, equipment, tools, and materials necessary to complete the work including but not limited to the following:

- Sawcutting
- Containment of sawcut slurry and dust
- Removal and off-site disposal of removed materials and debris
- Excavation
- Scarification, recompaction, and stabilization of the top six (6) inches of subgrade beneath the base of the constructed concrete
- Backfill
- Staking and line set
- Subgrade preparation
- Compaction
- Placement of select fill for leveling and forming
- Forming
- Expansion joint material
- Concrete
- Finishing
- Curing
- Reinforcement
- Cold weather protection

13. Remove and Replace Curb and Gutter (Roundabout Apron) (LF)

DESCRIPTION

This work consists of the removal of existing concrete curb and gutter (any type) and construction of Curb and Gutter Type (Roundabout Apron) in a similar location.

MATERIAL AND CONSTRUCTION REQUIREMENTS

Work shall meet the requirements of:
- Sections 220 and 500 of the City Standard Specifications
- City Standard Drawing D-6

METHOD OF MEASUREMENT

Quantity will be measured by linear feet of installed curb and gutter, measured along the front face of curb at the flowline of the gutter. Measurements will be made along the finished surface and are not constrained to the horizontal or vertical plane.

Included in Measurement
- Transitions between types of curb and gutter will be measured. Each type will be measured to the midway point of the transition.
- Curb and gutter will be measured through or around the following:
    - Squared returns
    - Plowable end sections
    - Openings for pedestrian ramps
    - Driveways

Excluded from Measurement
- Curb and gutter that is placed as part of a drainage structure will not be measured but shall be included in the cost of the drainage structure.
- Curb and gutter that is removed and not replaced will not be measured under this Contract Item.

BASIS OF PAYMENT

Payment will be made at the contract unit price and shall include full compensation for all labor, equipment, tools, and materials necessary to complete the work including but not limited to the following:

- Sawcutting
- Containment of sawcut slurry and dust
- Removal and off-site disposal of removed materials and debris
- Excavation
- Scarification, recompaction, and stabilization of the top six (6) inches of subgrade beneath the base of the constructed concrete
- Backfill
- Staking and line set
- Subgrade preparation
- Compaction
- Placement of select fill for leveling and forming
- Forming
- Expansion joint material
- Concrete
- Finishing
- Curing
- Cold weather protection

14. Remove and Replace Curb and Gutter (Roundabout Apron) (8-inch Reinforced) (LF)

DESCRIPTION

This work consists of the removal of existing concrete curb and gutter (any type) and construction of Curb and Gutter (Roundabout Apron) (8-inch Reinforced) in a similar location.

MATERIAL AND CONSTRUCTION REQUIREMENTS

Work shall meet the requirements of:
- Sections 220 and 500 of the City Standard Specifications
- City Standard Drawing D-6

Curb and gutter constructed alongside a squared return shall have the same thickness and reinforcement as the squared return.

METHOD OF MEASUREMENT

Quantity will be measured by linear feet of installed curb and gutter, measured along the front face of curb at the flowline of the gutter. All measurements will be made along the finished surface and are not constrained to the horizontal or vertical plane.

Included in Measurement
- Transitions between types of curb and gutter will be measured. Each type will be measured to the midway point of the transition.
- Curb and gutter will be measured through or around the following:
  - Squared returns
  - Plowable end sections
  - Openings for pedestrian ramps
  - Driveways

Excluded from Measurement
- Curb and gutter that is placed as part of a drainage structure will not be measured but shall be included in the cost of the drainage structure.
- Curb and gutter that is removed and not replaced will not be measured under this Contract Item.

BASIS OF PAYMENT

Payment will be made at the contract unit price and shall include full compensation for all labor, equipment, tools, and materials necessary to complete the work including but not limited to the following:

- Sawcutting
- Containment of sawcut slurry and dust
- Removal and off-site disposal of removed materials and debris
- Excavation
- Scarification, recompaction, and stabilization of the top six (6) inches of subgrade beneath the base of the constructed concrete
- Backfill
- Staking and line set
- Subgrade preparation
- Compaction
- Placement of select fill for leveling and forming
- Forming
- Expansion joint material
- Concrete
- Finishing
- Curing
- Reinforcement
- Cold weather protection

15. Remove and Replace Curb and Gutter (Retro Type 2) (LF)

DESCRIPTION

This work consists of the removal of existing concrete curb and gutter (any type) and construction of Curb and Gutter (Retro Type 2) in a similar location.

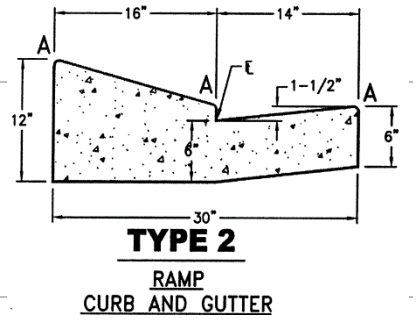

MATERIAL AND CONSTRUCTION REQUIREMENTS

Work shall meet the requirements of:

- Sections 220 and 500 of the City Standard Specifications
- Type 2 detail for this Contract Item. “A” indicates ½” radii.

METHOD OF MEASUREMENT

Quantity will be measured by linear feet of installed curb and gutter, measured along the front face of curb at the flowline of the gutter. Measurements will be made along the finished surface and are not constrained to the horizontal or vertical plane.

Included in Measurement

- Transitions between types of curb and gutter will be measured. Each type will be measured to the midway point of the transition.
- Curb and gutter will be measured through or around the following:
  - Squared returns
  - Plowable end sections
  - Openings for pedestrian ramps
  - Driveways

Excluded from Measurement

- Curb and gutter that is placed as part of a drainage structure will not be measured but shall be included in the cost of the drainage structure.
- Curb and gutter that is removed and not replaced will not be measured under this Contract Item.

BASIS OF PAYMENT

Payment will be made at the contract unit price and shall include full compensation for all labor, equipment, tools, and materials necessary to complete the work including but not limited to the following:

- Sawcutting
- Containment of sawcut slurry and dust
- Removal and off-site disposal of removed materials and debris
- Excavation
- Scarification, recompaction, and stabilization of the top six (6) inches of subgrade beneath the base of the constructed concrete
- Backfill
- Staking and line set
- Subgrade preparation
- Compaction
- Placement of select fill for leveling and forming
- Forming
- Expansion joint material
- Concrete
- Finishing
- Curing
- Cold weather protection

16. Remove and Replace Curb and Gutter (Retro Type 2) (8-inch Reinforced) (LF)

DESCRIPTION

This work consists of the removal of existing concrete curb and gutter (any type) and construction of Curb and Gutter (Retro Type 2) in a similar location.

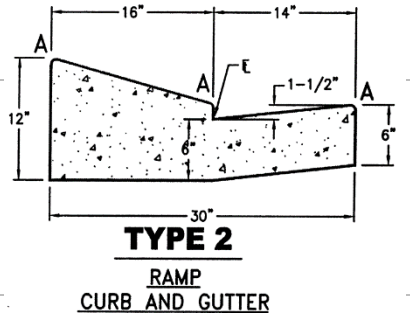

MATERIAL AND CONSTRUCTION REQUIREMENTS

Work shall meet the requirements of:

- Sections 220 and 500 of the City Standard Specifications
- Type 2 detail for this Contract Item. “A” indicates ½” radii.

METHOD OF MEASUREMENT

Quantity will be measured by linear feet of installed curb and gutter, measured along the front face of curb at the flowline of the gutter. Measurements will be made along the finished surface and are not constrained to the horizontal or vertical plane.

Included in Measurement

- Transitions between types of curb and gutter will be measured. Each type will be measured to the midway point of the transition.
- Curb and gutter will be measured through or around the following:
  - Squared returns
  - Plowable end sections
  - Openings for pedestrian ramps
  - Driveways

Excluded from Measurement

- Curb and gutter that is placed as part of a drainage structure will not be measured but shall be included in the cost of the drainage structure.
- Curb and gutter that is removed and not replaced will not be measured under this Contract Item.

BASIS OF PAYMENT

Payment will be made at the contract unit price and shall include full compensation for all labor, equipment, tools, and materials necessary to complete the work including but not limited to the following:

- Sawcutting
- Containment of sawcut slurry and dust
- Removal and off-site disposal of removed materials and debris
- Excavation
- Scarification, recompaction, and stabilization of the top six (6) inches of subgrade beneath the base of the constructed concrete
- Backfill
- Staking and line set
- Subgrade preparation
- Compaction
- Placement of select fill for leveling and forming
- Forming
- Expansion joint material
- Concrete
- Finishing
- Curing
- Reinforcement
- Cold weather protection

17. Remove and Replace Curb and Gutter Type 1 (Slip Form) (LF)

DESCRIPTION

This work consists of the removal of existing curb and gutter (any type) and construction of Curb and Gutter Type 1 (Slip Form) in a similar location by use of a concrete slipform machine.

MATERIAL AND CONSTRUCTION REQUIREMENTS

Work shall meet the requirements of:
- Sections 220 and 500 of the City Standard Specifications
- City Standard Drawing D-6

Slip form equipment shall be pre-approved by the Project Manager prior to use. All equipment and machinery shall be kept in good working order, be free of leaks, properly muffled, and have automatic sensor controls for line and grade which operate from an offset control line. Slip form equipment shall be equipped with traveling side forms of sufficient dimension, shape, and strength to support curb and gutter laterally for a sufficient length of time during placement to produce the required finished cross section. No abrupt changes in longitudinal alignment of the pavement will be permitted. The horizontal deviation shall not exceed 0.04 foot from the alignment established by the City.

METHOD OF MEASUREMENT

Quantity will be measured by linear feet of installed curb and gutter, measured along the front face of curb at the flowline of the gutter. Measurements will be made along the finished surface and are not constrained to the horizontal or vertical plane.

Included in Measurement
- Transitions between types of curb and gutter will be measured. Each type will be measured to the midway point of the transition.
- Curb and gutter will be measured through or around the following:
  - Squared returns
  - Plowable end sections
  - Openings for pedestrian ramps
  - Driveways

Excluded from Measurement
- Curb and gutter that is placed as part of a drainage structure will not be measured but shall be included in the cost of the drainage structure.
- Curb and gutter that is removed and not replaced will not be measured under this Contract Item.

BASIS OF PAYMENT

Payment will be made at the contract unit price and shall include full compensation for all labor, equipment, tools, and materials necessary to complete the work including but not limited to the following:

- Sawcutting
- Containment of sawcut slurry and dust
- Removal and off-site disposal of removed materials and debris
- Excavation
- Scarification, recompaction, and stabilization of the top six (6) inches of subgrade beneath the base of the constructed concrete
- Backfill
- Staking and line set
- Subgrade preparation
- Compaction
- Placement of select fill for leveling and forming
- Forming
- Expansion joint material
- Concrete
- Finishing
- Curing
- Cold weather protection

18. Remove and Replace Curb and Gutter Type 2 (Slip Form) (LF)

DESCRIPTION

This work consists of the removal of existing curb and gutter (any type) and construction of Curb and Gutter Type 2 (Slip Form) in a similar location by use of a concrete slipform machine.

MATERIAL AND CONSTRUCTION REQUIREMENTS

Work shall meet the requirements of:
- Sections 220 and 500 of the City Standard Specifications
- City Standard Drawing D-6

Slip form equipment shall be pre-approved by the Project Manager prior to use. All equipment and machinery shall be kept in good working order, be free of leaks, properly muffled, and have automatic sensor controls for line and grade which operate from an offset control line. Slip form equipment shall be equipped with traveling side forms of sufficient dimension, shape, and strength to support curb and gutter laterally for a sufficient length of time during placement to produce the required finished cross section. No abrupt changes in longitudinal alignment of the pavement will be permitted. The horizontal deviation shall not exceed 0.04 foot from the alignment established by the City.

METHOD OF MEASUREMENT

Quantity will be measured by linear feet of installed curb and gutter, measured along the front face of curb at the flowline of the gutter. Measurements will be made along the finished surface and are not constrained to the horizontal or vertical plane.

Included in Measurement
- Transitions between types of curb and gutter will be measured. Each type will be measured to the midway point of the transition.
- Curb and gutter will be measured through or around the following:
  - Squared returns
  - Plowable end sections
  - Openings for pedestrian ramps
  - Driveways

Excluded from Measurement
- Curb and gutter that is placed as part of a drainage structure will not be measured but shall be included in the cost of the drainage structure.
- Curb and gutter that is removed and not replaced will not be measured under this Contract Item.

BASIS OF PAYMENT

Payment will be made at the contract unit price and shall include full compensation for all labor, equipment, tools, and materials necessary to complete the work including but not limited to the following:

- Sawcutting
- Containment of sawcut slurry and dust
- Removal and off-site disposal of removed materials and debris
- Excavation
- Scarification, recompaction, and stabilization of the top six (6) inches of subgrade beneath the base of the constructed concrete
- Backfill
- Staking and line set
- Subgrade preparation
- Compaction
- Placement of select fill for leveling and forming
- Forming
- Expansion joint material
- Concrete
- Finishing
- Curing
- Cold weather protection

19. Remove and Replace Curb and Gutter Type 3 (Slip Form) (LF)

DESCRIPTION

This work consists of the removal of existing curb and gutter (any type) and construction of Curb and Gutter Type 3 (Slip Form) in a similar location by use of a concrete slipform machine.

MATERIAL AND CONSTRUCTION REQUIREMENTS

Work shall meet the requirements of:
- Sections 220 and 500 of the City Standard Specifications
- City Standard Drawing D-6

Slip form equipment shall be pre-approved by the Project Manager prior to use. All equipment and machinery shall be kept in good working order, be free of leaks, properly muffled, and have automatic sensor controls for line and grade which operate from an offset control line. Slip form equipment shall be equipped with traveling side forms of sufficient dimension, shape, and strength to support curb and gutter laterally for a sufficient length of time during placement to produce the required finished cross section. No abrupt changes in longitudinal alignment of the pavement will be permitted. The horizontal deviation shall not exceed 0.04 foot from the alignment established by the City.

METHOD OF MEASUREMENT

Quantity will be measured by linear feet of installed curb and gutter, measured along the front face of curb at the flowline of the gutter. Measurements will be made along the finished surface and are not constrained to the horizontal or vertical plane.

Included in Measurement
- Transitions between types of curb and gutter will be measured. Each type will be measured to the midway point of the transition.
- Curb and gutter will be measured through or around the following:
  - Squared returns
  - Plowable end sections
  - Openings for pedestrian ramps
  - Driveways

Excluded from Measurement
- Curb and gutter that is placed as part of a drainage structure will not be measured but shall be included in the cost of the drainage structure.
- Curb and gutter that is removed and not replaced will not be measured under this Contract Item.

BASIS OF PAYMENT

Payment will be made at the contract unit price and shall include full compensation for all labor, equipment, tools, and materials necessary to complete the work including but not limited to the following:

- Sawcutting
- Containment of sawcut slurry and dust
- Removal and off-site disposal of removed materials and debris
- Excavation
- Scarification, recompaction, and stabilization of the top six (6) inches of subgrade beneath the base of the constructed concrete
- Backfill
- Staking and line set
- Subgrade preparation
- Compaction
- Placement of select fill for leveling and forming
- Forming
- Expansion joint material
- Concrete
- Finishing
- Curing
- Cold weather protection

20. Curb Head (up to 8-inch) (LF)

DESCRIPTION

This work consists of construction of a concrete curb head with less than or equal to eight (8) inches of exposed face.

MATERIAL AND CONSTRUCTION REQUIREMENTS

Work shall meet the requirements of:
- Section 500 of the City Standard Specifications
- City Standard Drawings

Curb head shall be constructed with a uniform width no less than six (6) inches wide. Curb head height may be varied to suit site conditions as approved by the Inspector up to a maximum height of eight (8) inches as measured along the exposed front face of the curb head.

Curb head shall be embedded into suitable subgrade a minimum of six (6) inches.

METHOD OF MEASUREMENT

Quantity will be measured by linear feet of installed curb head, measured along the centerline top of the curb head. Measurements will be made along the finished surface and are not constrained to the horizontal or vertical plane.

Included in Measurement
- Curb head with variable or inconsistent heights will be measured equally.
- Curb head wing transitions for curb ramps

Excluded from Measurement
- Curb head that is placed as part of a monolithic curb and gutter section will not be measured for payment with this item but shall be measured as combination curb and gutter.

BASIS OF PAYMENT

Payment will be made at the contract unit price and shall include full compensation for all labor, equipment, tools, and materials necessary to complete the work including but not limited to the following:

- Sawcutting
- Containment of sawcut slurry and dust
- Removal and off-site disposal of removed materials and debris
- Excavation
- Scarification, recompaction, and stabilization of the top six (6) inches of subgrade beneath the base of the constructed concrete
- Backfill
- Staking and line set
- Subgrade preparation
- Compaction
- Placement of select fill for leveling and forming
- Forming
- Expansion joint material
- Concrete
- Finishing
- Curing
- Cold weather protection

21. Curb Head (up to 8-inch) (Reinforced) (LF)

DESCRIPTION

This work consists of construction of a reinforced curb head with less than or equal to eight (8) inches of exposed face.

MATERIAL AND CONSTRUCTION REQUIREMENTS

Work shall meet the requirements of:
- Section 500 of the City Standard Specifications
- City Standard Drawings

Curb head shall be constructed with a uniform width no less than six (6) inches wide. Steel reinforcement shall be #4 bars at eighteen (18) inches on center each direction placed on chairs at the center of the concrete thickness. Curb head height may be varied to suit site conditions as approved by the Inspector up to a maximum height of eight (8) inches as measured along the exposed front face of the curb head.

Curb head shall be embedded into suitable subgrade a minimum of six (6) inches.

METHOD OF MEASUREMENT

Quantity will be measured by linear feet of installed curb head, measured along the centerline top of the curb head. Measurements will be made along the finished surface and are not constrained to the horizontal or vertical plane.

Included in Measurement
- Curb head with variable or inconsistent heights will be measured equally
- Curb head wing transitions for curb ramps.

Excluded from Measurement
- Curb head that is placed as part of a monolithic curb and gutter section will not be measured for payment with this item but shall be measured as combination curb and gutter.

BASIS OF PAYMENT

Payment will be made at the contract unit price and shall include full compensation for all labor, equipment, tools, and materials necessary to complete the work including but not limited to the following:

- Sawcutting
- Containment of sawcut slurry and dust
- Removal and off-site disposal of removed materials and debris
- Excavation
- Scarification, recompaction, and stabilization of the top six (6) inches of subgrade beneath the base of the constructed concrete
- Backfill
- Reinforcement
- Subgrade preparation
- Compaction
- Placement of select fill for leveling and forming
- Forming
- Expansion joint material
- Concrete
- Finishing
- Curing
- Staking and line set
- Cold weather protection

22. Remove and Replace Concrete (4-inch) (SF)

DESCRIPTION

This work consists of the removal of existing concrete surface up to four (4) inches thick and construction of concrete surface four (4) inches thick in a similar location.

MATERIAL AND CONSTRUCTION REQUIREMENTS

Work shall meet the requirements of:
- Sections 220 and 500 of the City Standard Specifications
- City Standard Drawings

METHOD OF MEASUREMENT

Quantity will be measured by square foot of concrete surface installed and accepted. Measurements will be constrained to the horizontal plane; additional quantity will not be added for inconsistently sloped (non-flat) finished surfaces with grade breaks or surface texture.

Removed material will not be measured.

BASIS OF PAYMENT

Payment will be made at the contract unit price and shall include full compensation for all labor, equipment, tools, and materials necessary to complete the work including but not limited to the following:

- Sawcutting
- Containment of sawcut slurry and dust
- Removal and off-site disposal of removed materials and debris
- Excavation
- Scarification, recompaction, and stabilization of the top six (6) inches of subgrade beneath the base of the constructed concrete
- Backfill
- Staking and line set
- Subgrade preparation
- Compaction
- Placement of select fill for leveling and forming
- Forming
- Expansion joint material
- Concrete
- Finishing
- Curing
- Cold weather protection

23. Remove and Replace Concrete (6-inch) (SF)

DESCRIPTION

This work consists of the removal of existing concrete surface up to six (6) inches thick and construction of concrete surface six (6) inches thick in a similar location.

MATERIAL AND CONSTRUCTION REQUIREMENTS

Work shall meet the requirements of:
- Sections 220 and 500 of the City Standard Specifications
- City Standard Drawings

METHOD OF MEASUREMENT

Quantity will be measured by square foot of concrete surface installed and accepted. Measurements will be constrained to the horizontal plane; additional quantity will not be added for inconsistently sloped (non-flat) finished surfaces with grade breaks or surface texture.

Removed material will not be measured.

BASIS OF PAYMENT

Payment will be made at the contract unit price and shall include full compensation for all labor, equipment, tools, and materials necessary to complete the work including but not limited to the following:

- Sawcutting
- Containment of sawcut slurry and dust
- Removal and off-site disposal of removed materials and debris
- Excavation
- Scarification, recompaction, and stabilization of the top six (6) inches of subgrade beneath the base of the constructed concrete
- Backfill
- Staking and line set
- Subgrade preparation
- Compaction
- Placement of select fill for leveling and forming
- Forming
- Expansion joint material
- Concrete
- Finishing
- Curing
- Cold weather protection

24. Remove and Replace Concrete (8-inch Reinforced) (SF)

DESCRIPTION

This work consists of the removal of existing concrete surface up to eight (8) inches thick and construction of reinforced concrete surface eight (8) inches thick in a similar location.

MATERIAL AND CONSTRUCTION REQUIREMENTS

Work shall meet the requirements of:
- Sections 220 and 500 of the City Standard Specifications
- City Standard Drawings

Steel reinforcement shall be #4 bars at eighteen (18) inches on center each direction placed on chairs at the center of the concrete thickness.

METHOD OF MEASUREMENT

Quantity will be measured by square foot of reinforced concrete surface installed and accepted. Measurements will be constrained to the horizontal plane; additional quantity will not be added for inconsistently sloped (non-flat) finished surfaces with grade breaks or surface texture.

Removed material will not be measured.

Squared returns will be measured using the detail and formula below:

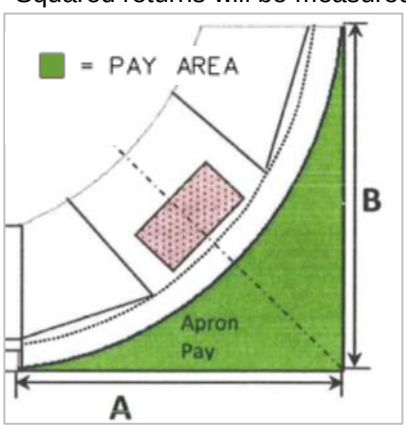

Measurements
A = Length along outside of squared return from PC of curb return to B.
B = Length along outside of squared return from PT of curb return to A.

Abbreviations
PC = Point of curvature; point where the curve begins and curb is no longer parallel to the street.
PT = Point of tangency; point where the curve ends and curb becomes parallel to the street.

Calculations

$$Pay\ Area = A \times B \times 0.215$$

BASIS OF PAYMENT

Payment will be made at the contract unit price and shall include full compensation for all labor, equipment, tools, and materials necessary to complete the work including but not limited to the following:

- Sawcutting
- Containment of sawcut slurry and dust
- Removal and off-site disposal of removed materials and debris
- Excavation
- Scarification, recompaction, and stabilization of the top six (6) inches of subgrade beneath the base of the constructed concrete
- Backfill
- Reinforcement
- Subgrade preparation
- Compaction
- Placement of select fill for leveling and forming
- Forming
- Expansion joint material
- Concrete
- Finishing
- Curing
- Staking and line set
- Cold weather protection

25. Remove and Replace Curb Ramp (6-inch) (SF)

DESCRIPTION

This work consists of the removal of an existing concrete curb ramp or concrete up to six (6) inches thick and construction of a concrete pedestrian curb ramp six (6) inches thick. Detectable warning surface panels are measured and paid for under a separate Contract Item.

MATERIAL AND CONSTRUCTION REQUIREMENTS

Work shall meet the requirements of:
- Sections 220 and 500 of the City Standard Specifications
- City Standard Drawing D-8

METHOD OF MEASUREMENT

Quantity will be measured by square foot of installed concrete curb ramp surface installed and accepted.

Included in Measurement
- Wings and flares
- Detectable warning surface area
- Turning spaces for Type 3A, 3B, 4A, 4B, 4C, and 4D curb ramps

Excluded from Measurement
- Removed material and existing ramp
- Curb head and curb head wing transitions
- Turning spaces for Type 1 and Type 2 curb ramps.
- Detectable warning surface panels

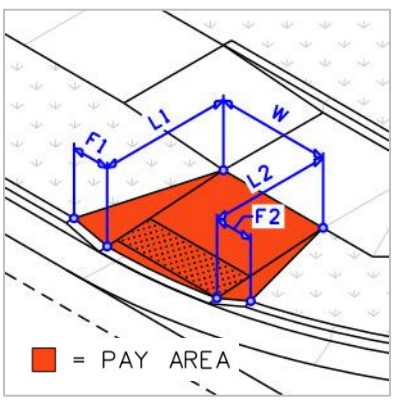

Measurements

W = Width of constructed ramp between flares
$L1$ and $L2$ = Length of ramp from top of ramp to back of curb
$F1$ and $F2$ = Flare width at back of curb

All measurements will be made along the slope of the finished surface.

Calculations

$$Pay\ Area = \frac{(F1 \times L1) + (F2 \times L2) + [(L1 + L2) \times W]}{2}$$

BASIS OF PAYMENT

Payment will be made at the contract unit price and shall include full compensation for all labor, equipment, tools, and materials necessary to complete the work including but not limited to the following:

- Sawcutting
- Containment of sawcut slurry and dust
- Removal and off-site disposal of removed materials and debris
- Excavation
- Scarification, recompaction, and stabilization of the top six (6) inches of subgrade beneath the base of the constructed concrete
- Backfill
- Staking and line set
- Subgrade preparation
- Compaction
- Placement of select fill for leveling and forming
- Forming
- Expansion joint material
- Concrete
- Finishing
- Curing
- Cold weather protection

26. Remove and Replace Curb Ramp (8-inch Reinforced) (SF)

DESCRIPTION

This work consists of the removal of an existing concrete curb ramp or concrete up to eight (8) inches thick and construction of a reinforced concrete pedestrian curb ramp eight (8) inches thick. Detectable warning surface panels are measured and paid for under a separate Contract Item.

MATERIAL AND CONSTRUCTION REQUIREMENTS

Work shall meet the requirements of:
- Sections 220 and 500 of the City Standard Specifications
- City Standard Drawing D-8

METHOD OF MEASUREMENT

Quantity will be measured by square foot of installed concrete curb ramp surface installed and accepted.

Included in Measurement
- Wings and flares
- Detectable warning surface area
- Turning spaces for Type 3A, 3B, 4A, 4B, 4C, and 4D curb ramps

Excluded from Measurement
- Removed material and existing ramp
- Curb head and curb head wing transitions
- Turning spaces for Type 1 and Type 2 curb ramps.
- Detectable warning surface panels

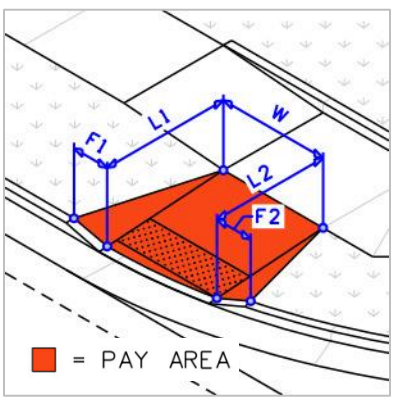

Measurements

W = Width of constructed ramp between flares
$L1$ and $L2$ = Length of ramp from top of ramp to back of curb
$F1$ and $F2$ = Flare width at back of curb

All measurements will be made along the slope of the finished surface.

Calculations

$$Pay\ Area = \frac{(F1 \times L1) + (F2 \times L2) + [(L1 + L2) \times W]}{2}$$

BASIS OF PAYMENT

Payment will be made at the contract unit price and shall include full compensation for all labor, equipment, tools, and materials necessary to complete the work including but not limited to the following:

- Sawcutting
- Containment of sawcut slurry and dust
- Removal and off-site disposal of removed materials and debris
- Excavation
- Scarification, recompaction, and stabilization of the top six (6) inches of subgrade beneath the base of the constructed concrete
- Backfill
- Staking and line set
- Subgrade preparation
- Compaction
- Placement of select fill for leveling and forming
- Forming
- Expansion joint material
- Concrete
- Finishing
- Curing
- Reinforcement
- Cold weather protection

27. Detectable Warning Surface (Truncated Domes) (SF)

DESCRIPTION

This work consists of installation of detectable warning panels (truncated domes) for concrete pedestrian curb ramps.

MATERIAL AND CONSTRUCTION REQUIREMENTS

Work shall meet the requirements of:

- Section 500 of the City Standard Specifications
- City Standard Drawing D-8L
- City Truncated Dome Detectable Warning Materials Approved Product List
    - https://coloradosprings.gov/public-works/page/engineering-criteria-manuals-references?mlid=23896

METHOD OF MEASUREMENT

Quantity will be measured by square foot of detectable warning surface installed and accepted, as illustrated below:

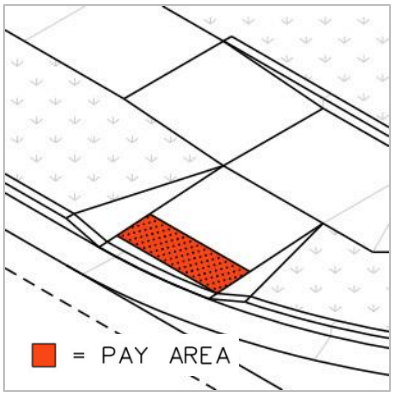

BASIS OF PAYMENT

Payment will be made at the contract unit price and shall include full compensation for all labor, equipment, tools, and materials necessary to complete the work including but not limited to the following:

- Sawcutting
- Layout
- Epoxy sealant
- Grade verification
- Detectable warning surface material
- Cutting/trimming panels to size and shape as needed

28. Patterned Concrete (4-inch) (Springs Brown) (SF)

DESCRIPTION

This work consists of construction of patterned concrete surface 4-inches thick integrally colored with “Santa Barbara Brown, C-35” or an approved equal.

MATERIAL AND CONSTRUCTION REQUIREMENTS

Work shall meet the requirements of:
- Section 500 of the City Standard Specifications
- City Standard Drawing D-24

Color additive shall be integral to the concrete and shall be approved by the City prior to use. Approximately five (5) pounds of color additive shall be used per sack of concrete.

METHOD OF MEASUREMENT

Quantity will be measured by square foot of patterned concrete surface installed and accepted.

BASIS OF PAYMENT

Payment will be made at the contract unit price and shall include full compensation for all labor, equipment, tools, and materials necessary to complete the work including but not limited to the following:

- Scarification, recompaction, and stabilization of the top six (6) inches of subgrade beneath the base of the constructed concrete
- Weed control
- Expansion joint material
- Membrane material
- Concrete and integral color
- Curing
- Backfill
- Subgrade preparation
- Excavation
- Compaction
- Placement of select fill for leveling and forming
- Forming
- Stamping
- Finishing
- Sealant
- Cold weather protection

29. Patterned Concrete (8-inch Reinforced) (Springs Brown) (SF)

DESCRIPTION

This work consists of construction of patterned reinforced concrete surface eight (8) inches thick integrally colored with “Santa Barbara Brown, C-35” or an approved equal.

MATERIAL AND CONSTRUCTION REQUIREMENTS

Work shall meet the requirements of:
- Section 500 of the City Standard Specifications
- City Standard Drawing D-24

Color additive shall be integral to the concrete and shall be approved by the City prior to use. Approximately five (5) pounds of color additive shall be used per sack of concrete.

METHOD OF MEASUREMENT

Quantity will be measured by square foot of patterned reinforced concrete surface installed and accepted.

Steel reinforcement shall be #4 bars at eight (8) inches on center each direction placed on chairs at the center of the concrete thickness.

BASIS OF PAYMENT

Payment will be made at the contract unit price and shall include full compensation for all labor, equipment, tools, and materials necessary to complete the work including but not limited to the following:

- Scarification, recompaction, and stabilization of the top six (6) inches of subgrade beneath the base of the constructed concrete
- Weed control
- Expansion joint material
- Membrane material
- Concrete and integral color
- Curing
- Backfill
- Subgrade preparation
- Excavation
- Compaction
- Placement of select fill for leveling and forming
- Forming
- Stamping
- Finishing
- Sealant
- Reinforcement
- Cold weather protection

30. Patterned Concrete (4-inch) (San Diego Buff) (SF)

DESCRIPTION

This work consists of construction of patterned concrete surface 4-inches thick integrally colored with “San Diego Buff” or an approved equal.

MATERIAL AND CONSTRUCTION REQUIREMENTS

Work shall meet the requirements of:
- Section 500 of the City Standard Specifications
- City Standard Drawing D-24

Color additive shall be integral to the concrete and shall be approved by the City prior to use. Approximately one (1) pound of color additive shall be used per sack of concrete.

METHOD OF MEASUREMENT

Quantity will be measured by square foot of patterned concrete surface installed and accepted.

BASIS OF PAYMENT

Payment will be made at the contract unit price and shall include full compensation for all labor, equipment, tools, and materials necessary to complete the work including but not limited to the following:

- Scarification, recompaction, and stabilization of the top six (6) inches of subgrade beneath the base of the constructed concrete
- Weed control
- Expansion joint material
- Membrane material
- Concrete and integral color
- Curing
- Backfill
- Subgrade preparation
- Excavation
- Compaction
- Placement of select fill for leveling and forming
- Forming
- Stamping
- Finishing
- Sealant
- Cold weather protection

31. Patterned Concrete (8-inch Reinforced) (San Diego Buff) (SF)

DESCRIPTION

This work consists of construction of patterned reinforced concrete surface eight (8) inches thick integrally colored with “San Diego Buff” or an approved equal.

MATERIAL AND CONSTRUCTION REQUIREMENTS

Work shall meet the requirements of:
- Section 500 of the City Standard Specifications
- City Standard Drawing D-24

Color additive shall be integral to the concrete and shall be approved by the City prior to use. Approximately one (1) pound of color additive shall be used per sack of concrete.

METHOD OF MEASUREMENT

Quantity will be measured by square foot of patterned reinforced concrete surface installed and accepted.

Steel reinforcement shall be #4 bars at eight (8) inches on center each direction placed on chairs at the center of the concrete thickness.

BASIS OF PAYMENT

Payment will be made at the contract unit price and shall include full compensation for all labor, equipment, tools, and materials necessary to complete the work including but not limited to the following:

- Scarification, recompaction, and stabilization of the top six (6) inches of subgrade beneath the base of the constructed concrete
- Weed control
- Expansion joint material
- Membrane material
- Concrete and integral color
- Curing
- Backfill
- Subgrade preparation
- Excavation
- Compaction
- Placement of select fill for leveling and forming
- Forming
- Stamping
- Finishing
- Sealant
- Reinforcement
- Cold weather protection

32. Patterned Concrete (4-inch) (Cobblestone) (SF)

DESCRIPTION

This work consists of construction of patterned concrete surface 4-inches thick integrally colored with "Cobblestone" or an approved equal.

MATERIAL AND CONSTRUCTION REQUIREMENTS

Work shall meet the requirements of:
- Section 500 of the City Standard Specifications
- City Standard Drawing D-24

Color additive shall be integral to the concrete and shall be approved by the City prior to use. Approximately two (2) pounds of color additive shall be used per sack of concrete.

METHOD OF MEASUREMENT

Quantity will be measured by square foot of patterned concrete surface installed and accepted.

BASIS OF PAYMENT

Payment will be made at the contract unit price and shall include full compensation for all labor, equipment, tools, and materials necessary to complete the work including but not limited to the following:

- Scarification, recompaction, and stabilization of the top six (6) inches of subgrade beneath the base of the constructed concrete
- Weed control
- Expansion joint material
- Membrane material
- Concrete and integral color
- Curing
- Backfill
- Subgrade preparation
- Excavation
- Compaction
- Placement of select fill for leveling and forming
- Forming
- Stamping
- Finishing
- Sealant
- Cold weather protection

33. Patterned Concrete (8-inch Reinforced) (Cobblestone) (SF)

DESCRIPTION

This work consists of construction of patterned reinforced concrete surface eight (8) inches thick integrally colored with “Cobblestone” or an approved equal.

MATERIAL AND CONSTRUCTION REQUIREMENTS

Work shall meet the requirements of:
- Section 500 of the City Standard Specifications
- City Standard Drawing D-24

Color additive shall be integral to the concrete and shall be approved by the City prior to use. Approximately two (2) pounds of color additive shall be used per sack of concrete.

METHOD OF MEASUREMENT

Quantity will be measured by square foot of patterned reinforced concrete surface installed and accepted.

Steel reinforcement shall be #4 bars at eight (8) inches on center each direction placed on chairs at the center of the concrete thickness.

BASIS OF PAYMENT

Payment will be made at the contract unit price and shall include full compensation for all labor, equipment, tools, and materials necessary to complete the work including but not limited to the following:

- Scarification, recompaction, and stabilization of the top six (6) inches of subgrade beneath the base of the constructed concrete
- Weed control
- Expansion joint material
- Membrane material
- Concrete and integral color
- Curing
- Backfill
- Subgrade preparation
- Excavation
- Compaction
- Placement of select fill for leveling and forming
- Forming
- Stamping
- Finishing
- Sealant
- Reinforcement
- Cold weather protection

34. Remove Ground Cover Material (up to 8-inch) (SF)

DESCRIPTION

This work consists of the removal of ground cover material (up to eight (8) inches) including but not limited to asphalt, landscape rock, and hardscape materials. Removal of monolithic concrete is not included in this item.

MATERIAL AND CONSTRUCTION REQUIREMENTS

Work shall meet the requirements of:

- Section 220 of the City Standard Specifications

Aggregate base course (class 6) shall be placed in the space vacated by removed material. Base course shall be placed to an elevation two (2) inches below the adjacent finished surface.

METHOD OF MEASUREMENT

Quantity will be measured by square foot of surface material removed and accepted at the top of the existing surface. Measurements will be constrained to the horizontal plane; additional quantity will not be added for inconsistently sloped (non-flat) surfaces with grade breaks or surface texture.

Quantity will not be measured for work areas coupled with a remove and replace Contract Item.

BASIS OF PAYMENT

Payment will be made at the contract unit price and shall include full compensation for all labor, equipment, tools, and materials necessary to complete the work including but not limited to the following:

- Sawcutting
- Removal and off-site disposal of removed materials and debris
- Backfill and compaction
- Cleaning of debris from surfaces not removed
- Aggregate base course

35. Remove Curb and Gutter (Any Type) (LF)

DESCRIPTION

This work consists of the removal of existing concrete curb and gutter (any type) in locations where curb and gutter is removed but not replaced.

MATERIAL AND CONSTRUCTION REQUIREMENTS

Work shall meet the requirements of:

- Section 220 of the City Standard Specifications

Aggregate base course (class 6) shall be used to backfill or level to original grade, if necessary.

METHOD OF MEASUREMENT

Quantity will be measured by linear feet of curb and gutter removed, measured along the front face of removed curb and gutter at the flowline of the removed gutter.

All measurements will be made along the existing surface and are not constrained to the horizontal or vertical plane.

Quantity will not be measured for work areas coupled with a remove and replace bid item.

BASIS OF PAYMENT

Payment will be made at the contract unit price and shall include full compensation for all labor, equipment, tools, and materials necessary to complete the work including but not limited to the following:

- Sawcutting
- Removal and off-site disposal of removed materials and debris
- Backfill and compaction
- Cleaning of debris from surfaces not removed
- Aggregate base course
- Containment of sawcut slurry and dust

36. Remove Concrete (up to 4-inch) (SF)

DESCRIPTION

This work consists of the removal of concrete up to 4-inches thick where concrete is removed but not replaced.

MATERIAL AND CONSTRUCTION REQUIREMENTS

Work shall meet the requirements of:

- Section 220 of the City Standard Specifications

Aggregate base course (class 6) shall be placed in the space vacated by removed material. Base course shall be placed to an elevation two inches below the adjacent finished surface.

METHOD OF MEASUREMENT

Quantity will be measured by square foot of concrete surface removed and accepted at the top of the existing surface. Measurements will be constrained to the horizontal plane; additional quantity will not be added for inconsistently sloped (non-flat) surfaces with grade breaks or surface texture.

Quantity will not be measured for work areas coupled with a remove and replace bid item.

BASIS OF PAYMENT

Payment will be made at the contract unit price and shall include full compensation for all labor, equipment, tools, and materials necessary to complete the work including but not limited to the following:

- Sawcutting
- Removal and off-site disposal of removed materials and debris
- Backfill and compaction
- Cleaning of debris from surfaces not removed
- Aggregate base course
- Containment of sawcut slurry and dust

37. Fast Track Concrete (Accelerant) (CY)

DESCRIPTION

This item is intended to provide compensation for the additional cost of fast track concrete compared to regular concrete. This item is used in addition to other concrete placement contract items when fast track concrete is approved for use by the City.

MATERIAL AND CONSTRUCTION REQUIREMENTS

Work shall meet the requirements of:

- Section 600 of the City Standard Specifications

The Contractor shall receive approval from the City for use of fast track concrete prior to use. The concrete mix shall be approved by the City for use as fast track concrete prior to use.

METHOD OF MEASUREMENT

Quantity will be measured by the number of cubic yards of fast track concrete placed and accepted.

If an entire truck load is placed and accepted, the quantity for the truck load will equal the certified material ticket for the load provided by the ready-mix concrete supplier.

If a portion of a truck load is placed and accepted, the quantity will be measured as the volume placed and accepted. This measurement will be calculated as the product of the depth, length, and width of concrete. In no case will the measured volume exceed the volume reported by the certified material ticket for the load provided by the ready-mix concrete supplier.

BASIS OF PAYMENT

Payment shall be full compensation for the “upcharge” of using Fast Track Concrete in lieu of standard concrete mix. Use of Fast Track Concrete integrated into standard contract items does not change or impact measurement and payment of those items.

Payment for Fast Track Concrete will only be made if use is pre-approved by the City Project Manager in writing to expedite the work to the benefit of the City. Use of Fast Track Concrete by the Contractor at their convenience or without pre-approval will not be paid for but shall be at the Contractor’s expense.

38. Remove Asphalt (up to 6-inch) (SF)

DESCRIPTION

This work consists of the removing existing asphalt pavement up to six (6) inches thick where asphalt is removed but not replaced.

MATERIAL AND CONSTRUCTION REQUIREMENTS

Work shall meet the requirements of:

- Section 220 of the City Standard Specifications

Aggregate base course (class 6) shall be used to backfill or level to original grade, if necessary.

METHOD OF MEASUREMENT

Quantity will be measured by square foot of asphalt surface removed and accepted at the top of the existing surface. Measurements will be constrained to the horizontal plane; additional quantity will not be added for inconsistently sloped (non-flat) surfaces with grade breaks or surface texture.

Quantity will not be measured for work areas coupled with a remove and replace bid item.

BASIS OF PAYMENT

Payment will be made at the contract unit price and shall include full compensation for all labor, equipment, tools, and materials necessary to complete the work including but not limited to the following:

- Sawcutting
- Removal and off-site disposal of removed materials and debris
- Backfill and compaction
- Containment of sawcut slurry and dust
- Cleaning of debris from surfaces not removed
- Aggregate base course

39. Remove and Replace Asphalt (Patching) (6-inch) (SF)

DESCRIPTION

This work consists of the removal of existing asphalt pavement up to six (6) inches thick and installation of asphalt patching six (6) inches thick.

MATERIAL AND CONSTRUCTION REQUIREMENTS

Work shall meet the requirements of:
- Sections 220 and 400 of the City Standard Specifications
- Pikes Peak Region Asphalt Paving Specifications
- City Standard Drawing D-3

METHOD OF MEASUREMENT

Quantity will be measured by square foot of asphalt patching installed and accepted at the top of the finished surface. Removed material will not be measured.

BASIS OF PAYMENT

Payment will be made at the contract unit price and shall include full compensation for all labor, equipment, tools, and materials necessary to complete the work including but not limited to the following:

- Sawcutting
- Removal and off-site disposal of removed materials and debris
- Backfill and compaction
- Subgrade preparation
- Asphalt
- Hauling
- Cleaning of debris from surfaces not removed
- Aggregate base course
- Scarification, recompaction, and stabilization of the top six (6) inches of subgrade beneath the base of the constructed asphalt
- Compaction
- Tack coat
- Placement to original grade

40. Aggregate Base Course (Class 6) (CY)

DESCRIPTION

This work consists of placement of aggregate base course (class 6) when not included in a different item. Excavation is not included the work.

MATERIAL AND CONSTRUCTION REQUIREMENTS

Work shall meet the requirements of:

- Section 300 of the City Standard Specifications

METHOD OF MEASUREMENT

Quantity will be measured by cubic yards of aggregate base course placed and accepted. This measurement will be calculated as the product of the depth, length, and width of the aggregate base course section.

BASIS OF PAYMENT

Payment will be made at the contract unit price and shall include full compensation for all labor, equipment, tools, and materials necessary to complete the work including but not limited to the following:

- Hauling
- Spreading
- Water
- Grading
- Proof-rolling
- Compaction

Excavation is not included and will be paid separately.

41. Aggregate Base Course (Class 6) (Excavation Included) (CY)

DESCRIPTION

This work consists of excavation of existing subgrade and placement of aggregate base course (class 6) in a similar location when not included in a different item.

MATERIAL AND CONSTRUCTION REQUIREMENTS

Work shall meet the requirements of:

- Sections 220 and 300 of the City Standard Specifications

METHOD OF MEASUREMENT

Quantity will be measured by cubic yards of material excavated and accepted prior to placement of aggregate base course. This measurement will be calculated as the product of the depth, length, and width of the excavated volume.

BASIS OF PAYMENT

Payment will be made at the contract unit price and shall include full compensation for all labor, equipment, tools, and materials necessary to complete the work including but not limited to the following:

- Hauling
- Spreading
- Water
- Excavation
- Grading
- Proof-rolling
- Compaction
- Removal and off-site disposal of removed materials and debris

42. Remove and Replace Inlet Apron (8-inch Reinforced) (SF)

DESCRIPTION

This work consists of the removal of a reinforced concrete inlet apron and construction of a new 8-inch thick reinforced concrete inlet apron in the same location.

MATERIAL AND CONSTRUCTION REQUIREMENTS

Work shall meet the requirements of:
- Sections 220 and 600 of the City Standard Specifications
- City Standard Drawings for the inlet type

METHOD OF MEASUREMENT

Quantity will be measured by square feet of inlet apron constructed and accepted.

Included in Measurement
- Gutter transitions
- Gutter outside of the inlet

Excluded from Measurement
- Removed material
- Curb head

BASIS OF PAYMENT

Payment will be made at the contract unit price and shall include full compensation for all labor, equipment, tools, and materials necessary to complete the work including but not limited to the following:

- Sawcutting
- Containment of sawcut slurry and dust
- Removal and off-site disposal of removed materials and debris
- Compaction
- Placement of select fill for leveling and forming
- Forming
- Backfill
- Reinforcement
- Excavation
- Subgrade preparation
- Scarification, recompaction, and stabilization of the top six (6) inches of subgrade beneath the base of the constructed concrete
- Expansion joint material
- Concrete
- Finishing
- Curing
- Cold weather protection

43. Remove and Replace Inlet Deck (6-inch Reinforced) (SF)

DESCRIPTION

This work consists of the removal of a reinforced concrete inlet deck and construction of a new 6-inch thick reinforced concrete inlet deck in the same location.

MATERIAL AND CONSTRUCTION REQUIREMENTS

Work shall meet the requirements of:
- Sections 220 and 600 of the City Standard Specifications
- City Standard Drawings for the inlet type

METHOD OF MEASUREMENT

Quantity will be measured by square feet of inlet deck constructed and accepted. Measurements will be made along the outside surface of the finished inlet deck.

Removed material will not be measured.

BASIS OF PAYMENT

Payment will be made at the contract unit price and shall include full compensation for all labor, equipment, tools, and materials necessary to complete the work including but not limited to the following:

- Sawcutting
- Containment of sawcut slurry and dust
- Removal and off-site disposal of removed materials and debris
- Forming
- Reinforcement
- Integral face plate including paint
- Cold weather protection
- Expansion joint material
- Concrete
- Finishing
- Curing
- Manhole ring and cover
- Shoring
- Backfill

44. Remove and Replace Inlet Wall (6-inch Reinforced) (no pipe penetration) (SF)

DESCRIPTION

This work consists of the removal of a reinforced concrete inlet wall and construction of a new 6-inch thick reinforced concrete inlet wall without any pipe openings in the same location.

MATERIAL AND CONSTRUCTION REQUIREMENTS

Work shall meet the requirements of:
- Sections 220 and 600 of the City Standard Specifications
- City Standard Drawings for the inlet type

METHOD OF MEASUREMENT

Quantity will be measured by square feet of inlet wall constructed and accepted. Measurements will be made along the inside surface of the constructed wall to the adjacent walls, floor, and deck.

Removed material will not be measured.

BASIS OF PAYMENT

Payment will be made at the contract unit price and shall include full compensation for all labor, equipment, tools, and materials necessary to complete the work including but not limited to the following:

- Sawcutting
- Containment of sawcut slurry and dust
- Removal and off-site disposal of removed materials and debris
- Compaction
- Placement of select fill for leveling and forming
- Forming
- Backfill
- Reinforcement
- Grout
- Steps
- Excavation
- Subgrade preparation
- Scarification, recompaction, and stabilization of the top six (6) inches of subgrade beneath the base of the constructed concrete
- Expansion joint material
- Concrete
- Finishing
- Curing
- Shoring
- Cold weather protection

45. Remove and Replace Inlet Wall (6-inch Reinforced) (with pipe/s penetration) (SF)

DESCRIPTION

This work consists of the removal of a reinforced concrete inlet wall and construction of a new 6-inch thick reinforced concrete inlet wall with pipe openings in the same location.

MATERIAL AND CONSTRUCTION REQUIREMENTS

Work shall meet the requirements of:
- Sections 220 and 600 of the City Standard Specifications
- City Standard Drawings for the inlet type

METHOD OF MEASUREMENT

Quantity will be measured by square feet of inlet wall constructed and accepted. Measurements will be made along the inside surface of the constructed wall to the adjacent walls, floor, and deck.

Removed material will not be measured.

BASIS OF PAYMENT

Payment will be made at the contract unit price and shall include full compensation for all labor, equipment, tools, and materials necessary to complete the work including but not limited to the following:

- Sawcutting
- Containment of sawcut slurry and dust
- Removal and off-site disposal of removed materials and debris
- Compaction
- Placement of select fill for leveling and forming
- Forming
- Backfill
- Reinforcement
- Grout
- Steps
- Excavation
- Subgrade preparation
- Scarification, recompaction, and stabilization of the top six (6) inches of subgrade beneath the base of the constructed concrete
- Expansion joint material
- Concrete
- Finishing
- Curing
- Shoring
- Cold weather protection

46. Remove and Replace Inlet Floor (8-inch Reinforced) (SF)

DESCRIPTION

This work consists of the removal of a reinforced concrete inlet floor and construction of a new 8-inch thick reinforced concrete inlet floor in the same location.

MATERIAL AND CONSTRUCTION REQUIREMENTS

Work shall meet the requirements of:
- Sections 220 and 600 of the City Standard Specifications
- City Standard Drawings for the inlet type

METHOD OF MEASUREMENT

Quantity will be measured by square feet of inlet floor constructed and accepted. Measurement will be made along the inside surface of the constructed floor to the adjacent walls.

Removed materials will not be measured

BASIS OF PAYMENT

Payment will be made at the contract unit price and shall include full compensation for all labor, equipment, tools, and materials necessary to complete the work including but not limited to the following:

- Sawcutting
- Containment of sawcut slurry and dust
- Removal and off-site disposal of removed materials and debris
- Compaction
- Placement of select fill for leveling and forming
- Forming
- Backfill
- Reinforcement
- Excavation
- Subgrade preparation
- Scarification, recompaction, and stabilization of the top six (6) inches of subgrade beneath the base of the constructed concrete
- Expansion joint material
- Concrete
- Finishing
- Curing
- Shoring
- Cold weather protection

47. Remove Bubbler (EA)

DESCRIPTION

This work consists of the removal of a bubbler inlet box including backfill of the excavation void after removal of the bubbler.

A bubbler inlet is a grate / area inlet that behaves as a siphon, typically to convey stormwater from one side of a street to the gutter on the other. The term “bubbler” can be used to describe the stormwater structure on the upstream and downstream ends of the siphon.

MATERIAL AND CONSTRUCTION REQUIREMENTS

Work shall meet the requirements of:
- Section 220 of the City Standard Specifications

METHOD OF MEASUREMENT

Quantity will be measured by the number of bubbler inlets removed and accepted.

BASIS OF PAYMENT

Payment will be made at the contract unit price and shall include full compensation for all labor, equipment, tools, and materials necessary to complete the work including but not limited to the following:

- Sawcutting
- Containment of sawcut slurry and dust
- Removal and off-site disposal of removed materials and debris
- Concrete
- Reinforcement
- Excavation
- Subgrade preparation
- Scarification, recompaction, and stabilization of the top six (6) inches of subgrade beneath the base of the constructed concrete
- Backfill of excavation void with aggregate base course (class 6)

48. Abandon Culvert (Flowfill) (CY)

DESCRIPTION

This work consists of abandoning a culvert less than or equal to 18 inches in diameter with flowfill. Typically used in combination with Remove Bubbler item.

MATERIAL AND CONSTRUCTION REQUIREMENTS

Work shall meet the requirements of:

- Section 220 of the City Standard Specifications

Controlled low-strength material (flowable fill) used to fill pipe shall be a City pre-approved mix design.

METHOD OF MEASUREMENT

Quantity will be measured by cubic yards of flowfill placed and accepted. Flowfill will not be directly measured and will be determined by material tickets provided by the ready-mix concrete supplier.

BASIS OF PAYMENT

Payment will be made at the contract unit price and shall include full compensation for all labor, equipment, tools, and materials necessary to complete the work including but not limited to the following:

- Flowfill
- Pumping/placement
- Shoring
- Compaction
- Dewatering
- Excavation of pipe ends
- Bulkheads
- Backfill

49. Remove Chase Drain (SF)

DESCRIPTION

This work consists of the removal of a stormwater chase drain structure including ancillary metal.

MATERIAL AND CONSTRUCTION REQUIREMENTS

Work shall meet the requirements of:
- Section 220 of the City Standard Specifications

The existing cover plate shall be protected if reset is viable and desired as determined by the Inspector.

METHOD OF MEASUREMENT

Quantity will be measured by square feet of chase drain cover removed and accepted. Measurements will be made at the exposed surface of the existing chase drain cover.

BASIS OF PAYMENT

Payment will be made at the contract unit price and shall include full compensation for all labor, equipment, tools, and materials necessary to complete the work including but not limited to the following:

- Sawcutting
- Containment of sawcut slurry and dust
- Removal and off-site disposal of removed materials and debris
- Protection of existing plate if reset is viable
- Backfill
- Compaction

50. Chase Drain (Angle Iron) (LF)

DESCRIPTION

This work consists of construction of the angle iron component of a chase drain curb opening.

MATERIAL AND CONSTRUCTION REQUIREMENTS

Work shall meet the requirements of:
- Section 500 of the City Standard Specifications
- City Standard Drawing D-21

METHOD OF MEASUREMENT

Quantity will be measured by linear feet of angle iron installed and accepted.

BASIS OF PAYMENT

Payment will be made at the contract unit price and shall include full compensation for all labor, equipment, tools, and materials necessary to complete the work including but not limited to the following:

- Forming
- Tack welds
- Ancillary steel including embeds
- Angle iron
- Zinc coating

51. Chase Drain (Galvanized Plate) (SF)

DESCRIPTION

This works consists of construction of the galvanized plate component of a chase drain curb opening.

MATERIAL AND CONSTRUCTION REQUIREMENTS

Work shall meet the requirements of:
- Section 500 of the City Standard Specifications
- City Standard Drawing D-21

METHOD OF MEASUREMENT

Quantity will be measured by square feet of chase drain galvanized plate installed and accepted as measured at the top of the exposed finished surface of the floor plate.

BASIS OF PAYMENT

Payment will be made at the contract unit price and shall include full compensation for all labor, equipment, tools, and materials necessary to complete the work including but not limited to the following:

- Forming
- Galvanized plate
- Ancillary steel
- Tack welds

52. Reset Chase Drain (Galvanized Plate) (SF)

DESCRIPTION

This work consists of resetting the galvanized plate component of a chase drain curb opening.

MATERIAL AND CONSTRUCTION REQUIREMENTS

Work shall meet the requirements of:
- Sections 220 and 500 of the City Standard Specifications
- City Standard Drawing D-21

The existing plate shall be zinc coated if warranted by the condition of the plate, as determined by the Inspector.

METHOD OF MEASUREMENT

Quantity will be measured by square feet of chase drain floor plate reset and accepted as measured at the top of the exposed finished surface.

Removal of existing plate will be quantified as Remove Chase Drain. Measurement will be made for this Bid Item when an existing floor plate is repurposed and reset.

BASIS OF PAYMENT

Payment will be made at the contract unit price and shall include full compensation for all labor, equipment, tools, and materials necessary to complete the work including but not limited to the following:

- Forming
- Zinc coating
- Ancillary steel
- Tack welds

Payment for removal of the chase drain plate will be paid separately.

53. Curb Opening Box (EA)

DESCRIPTION

This work consists of construction of a steel curb opening box and pipe connection.

MATERIAL AND CONSTRUCTION REQUIREMENTS

Work shall meet the requirements of:
- Section 600 of the City Standard Specifications

Neenah R-3262 curb boxes shall be used unless an alternative made of heavy-duty steel is submitted by the Contractor and approved by the City prior to use.

Neenah R-3262-1 are to be used for eight (8) inch curb head. Neenah R-3262-3 are to be used for six (6) inch curb head

METHOD OF MEASUREMENT

Quantity will be measured by the number of curb opening boxes constructed and accepted.

BASIS OF PAYMENT

Payment will be made at the contract unit price and shall include full compensation for all labor, equipment, tools, and materials necessary to complete the work including but not limited to the following:

- Pipes and fittings to tie to existing within ten (10) feet of the curb box
- Excavation
- Removal and off-site disposal of removed materials and debris
- Compaction
- Sawcutting
- Containment of sawcut slurry and dust
- Curb box
- Grout
- Backfill

54. Combination Inlet Frame, Grate, Curb Box (EA)

DESCRIPTION

This work consists of construction of the inlet frame, grate, and curb box components of an inlet. Construction of inlet walls and floor is measured under separate items.

MATERIAL AND CONSTRUCTION REQUIREMENTS

Work shall meet the requirements of:
- Section 600 of the City Standard Specifications

Size of the grate opening shall be approximately eighteen (18) inches deep and thirty-six (36) inches wide.

Deeter #2046 or Neenah R-3246-CC shall be used unless an alternative consisting of heavy-duty steel is submitted by the Contractor and approved by the City prior to use.

METHOD OF MEASUREMENT

Quantity will be measured by the number of combination inlet frame, grate, and curb boxes constructed and accepted.

BASIS OF PAYMENT

Payment will be made at the contract unit price and shall include full compensation for all labor, equipment, tools, and materials necessary to complete the work including but not limited to the following:

- Sawcutting
- Containment of sawcut slurry and dust
- Backfill
- Compacton
- Concrete header
- Removal and off-site disposal of removed materials and debris
- Excavation
- Frame
- Grate

Payment for the construction of the inlet box floor and walls will be paid separately.

55. Concrete Washout Container (DAY)

DESCRIPTION

This work consists of procurement, delivery, maintenance, and removal of a prefabricated concrete washout container and secondary stormwater containment components.

MATERIAL AND CONSTRUCTION REQUIREMENTS

Work shall meet the requirements of:
- City Drainage Criteria Manual (DCM)
- City Stormwater Construction Manual

https://coloradosprings.gov/stormwater-enterprise/page/drainage-criteria-manual?mlid=6291

The concrete washout container shall remain in place until all concrete for the project is placed.

See Schedule C (Special Construction Terms and Conditions), section C.5 for additional requirements.

METHOD OF MEASUREMENT

Quantity to be measured will be the number of 24-hour days (including weekends and holidays) the container is mobilized to the work area. Measurement of quantity will begin with the first day concrete is placed on the project site and end with the last day concrete is placed for project work; per the Inspector's approval and discretion. Total number of washout containers on the site must be approved by the Inspector and should be reasonable for the work.

Payment will not be made for days washout container is mobilized before concrete work starts, or for days when Contractor is completing punch list or rework due to noncompliant work.

BASIS OF PAYMENT

Payment will be made at the contract unit price and shall include full compensation for all labor, equipment, tools, and materials necessary to complete the work including but not limited to the following:

- Installation
- Maintenance throughout the project
- Replacement, if necessary
- Removal upon completion of the work
- Relocation, if necessary
- Secondary containment (plastic, rock socks)
- Signage

56. Storm Drain Inlet Protection (EA)

DESCRIPTION

This work consists of procurement, delivery, maintenance, and removal of reusable storm drain inlet protection devices for the purpose of preventing sediment and pollutants entering the storm system.

MATERIAL AND CONSTRUCTION REQUIREMENTS

Work shall meet the requirements of:
- City Drainage Criteria Manual (DCM)
- City Stormwater Construction Manual

https://coloradosprings.gov/stormwater-enterprise/page/drainage-criteria-manual?mlid=6291

Storm drain inlet protection devices shall consist of reusable woven geotextile fabric containing coarse clean aggregate capable of conforming the shape of the curb opening. Acceptable products for inlet protection include:

- Dandy Curb (Dandy Products)
- EconoCurb (ACF Environmental)
- Curb Inlet Filter (PSI)

Contractor to submit proposed storm drain inlet protection device details to the Project Manager prior to use.

METHOD OF MEASUREMENT

Quantity will be measured by the number of inlets protected and accepted.

BASIS OF PAYMENT

Payment will be made at the contract unit price and shall include full compensation for all labor, equipment, tools, and materials necessary to complete the work including but not limited to the following:

- Reusable inlet protection device
- Surface preparation
- Maintenance throughout the project
- Removal upon completion of the work
- Aggregate

57. Rock Sock (LF)

DESCRIPTION

This work consists of placement, maintenance, and removal of rock socks for the purpose of slowing velocity of runoff in channelized flow areas and as perimeter control of stockpiles.

MATERIAL AND CONSTRUCTION REQUIREMENTS

Work shall meet the requirements of:
- City Drainage Criteria Manual (DCM)
- City Stormwater Construction Manual

https://coloradosprings.gov/stormwater-enterprise/page/drainage-criteria-manual?mlid=6291

Rock socks shall consist of woven geotextile fabric socks containing clean coarse aggregate.

METHOD OF MEASUREMENT

Quantity will be measured linear feet of rock sock installed and accepted.

BASIS OF PAYMENT

Payment will be made at the contract unit price and shall include full compensation for all labor, equipment, tools, and materials necessary to complete the work including but not limited to the following:

- Maintenance throughout the project
- Woven geotextile bag
- Removal upon completion of the work
- Aggregate

58. 2-Inch Electrical Conduit (Schedule 40) (LF)

DESCRIPTION

This work consists of installation of 2-inch schedule 40 electrical conduit. Primarily used in combination with pedestrian push button caisson to run conduit from caisson to existing signal pull box.

MATERIAL AND CONSTRUCTION REQUIREMENTS

Work shall meet the requirements of:

- City Traffic Signal Installation & Parts Specifications

Contractor to receive approval of City Traffic Signal Technician for proper location of conduit installation prior to the work beginning.

METHOD OF MEASUREMENT

Quantity will be measured by linear feet installed and accepted.

Sweeps (elbows) and conduit embedded within caissons will not be measured.

BASIS OF PAYMENT

Payment will be made at the contract unit price and shall include full compensation for all labor, equipment, tools, and materials necessary to complete the work including but not limited to the following:

- Utility locates
- Layout
- Conduit
- Trenching
- Backfill
- Connections

59. Pedestrian Push Button Caisson (EA)

DESCRIPTION

This work consists of construction of constructing a reinforce concrete caisson for a pedestrian push button assembly.

MATERIAL AND CONSTRUCTION REQUIREMENTS

Work shall meet the requirements of:
- City Traffic Signal Installation & Parts Specifications
- Section 600 of the City Standard Specifications

The City will provide the following materials to the Contractor at no cost:
- Pre-tied rebar cage
- Anchor bolt assemby
- Grounding rod

The Contractor shall coordinate with the City for delivery of the City-provided materials or shall arrange to pick them up from the City yard at 416 W Fontanero Street. Contractor to receive approval of City Traffic Signal Technician for proper location of caisson installation prior to the work beginning.

METHOD OF MEASUREMENT

Quantity will be measured by the number of caissons constructed and accepted.

BASIS OF PAYMENT

Payment will be made at the contract unit price and shall include full compensation for all labor, equipment, tools, and materials necessary to complete the work including but not limited to the following:

- Utility locates
- Layout
- Potholing
- Two (2) inch conduit sweep/stubout
- Excavation
- Backfill
- Dewatering
- Setting anchor bolts, rebar cage, ground rod

60. Adjust Manhole Ring and Cover (EA)

DESCRIPTION

This work consists of adjustment of a manhole ring and cover to be located within a monolithic concrete or asphalt section within 6 inches vertically of its existing grade. This item is for minor adjustments that can be accomplished using grade rings and grout only and does not include adjustment of riser sections or boxes.

MATERIAL AND CONSTRUCTION REQUIREMENTS

Work shall meet the requirements of:

- Sections 240 and 630 of the City Standard Specifications

METHOD OF MEASUREMENT

Quantity will be measured by the number of manholes on which the ring and cover assemblies have been adjusted to final grade and accepted.

Adjustments to interim grade during construction for phasing or the convenience of the Contractor will not be measured but shall be included in the work.

BASIS OF PAYMENT

Payment will be made at the contract unit price and shall include full compensation for all labor, equipment, tools, and materials necessary to complete the work including but not limited to the following:

- Additional grade rings
- Removal and off-site disposal of removed materials and debris
- Demolition
- Grout
- Concrete

61. Adjust Water Valve Box (EA)

DESCRIPTION

This work consists of adjustment of a water valve box to be located within a monolithic concrete or asphalt section within six (6) inches vertically of its existing grade. This item is for minor adjustments that can be accomplished using existing materials and does not include procurement of a new valve box.

MATERIAL AND CONSTRUCTION REQUIREMENTS

Work shall meet the requirements of:

- Section 240 of the City Standard Specifications
- Colorado Springs Utilities Water Line Extension and Service Standards

METHOD OF MEASUREMENT

Quantity will be measured by the number of valve box assemblies that have been adjusted to final grade and accepted.

Adjustments to interim grade during construction for phasing or the convenience of the Contractor will not be measured but shall be included in the work.

BASIS OF PAYMENT

Payment will be made at the contract unit price and shall include full compensation for all labor, equipment, tools, and materials necessary to complete the work.

62. Reset Pull Box (Standard) (EA)

DESCRIPTION

This work consists of resetting a standard size pull box to final location and grade. Standard size pull boxes have lids no larger than six (6) square feet in surface area.

MATERIAL AND CONSTRUCTION REQUIREMENTS

Work shall meet the requirements of:

- City Traffic Signal Installation & Parts Specifications
- Section 240 of the City Standard Specifications

The existing pull box shall be reused, or a replacement shall be provided by the City for installation by the Contractor. The Contractor shall coordinate with the City for delivery of a City-provided box or shall arrange to pick it up from the City yard at 416 W Fontanero Street.

Layout and location of pull boxes shall be coordinated with the Inspector before beginning work.

METHOD OF MEASUREMENT

Quantity will be measured by the number of standard size pull boxes that have been reset to final location/grade and accepted.

BASIS OF PAYMENT

Payment will be made at the contract unit price and shall include full compensation for all labor, equipment, tools, and materials necessary to complete the work.

63. Reset Pull Box (Large) (EA)

DESCRIPTION

This work consists of resetting a large size pull box to final location and grade. Large size pull boxes have lids between six (6) and nine (9) square feet in surface area.

MATERIAL AND CONSTRUCTION REQUIREMENTS

Work shall meet the requirements of:

- City Traffic Signal Installation & Parts Specifications
- Section 240 of the City Standard Specifications

The existing pull box shall be reused, or a replacement shall be provided by the City for installation by the Contractor. The Contractor shall coordinate with the City for delivery of a City-provided box or shall arrange to pick it up from the City yard at 416 W Fontanero Street.

Layout and location of pull boxes shall be coordinated with the Inspector before beginning work.

METHOD OF MEASUREMENT

Quantity will be measured by the number of large size pull boxes that have been reset to final location/grade and accepted.

BASIS OF PAYMENT

Payment will be made at the contract unit price and shall include full compensation for all labor, equipment, tools, and materials necessary to complete the work.

64. Reset Ground Sign (EA)

DESCRIPTION

This work consists of resetting a traffic sign to final location and grade.

A ground sign is a sign owned or placed by a public agency for use as a traffic control device.

MATERIAL AND CONSTRUCTION REQUIREMENTS

Work shall meet the requirements of:
- City Signage & Pavement Markings Guidelines
- Section 240 of the City Standard Specifications

Signposts installed within monolithic concrete shall have a 6-inch PVC pipe installed around the base providing separation from the concrete to allow for future maintenance.

METHOD OF MEASUREMENT

Quantity will be measured by the number of traffic sign assemblies that have been reset to final location/grade and accepted. A single traffic sign assembly can have multiple poles and panels.

Sign panels that are fixed to an object other than a signpost, such as a light pole or signal pole, will not be measured but their reset shall be included in the work.

BASIS OF PAYMENT

Payment will be made at the contract unit price and shall include full compensation for all labor, equipment, tools, and materials necessary to complete the work including but not limited to the following:

- Removal and off-site disposal of removed materials and debris
- Reinstallation
- Excavation
- Backfill
- PVC pipe barrier
- Safe storage of materials until acceptance including protection from damage and theft
- New foundation including concrete and reinforcing steel

65. Reset Minor Structure (EA)

DESCRIPTION

This work consists of resetting a minor ancillary structure to final location and grade.

Minor structures include but are not limited to mailboxes, newspaper sidewalk boxes, parking meters, bollards, landscaping boxes, benches, and ground signs that are privately-owned or do not function as traffic control devices. Typically, these items to not require break away bases.

MATERIAL AND CONSTRUCTION REQUIREMENTS

Work shall meet the requirements of:
- Section 240 of the City Standard Specifications

The Contractor shall meet USPS requirements and shall coordinate with USPS if temporary or permanent relocation of a mailbox is necessary. Mailboxes shall be installed in accordance with USPS-STD-7C, available at the following website:

https://about.usps.com/publications/engineering-standards-specifications.htm

METHOD OF MEASUREMENT

Quantity will be measured by the number of minor structures that have been reset to final location/grade and accepted.

Adjustments to minor structures during construction for the convenience of the Contractor will not be measured but shall be included in the work.

BASIS OF PAYMENT

Payment will be made at the contract unit price and shall include full compensation for all labor, equipment, tools, and materials necessary to complete the work including but not limited to the following:

- Removal and off-site disposal of removed materials and debris
- Reinstallation
- Excavation
- Backfill
- Replacement hardware
- Safe storage of materials until acceptance including protection from damage and theft
- New foundation including concrete and reinforcing steel
- Coordination with USPS or owners of the minor structure

66. Portable Message Sign Panel (DAY)

DESCRIPTION

This work consists of installing, operating, maintaining, and removing a portable message sign panel.

A portable message sign panel is also known as a variable message sign (VMS).

MATERIAL AND CONSTRUCTION REQUIREMENTS

Work shall meet the requirements of:
- Section 800 of the City Standard Specifications
- MUTCD Supplement for the City of Colorado Springs

METHOD OF MEASUREMENT

Quantity will be measured by the number of 24-hour calendar days (including weekends and holidays) that a single portable message sign panel is actively used to convey information to public traffic as determined by the Inspector.

Days that a portable message sign panel is on site but not active, not conveying useful information to public traffic, or not functioning properly, will not be measured.

BASIS OF PAYMENT

Payment will be made at the contract unit price and shall include full compensation for all labor, equipment, tools, and materials necessary to complete the work including but not limited to the following:

- Placement and setup
- Operation
- Programming
- Relocation within the project
- Maintenance including replacement
- Removal
- Revisions to messages

67. Flagging (HR)

DESCRIPTION

This work consists of flagging traffic.

MATERIAL AND CONSTRUCTION REQUIREMENTS

Work shall meet the requirements of:
- Section 800 of the City Standard Specifications
- MUTCD Supplement for the City of Colorado Springs

METHOD OF MEASUREMENT

Quantity will be measured by the number of hours that an individual flagger spends directing traffic as determined by the Inspector.

Time that a flagger spends on activities unrelated to flagging, such as setting up or relocating traffic control devices, will not be measured.

Contractor to provide summary of flagging hours to the Inspector for approval daily.

BASIS OF PAYMENT

Payment will be made at the contract unit price and shall include full compensation for all labor, equipment, tools, and materials necessary to complete the work.

68. Landscape Rock (Type A) (SF)

DESCRIPTION

This work consists of placement of Landscape Rock (Type A).

MATERIAL AND CONSTRUCTION REQUIREMENTS

Work shall meet the requirements of:
- Section 02930 of the City Parks Standard Specifications

Aggregate for Landscape Rock (Type A) shall consist of clean crushed stone, crushed gravel, or natural gravel with average particle sizes between one-half inches (½") and two inches (2").

Examples of Landscape Rock (Type A) are:

- Cimarron Granite/Black
- Canyon Granite
- Rio Grande
- Mountain Granite
- Colorado Gray/Granite/White
- River Rock Gray/Tan/Blue/Brown
- River Rock (Washed)

Rock types excluded from Landscape Rock (Type A):

- Any rock type larger than 2"
- Rocky Mountain Red
- Red Canyon
- Black/Denver Granite
- Speckled White River Rock
- Cripple Creek Gold (Gold Ore)
- Arkansas Tan River Rock
- Indian Sunset/Summer/Spice
- Wyoming Gold
- Western Sunset
- Rhyolite
- Lava and Quartz Rock
- New Mexico/Western White
- Purple Mountain
- Colorado Granite
- Breeze/Road base
- Other non-standard (blue, black, rose, gold, purple etc.) color rock

Rock shall be placed atop a uniformly-graded surface with weed barrier fabric.

METHOD OF MEASUREMENT

Quantity will be measured by square feet of landscape rock installed and accepted. Measurements will be constrained to the horizontal plane; additional quantity will not be added for inconsistently sloped (non-flat) finished surfaces with grade breaks or surface texture.

Additional rock due to an uneven, unprepared surface or an overrun of material will not be measured.

BASIS OF PAYMENT

Payment will be made at the contract unit price and shall include full compensation for all labor, equipment, tools, and materials necessary to complete the work including but not limited to the following:

- Excavation
- Surface preparation
- Hauling and delivery
- Return or off-site disposal of unused material
- Weed barrier fabric
- Rock
- Placement
- Spreading

69. Landscape Rock (Type B) (SF)

DESCRIPTION

This work consists of placement of Landscape Rock (Type B).

MATERIAL AND CONSTRUCTION REQUIREMENTS

Work shall meet the requirements of:
- Section 02930 of the City Parks Standard Specifications

Aggregate for Landscape Rock (Type B) shall consist of clean crushed stone, crushed gravel, or natural gravel with average particle sizes between one-half inches (½") and two inches (2").

Examples of Landscape Rock (Type B) are:

- Royal Granite
- Colorado Granite
- Rocky Mountain Red
- Red Canyon
- Western White
- Arkansas Tan River Rock
- Rhyolite
- Red Sunrise
- Golden Sunset
- Indian Sunset/Summer/Spice

Rock types excluded from Landscape Rock (Type B):

- Any rock type larger than 2"
- Black/Denver Granite
- Speckled White River Rock
- Cripple Creek Gold (Gold Ore)
- Lava and Quartz Rock
- Wyoming Gold
- Western Sunset
- Purple Mountain
- New Mexico White
- Breeze/Road base
- Other non-standard (blue, black, rose, gold, purple etc.) color rock

Rock shall be placed atop a uniformly-graded surface with weed barrier fabric.

METHOD OF MEASUREMENT

Quantity will be measured by square feet of landscape rock installed and accepted. Measurements will be constrained to the horizontal plane; additional quantity will not be added for inconsistently sloped (non-flat) finished surfaces with grade breaks or surface texture.

Additional rock due to an uneven, unprepared surface or an overrun of material will not be measured.

BASIS OF PAYMENT

Payment will be made at the contract unit price and shall include full compensation for all labor, equipment, tools, and materials necessary to complete the work including but not limited to the following:

- Excavation
- Surface preparation
- Hauling and delivery
- Return or off-site disposal of unused material
- Weed barrier fabric
- Rock
- Placement
- Spreading

70. Landscape Rock (Type C) (SF)

DESCRIPTION

This work consists of placement of Landscape Rock (Type C).

MATERIAL AND CONSTRUCTION REQUIREMENTS

Work shall meet the requirements of:
- Section 02930 of the City Parks Standard Specifications

Aggregate for Landscape Rock (Type C) shall consist of clean crushed stone, crushed gravel, or natural gravel with average particle size between two inches (2”) and eight inches (8”).

Examples of Landscape Rock (Type C) are:

- Canyon Granite
- Arkansas Tan River Rock
- River Rock Gray/Tan/Blue/Brown
- Horizon
- River Rock (Washed)

Rock types excluded from Landscape Rock (Type C):

- Any rock type 2” or smaller
- Any rock type larger than 8”
- Any type of rip rap
- Boulders
- Rocky Mountain Red
- Red Canyon
- Black Granite
- Cripple Creek Gold (Gold Ore)
- Denver Granite
- Indian Sunset/Summer
- Lava and Quartz Rock
- New Mexico White
- Speckled White River Rock
- Purple Mountain
- Breeze/Road base
- Other non-standard (blue, black, rose, gold, purple etc.) color rock

Rock shall be placed atop a uniformly-graded surface with weed barrier fabric.

METHOD OF MEASUREMENT

Quantity will be measured by square feet of landscape rock installed and accepted. Measurements will be constrained to the horizontal plane; additional quantity will not be added for inconsistently sloped (non-flat) finished surfaces with grade breaks or surface texture.

Additional rock due to an uneven, unprepared surface or an overrun of material will not be measured.

BASIS OF PAYMENT

Payment will be made at the contract unit price and shall include full compensation for all labor, equipment, tools, and materials necessary to complete the work including but not limited to the following:

- Excavation
- Surface preparation
- Hauling and delivery
- Return or off-site disposal of unused material
- Weed barrier fabric
- Rock
- Placement
- Spreading

71. Wood Mulch (Natural) (SF)

DESCRIPTION

This work consists of placement of wood mulch (natural).

MATERIAL AND CONSTRUCTION REQUIREMENTS

Work shall meet the requirements of:
- Section 02920 of the City Parks Standard Specifications

Mulch shall be placed atop a uniformly graded surface with weed barrier fabric.

METHOD OF MEASUREMENT

Quantity will be measured by square feet of wood mulch installed and accepted. Measurements will be constrained to the horizontal plane; additional quantity will not be added for inconsistently sloped (non-flat) finished surfaces with grade breaks or surface texture.

Additional mulch due to an uneven, unprepared surface or an overrun of material will not be measured.

BASIS OF PAYMENT

Payment will be made at the contract unit price and shall include full compensation for all labor, equipment, tools, and materials necessary to complete the work including but not limited to the following:
- Excavation
- Surface preparation
- Hauling and delivery
- Return or off-site disposal of unused material
- Weed barrier fabric
- Rock
- Placement
- Spreading

72. Wood Mulch (Stained) (SF)

DESCRIPTION

This work consists of placement of wood mulch (stained).

MATERIAL AND CONSTRUCTION REQUIREMENTS

Work shall meet the requirements of:
- Section 02920 of the City Parks Standard Specifications

Mulch shall be placed atop a uniformly graded surface with weed barrier fabric.

METHOD OF MEASUREMENT

Quantity will be measured by square feet of wood mulch installed and accepted. Measurements will be constrained to the horizontal plane; additional quantity will not be added for inconsistently sloped (non-flat) finished surfaces with grade breaks or surface texture.

Additional mulch due to an uneven, unprepared surface or an overrun of material will not be measured.

BASIS OF PAYMENT

Payment will be made at the contract unit price and shall include full compensation for all labor, equipment, tools, and materials necessary to complete the work including but not limited to the following:

- Excavation
- Surface preparation
- Hauling and delivery
- Return or off-site disposal of unused material
- Weed barrier fabric
- Rock
- Placement
- Spreading

73. Wood Mulch (Gorilla Hair) (SF)

DESCRIPTION

This work consists of placement of wood mulch (gorilla hair).

MATERIAL AND CONSTRUCTION REQUIREMENTS

Work shall meet the requirements of:
- Section 02920 of the City Parks Standard Specifications

Mulch shall be placed atop a uniformly graded surface with weed barrier fabric.

METHOD OF MEASUREMENT

Quantity will be measured by square feet of wood mulch installed and accepted. Measurements will be constrained to the horizontal plane; additional quantity will not be added for inconsistently sloped (non-flat) finished surfaces with grade breaks or surface texture.

Additional mulch due to an uneven, unprepared surface or an overrun of material will not be measured.

BASIS OF PAYMENT

Payment will be made at the contract unit price and shall include full compensation for all labor, equipment, tools, and materials necessary to complete the work including but not limited to the following:

- Excavation
- Surface preparation
- Hauling and delivery
- Return or off-site disposal of unused material
- Weed barrier fabric
- Rock
- Placement
- Spreading

74. Sod (SF)

DESCRIPTION

This work consists of placement of sod.

MATERIAL AND CONSTRUCTION REQUIREMENTS

Work shall meet the requirements of:

- Section 02920 of the City Parks Standard Specifications

METHOD OF MEASUREMENT

Quantity will be measured by square feet of sod installed and accepted. Measurements will be constrained to the horizontal plane; additional quantity will not be added for inconsistently sloped (non-flat) finished surfaces with grade breaks or surface texture.

BASIS OF PAYMENT

Payment will be made at the contract unit price and shall include full compensation for all labor, equipment, tools, and materials necessary to complete the work including but not limited to the following:

- Surface preparation
- Topsoil

Irrigation water and modifications to an irrigation system will be paid separately.

75. Force Account / Minor Work Revisions (FA)

DESCRIPTION

Force Account / Minor Work Revisions consists of work authorized and approved by the Project Manager which is not identified elsewhere in the contract documents and is necessary to accomplish the scope of work of the contract.

MATERIAL AND CONSTRUCTION REQUIREMENTS

Material and construction requirements will be provided to the Contractor when this item is used.

METHOD OF MEASUREMENT

Force Account / Minor Work Revisions is a Force Account Item.

BASIS OF PAYMENT

Payment will be made for Force Account / Minor Work Revisions at the agreed upon price for the work completed as described within the Minor Work Revisions and shall include full compensation for all labor, equipment, tools, materials and warranty necessary to complete the work.

COLORADO SPRINGS

SCHEDULE F

Scope of Work

TABLE OF CONTENTS

F.1 GENERAL WORK DESCRIPTION F-3
F.2 LOCATION OF SERVICES F-4
F.3 ASSIGNMENT OF WORK F-4
F.4 KEY PERSONNEL F-5
F.5 COORDINATION MEETINGS AND CONTRACT ADMINISTRATION F-5
F.6 CITY REPRESENTITIVES F-5
F.7 COORDINATION REQUIREMENTS F-5
F.8 COORDINATION WITH CITY INSPECTORS F-5

F.1 GENERAL WORK DESCRIPTION

The work to be done by the Contractor shall consist of but is not necessarily limited to:

- Removal and replacement of:
  - sidewalks
  - street crosspans
  - pedestrian curb ramps
  - curb and gutter
  - driveways
  - stormwater inlets
  - patterned concrete cover
  - minor drainage structures
  - pedestrian signal push buttons
  - asphalt patching
- Protection or replacement of:
  - o fencing
  - o retaining walls
  - o landscaping
- Removal of obstructions
- Minor utility relocation and/or adjustment
- Grading, soil scarification, moisture control, backfill and compaction
- Plantings
- Disposal of surplus or waste materials
- Stormwater and erosion control management
- Temporary traffic control

The nature of repairs will be predominantly spot removal and installation of curb, gutters, crosspans, sidewalks, pedestrian curb ramps and curb returns. This work involves matching new work flush to existing improvements upstream and downstream of drainage flow. The intent is to maintain or improve drainage patterns and surface runoff as feasible.

This work shall include restoration of all areas disturbed by construction activities to a condition equal to or better than the pre-construction condition. The Contractor shall obtain all permits and furnish all transportation, materials, tools, equipment, labor and supplies as necessary to complete in a competent manner the improvements as shown and specified in these documents.

This sidewalk, curb, gutter, and crosspan work requires field layout and construction by the Contractor of concrete pedestrian ramps that meet City specifications and standard drawings. Temporary pedestrian and vehicle access shall be maintained to the greatest extent possible.

Note: From time to time, associated work will be required due to the conditions or requirements of the assigned work. This work will be accomplished by adding new unit price items and will be added to the contract by change order.

If a private property owner requests private work they may want done on their property, that work will not be considered part of a City contract. These circumstances will be solely between the Contractor and the property owner.

F.2 LOCATION OF SERVICES

Services will be performed at various streets across the City of Colorado Springs.

F.3 ASSIGNMENT OF WORK

All work will be assigned by individual Task Orders. Task Orders will state the area of assignment and the period of performance.

The City reserves the right to assign work and award Task Orders based on Contractor performance. Furthermore. if in the opinion of the Program Manager and the Contracting Specialist, any Contractor, that has more work than they believe that Contractor can successfully complete (based on the number of crews and equipment available, period of performance time frames, etc.). will be eliminated from further Task Orders until they have completed enough work to again qualify for additional Task Order assignments.

The Program Manager may also eliminate Contractor(s) from the next work assignments until that Contractor can provide sufficient information that clearly indicates that the Contractor(s) has sufficient crews, equipment and time to complete additional work in new street assignments.

Contractors that are consistently behind in assigned work either time or quantity, or regularly performing substandard work may be removed from consideration for any further street assignments until they are back within schedule, have completed the assigned work, and/or have improved quality of workmanship to consistently meet contract specifications.

Contractors that are behind schedule, as determined by the Program Manager and stated production rates, are subject to having portions of their work reassigned to a different Contractor to have the work completed in a timely manner.

Contract period of performance for each Task Order will be determined by production rates stated by Contractor's response to the Request for Proposal. Performance for each Task Order shall run concurrent. NOT consecutively. Contractor shall verify in writing, prior to award. that sufficient crews are available to perform each Task order simultaneously.

F.4 KEY PERSONNEL

The Contractor's staff will be those individuals designated and accepted by the City as key personnel who are identified in Sections 2.6 of this RFP. Any change in personnel added or deleted shall have City approval. The Contractor shall be responsible for informing the Program Manager as soon as there is any proposed change in Key Personnel.

F.5 COORDINATION MEETINGS AND CONTRACT ADMINISTRATION

The Contractor shall appoint a representative who will interface and represent the Contractor in all administrative matters concerning this Contract, including correction of problems, costs, quantity adjustments, weekly meetings, providing weekly work schedules, etc.

F.6 CITY REPRESENTITIVES

The City Program Manager is the only person authorized to modify or make final decisions under this Contract. Any questions concerning price, time or contract terms shall be addressed with the Program Manager. The Contractor is advised that dealing on contract matters with persons other than the Program Manager or appointed representative(s) may be considered a material breach and may be reasons for immediate termination of the Contract without additional notice.

F.7 COORDINATION REQUIREMENTS

The Contractor will be required to coordinate with adjoining property owners, where the proposed work will impact private property, Utility Departments and Telecommunication Companies.

F.8 COORDINATION WITH CITY INSPECTORS

Due to the limited number of City inspection staff available, the Program Manager will only award change orders for work that can be successfully monitored by the number of available inspectors, based on number of work locations currently under construction, complexity of change orders and locations of work. This determination will be solely at the discretion of the Program Manager.