SNO911 RRP

MOBILE RADIO DEPLOYMENT PLAN

Version 01.0

Mobile Deployment Plan

Fall 2021

Revision History

Date	Version	Description	Author
06OCT2021	01.0	Initial Release for Mobile Deployments	Eric Marshall Schoonmaker

• TABLE OF CONTENTS

TABLE OF CONTENTS 2

Overview 6
Purpose 6
Business Context 6
Summary 6
Process Flows 7
Programming Process Flow 7
OPT OUT Deployment Process Flow 7
OPT IN Deployment Process Flow 7
Final Summary Notes 9

Assumptions, Dependencies, Constraints 10
Assumptions 10
Dependencies 10
Member Agencies: 10
MIT Installation Teams: 10
Constraints 12

Operational Readiness 13
Installation Expectations 13
Scheduling 13
Vehicle Preparation 13
Removal of Old Radio Equipment 14
Installation of New Mobile Radio 15
Changes Between Old and New Configurations 15
Minor Changes 15
Major Changes 15
Minimum Standards 15
Documentation Completion 16
Harvesting IDs & Blanking of old radio 16
Notes on Antennas 17
Antenna Location Decision Process for Standard Installations: 17
Motorcycle Antennas 17
Covert Antennas 18
Notes on In-Vehicle Chargers: 19
Notes on Intercoms (David Clark, PVP, FireCom) 20
Vehicle Preparation 21

Member Agencies 21
MIT Installation Team 21
Assessment of Deployment Readiness 22
Record Keeping 23
ID and Serial Number Coupling 23
Equipment Transfer Documentation 23
Scheduling of Installation Appointments 23
Equipment Installation Documentation 23

Transition to Support 25
Installation Defect Support 25
Member Agency Signoff 25
SNO911 Support 25
For OPT IN Member Agencies 25
For OPT OUT Member Agencies 26
For Non-Installation related Quality Issues 26
Quality Assurance 27
MIT Installation Team 27
Quality Assurance Review 27
Quality Addendums 27
Expected Areas of Change 28
Emergency Programming Changes 28
For Radios Not Yet Transferred 28
For Radios Already Transferred 28
Interim Programming Change Process 29
Template Review 29
Supporting Documents 29
Radio Management Groups 30

Release Planning 31
Release of the Product 31
Contingency Planning 32
Template Variations 32
Antenna Variations 33
Coaxial Variations 33
Extended Length Coaxial 33
Thick Roof Mount 33
Ground-Plane Free 33
Unprepared Vehicles 34
Configuration Changes 34
Faceplate Variations 34
Radio is DOA 35

In Programming Phase 35
In Installation Phase 35
Missing Hardware 35
R56 deviations in Old Installations 35
RF Leaks 35
Unique Vehicles 36
Hovercraft and boats 36
Illegal / Hazardous Substances 36
End of Life Planning for Removed Equipment 37
Hardware Turnover 37
Blanking of Old Radios 37
Radios Which Cannot be Blanked 37
Disposition of Blanked Radios 37

Attachments 38

Glossary 39

Approval Signatures 40

VERSION 1.2 SUBSCRIBER INSTALLATION GUIDELINE - Excerpts 42
Lynnwood PD: (2018 Ford Utility Interceptor) Patrol Unit ID: 368 44
Lynnwood PD: Harley Davidson Motorcycle 46
(Road King Classic) Patrol Unit ID: 270 45
South County Fire: (H&W Warrior Emergency Vehicle) 48
South County Fire: (Ford E Series Ambulance) 50
Everett PD: Mobile Command Center 52
Everett PD: (Ford Interceptor) 54
Everett PD: (Ford Crown Victoria Sedan) 56
Everett PD: (Ford F150 w. Shell) 57
Everett Fire: HazMat/Special Ops 59
Everett Fire: (International) 61
Everett Fire: (Battalion One, Chevy Tahoe) 63
Everett Fire: (Ford E-450) 65
Everett Fire: (Rosenbauer) 68
Everett Fire: (American LaFrance) 69
Sheriff: (Ford Transit 350) 71
Sheriff: (20’ Aluminum River Boat) 73
Sheriff: (Chevy Caprice Sedan) 75
Sheriff: (Ford Explorer Interceptor Utility) 77
Marysville PD: (Chevy Interceptor Sedan) 79
Marysville PD: (Ford F150 Truck w. Camper) 81
Marysville PD: (Lenco BEARCAT w. armor plate) 83

Marysville PD: (Ford Crown Victoria Sedan) 85
Marysville PD: (2017 Ford Explorer) 87
Marysville Fire: (Chevy Suburban) 89
Marysville Fire: (International) 91
Marysville Fire: (2019 Ford E450) 93
Marysville Fire: (Rosenbauer Commander) 95
Miscellaneous Technical Notes 1 97
Miscellaneous Technical Notes 2 98
Miscellaneous Technical Notes 3 99
Miscellaneous Technical Notes 4 101
Miscellaneous Technical Notes 5 102
Miscellaneous Technical Notes 6 103
Miscellaneous Technical Notes 7 104
Miscellaneous Technical Notes 8 105
Miscellaneous Technical Notes 9 106
Miscellaneous Technical Notes 10 107

1. Overview

1.1. Purpose

The purpose of this plan is to define the scope of work and process SNO911, MSI, MIT Installation Team, Day Wireless and Member Agencies will utilize to deploy APX Mobile radios to the user agencies to include individual agency responsibilities and expectations.

This plan is not an entirely new proposal, as much of what populates the included articles is built from the RRP Portable Deployment Process, in which effective and logical workflows were crowdsourced from the parties involved in developing plans for Portable Radio Programming and Delivery to Member Agencies. For those involved in that effort much of what follows will be familiar. Employees who had a station in that endeavor will feel a return to those same stations in this stage of work.

1.2. Business Context

Resulting from this deployment, SNO911 and its Member Agencies will utilize APX Mobile (in-vehicle) radio for communication with SNO911 Communications Center and each other. This platform is replacing aging Mobile Radios currently in use on SNO911 Trunked System 7F32. A major component of the Radio Replacement Program is the decommissioning of 7F32 (Analog) which will be replaced with System 03AA (Digital).

1.3. Summary

Within the Radio Replacement Plan, Mobile Radios are defined as Motorola APX mobile radios whether deployed in a vehicle, **as a desk base** or on a portable device such as a breadboard or other type setup. The term *Mobile Radio Installation* includes the Mobile Radio, any accompanying peripherals such as antennas, speakers, mounting hardware and power cabling etc. Further, some installations will include in-vehicle charging systems for APX8000 series Portable Radios, and/or intercom interfacing. Others will require stealth components for covert applications.

■ Process Flows

3 process flows have been identified for Mobile Subscriber Deployment. *Programming*, *OPT OUT Deployment* and *OPT IN Deployment*.

Programming Process Flow

● The *Programming process flow* kicks off initial unboxing of the Mobile Radio Transceiver Pack and Control Head from factory shipping.
○ The radio boxes will be inventoried by a representative of SNO911 with their contents verified.
● Collaboratively between Motorola and Day Wireless the radio Serial Numbers become married to an exclusive SNO911 radio system ID.
● Radios are programmed with the records for this introduced to Provisioning Manager and Radio Management (databases internal to SNO911) by Motorola.
● Each mobile radio transceiver pack and control head will be run through Aeroflex 3920 Autotest with the results compiled by Motorola.
● The radios are then placed into the original factory box, inventoried by a SNO911 representative and resealed.
● The radios are forwarded to SNO911 Business Unit for dispersal to the Member Agencies
○ Deliveries should be in quantities negotiated between Member Agencies and SNO911 Business Unit as near as possible to one week prior to the installation appointments.

OPT OUT Deployment Process Flow

For *OPT OUT Deployments*, transfer will be initiated by the SNO911 Business Unit. Radios will transfer to the Member Agency who will hold the radios in their possession and organize with an Installation Agency of their choosing under their coordination. Minimum Guidelines from SNO911 can be made available for informational purposes.

OPT IN Deployment Process Flow

For *OPT IN Deployments*, transfer will be initiated by the SNO911 Business Unit Manager. Some radios may have accompanying hardware with the shipment of radios. For those cases,

1. Accompanying hardware is gathered in the Staging Area once SNO911 Business Unit has coordinated a delivery with the Member Agency with an aim on delivery 1 week prior to the installation appointment.
2. The accompanying hardware will go with the Mobile Radio shipment, but not in-box with the radios.
a. Some discussion was had on whether to pack the accompanying hardware into the mobile radio boxes. This was decided against as larger items such as in-vehicle chargers would not fit.
b. More flexibility exists with the covert packages set aside, as the Member Agencies would not have to devote time searching out specific radios denoted as covert, but instead can simply provide a radio and the accompanying hardware as a set to MIT.
3. Radios and any accompanying hardware will transfer to the Member Agency who will hold the radios in their possession.
4. Member Agencies must provide the Mobile Radio and any peripherals to MIT at the Installation Appointment.
5. MIT Installation Team will coordinate an installation schedule with the Member Agency while keeping SNO911, Motorola and the Member Agency informed of the installation schedule.
a. This approach increases communications effectiveness by putting Member Agencies directly in touch with their installers. Without a middleman, the potential for poor communications is considerably reduced.

6. MIT Installation Teams are expected to be working simultaneously at different Member Agency locations.

a. The installations will follow a minimum standard as defined in this and supporting documents outlined in the Attachments section.

7. MIT Installation Teams will remove Old Radios and their associated components from vehicles.

a. Old Radios are defined as equipment in use pre-Radio Replacement Plan, which are also slated for removal as part of the Radio Replacement Plan to be replaced with new Motorola APX Mobile Radios.

8. Radios will be tested by MIT Installation Teams for proper operation before being turned over to the Member Agency who will have a representative identified to sign-off on the completed work.

Regardless of OPT IN or OPT OUT status

- After installations are complete, *it is the responsibility of the Member Agencies* to provide the removed old radios to SNO911for ID harvesting and blanking.
  - Radios should be delivered to the Snohomish County 911 Marysville Facility
  - 14900 40th Ave NE #102 Marysville, WA, 98271
- Harvesting and blanking will be carried out collaboratively between SNO911 Subscriber Group and SNO911 Business Unit.
- After this process is complete, the Member Agencies will be notified by SNO911 Business Unit their old radios are ready for pickup.

Why do we need to harvest and blank radios?

- Each radio has a unique number which identifies it to the system.
  - This allows dispatch to know who they are speaking to during calls. These numbers are called Radio IDs.
- There is a limited number of Radio IDs available.
  - To accommodate the RRP SNO911 has double the normal load of Radio IDs in circulation. This is because replacement radios have been programmed and each use a Radio ID.
  - As a result, SNO911's reserve of available Radio IDs is critically low.
- Harvesting the Radio IDs from old radios frees up IDs so SNO911 can respond to requests like adding agencies to our system or loaning out cache radios.
- Blanking the radios erases ours and our partnering Public Safety Communications Systems from the radio.
  - This ensures unauthorized use is impossible
  - Old radios can then be surplussed or disposed of as each member Agency chooses with no worries about system security.

Final Summary Notes

Most installations will have some form of minimum guidance with the notable exception of specialty vehicles and boats, which are considered unique. **MIT Installation Teams will work with direct guidance from the Member Agencies for these installations specifically.**
For all other installations component placement/orientation is expected to remain similar to the Old Radio which was removed to the point that quality remains at the forefront. **One notable exception to this statement is where new radios will utilize dual-heads when the old radio did not, or vice versa.**

After installation but before release to the customer, MIT Installation Team will perform tests to verify proper operation of the radio system. Upon completion and documentation of the tests, MIT Installation Team will ensure copies of SNO911 provided supporting documentation are placed accessible to the radio user in each installation area. Upon release of the Radio System installation, MIT Installation Teams will collect a signature from the Member Agency representative.

The SNO911 Subscriber Group members will be available for advice for OPT IN installations should guidance be necessary. As not all installations are the same, but the goal is uniformity across the fleet, SNO911 Subscriber Group can help mediate any inconsistencies encountered in the field.

2. Assumptions, Dependencies, Constraints

2.1. Assumptions

Currently SNO911 Member Agencies use some sort of Motorola mobile radio. It is assumed that the users are familiar with basic radio use including push-to-talk, navigating their radio, etc.

Member Agencies choosing OPT OUT installations are responsible for ensuring their radios meet installation minimum standards. Installations performed for OPT OUT users carry no warranty from SNO911, MIT or Motorola for issues pertaining to installations. Follow-up troubleshooting, if necessary, must be arranged between the OPT OUT Member Agency and their chosen Installation Agency. In the event defects are encountered, SNO911 will provide a copy of the *RRP Mobile Radio Installation Quality Defect Questionnaire* which the Member Agency must ensure is filled completely prior to requesting SNO911 staff response.

- Install work etiquette:
  - MIT Installation Team must come equipped to be able to use only their own tools to get the entire job done right, unless prior arrangements with a customer location venue are made on a case by case basis for a specialized requirement.
  - Customer shop internal work and schedules must not be imposed upon by installer issues. Come prepared with the right information to do a thorough quality job.

2.2. Dependencies

■ Member Agencies:

SNO911 expects Member Agencies to make their vehicles ready for installation prior to the installation start time. This includes removal of all items/gear that may impede an installer's ability to efficiently access cable runs, etc.

- All installations will encompass removal of all old radio equipment and wiring.
- *Absolutely no* reuse of cabling of any kind from the old radio. This includes all power, RF and speaker wiring.
- Old Radio trunnions or standard mounting hardware are required to be removed in all cases.
- Simply put, *no remnants of the old radio should remain in any case for both OPT IN and OPT OUT Installations*.
  - The only exceptions to this are *non-functional elements*, such as
    - loom
    - custom mounting hardware
    - Switched power sources (The switch being the allowable exception, not the wiring.)
    - Relays
    - Fuse blocks (Aftermarket vehicle fuse blocks, not particular to the radio being the allowable exception)
    - Fuse-taps and wire-taps are expressly forbidden for new radio installations in the RRP.
- If a fuse must be tapped, “add-a-fuse” type connections are the only supported model.
- Optimally, a screw type terminal connection will be utilized if direct connection to battery or ignition is not chosen.

■ MIT Installation Teams:

MIT Installation Teams must perform accurate data entry and forward the records to SNO911 and Motorola. SNO911 Documentation requirements necessitate that Installation Team members are equipped with:

- Barcode Scanner for accurate data entry of
  - The radio serial number
  - The radio ID sticker
- An Email Client
  - For document sharing
- Internet connectivity sufficient enough to share project documentation.

Radio Testing is a requirement for all Mobile Radio Installations. MIT Installation Teams will need:

- A portable radio available for 2-way testing with the newly installed Mobile Radios.
- A Wattmeter for VSWR testing.
- A Multimeter or Voltmeter for
  - Voltage measurements
  - Voltage drop testing
  - Ground verification.
    - Each ground must connect directly to the vehicle chassis.
    - Bare metal contact is an imperative. Paint must be stripped to bare metal at each ground connection.
    - Ground studs are not approved for the Radio Replacement Project.
- For VSWR Measurements and voice testing of the radios:
  - Tests will be performed on the talkgroup "**ANALOG-TEST**".
    - This talkgroup is hidden uniformly in the 800 INTEROP zone at Channel position 14 in all RRP radios.

2.3. Constraints

- Customer Vehicle availability is a foremost constraint. Addressing this, communications between Member Agencies and MIT Installation Team should be direct with no obstacles.

- MIT Installation Team is expected to keep installation locations as busy as they can support with *quality work safely performed* paramount to all other logistical concerns.

- Personnel availability (MIT Installation Teams or Member Agencies) may affect productivity in the event of unscheduled absences. Customers and MIT Installation Teams are expected to communicate with each other to minimize work stoppages.

- Though uniformity of installation across like-vehicles and platforms is the general rule of thumb, each installation may vary.
- Unforeseen complications from these variations may slow production.
- MIT Installation Team is expected to keep Member Agencies, SNO911 and Motorola aware of any impact on the installation schedule and provide adequate notice and opportunity for rescheduling if necessary.
- SNO911 Project Management can be called upon to organize communications in the event Member Agencies or MIT Installation Teams require mediation on the placement of components.

- Parts availability problems could significantly delay production.
- Sno911 will supply MIT Installation Teams with non-standard parts to accommodate installations where the typical antenna and/or coaxial packages are not sufficient.
- These items include:
  - 25’ Coaxial Cables
  - Thick-roof mount coaxial cables
  - Ground plane free antennas
  - Interface cables for
    - David Clark Systems
    - FireCom systems
    - PVP Systems (Motorcycles)
- These parts are considered consumables, however in the event shortages are foreseen, *MIT Installation Team must inform SNO911 and Motorola early so replenishments can be arranged with time to spare.*

3. Operational Readiness

3.1. Installation Expectations

The typical installation comprises several status points:

1. Scheduling

○ Mutual responsibility of Member Agency and MIT Installation Team

2. Vehicle Preparation

○ Member Agency must provide a vehicle with no firearms or loose gear which could impede installation.

■ Firearms are not to be left in the installation workspace while the MIT Installation Team is working under any circumstances.

○ MIT Installation Team will

■ Document any observable vehicle defects while accepting vehicles for installation work.

■ Go over details with Member Agency representative of installation plan to include expected location of:

1. holes to be drilled
2. antennas to be mounted
3. switched power sources
4. ergonomic considerations (if applicable)

a. If deviating by request from Old Radio configuration *written notice* from the Member Agency must have been received by MIT Installation Team no later than 5 business days prior to installation appointment

b. If prior written notice was not submitted in time the deviation, if not the installation appointment itself will be subject to cancellation and rescheduling.

3. Removal of Old Radio Equipment

○ Removal of the old radio and all associated components includes:

■ Radio Transceiver

■ Control Heads

■ Mic Mounts

■ Antennas

1. No existing antennas or RF line kits are to be reused

a. The only exception to this is certain specialty vehicles that come from their manufacturer with RF coax cables pre-run, and are not replaceable in the field; such line kits may be reused.

b. If an associated NMO mount is in poor condition, replace it.

i. All removed antennas and line kits may be discarded or recycled as decided by each Venue location or applicable agency.

c. For proper RF functionality, an NMO mount must make excellent bare metal contact with its roof or mounting plate.

i. As these mounts are replaced or new mounting holes added to a vehicle, make absolutely sure that the paint and/or silicone sealers surrounding the hole lip are scraped off by a hole saw or manually.

d. If the existing antenna mount has been coated with silicone sealer, that is a clear indication that the existing hole leaks. Customer has requested that such holes not be re-used and that a rubber hole plug be put in place.

■ Speakers

■ Wires and cables

1. If compatible intercom cabling was used with the old radio, it **may** be reused.

a. In the process of removing existing radio accessory cables from vehicles, installers may cut these cables to make removal faster or more efficient.

b. Some Member Agencies may require radios, accessories, and cables removed intact together, so that they may be available to the particular agency for reuse.

i. MIT Installation Team should inquire during the Pre-installation discussions whether accessory cables can or cannot be cut during removal.

c. If in doubt, remove radio accessory cables intact.

■ Trunnions

4. Installation of New Mobile Radio

○ Installation of the new radio in accordance with R56 standards and discussion with the Member Agency as outlined in step 2.

○ After removal of the Old Radio, APX series Mobile Radios must be installed in a similar fashion.

■ Location of corresponding components should match more or less.

■ Minor variations per user request to address operational or ergonomic issues are expected, but major changes to layout are not expected nor supported for this project.

■ User requests for change must be received in writing 5 business days prior to the installation. *Verbal instructions will not be taken at the time of the installation.*

■ Changes Between Old and New Configurations

Minor Changes

Minor Changes are such that equipment is installed in a similar location with minimal change.

■ Some if not all original mounting holes are reused and cable runs are unaffected.

■ These changes can be coordinated on the day of the installation provided they do not require exploratory work to be performed to complete the request.

Major Changes

Major Changes are such that exploratory work is required to meet the request.

■ New mounting/cable passage holes must be drilled, cable runs must pass through new pathways to connect to the radio components etc.

■ These changes will require a minimum of 5 business days written notice so that MIT Installation Teams can coordinate and plan for contingencies.

■ Minimum Standards

● All Radio Replacement Project Mobile Deployments are to adhere to **R56 Standards**.

● MIT Installation Team will be provided with copies of the **APX8500 Minimum Installation Standard** by SNO911/Motorola Project Team highlighting the anticipated areas of Quality Concern.

○ OPT OUT Agencies should have the same Installation quality minimum standards as OPT IN Agencies.

■ SNO911 cannot enforce these standards during Installation as OPT OUT occurs outside SNO911's visibility.

■ For OPT OUT, it is the responsibility of Member Agencies to enforce Motorola R56 Minimum Standards are met.

■ The **APX8500 Minimum Installation Standard** should help eliminate quality concerns before they exist.

○ Testing

■ MIT Installation Team will verify proper operation of the new APX radio prior to releasing the vehicle.

5. Documentation Completion

○ MIT Installation Team will prepare all paperwork for the installation.

○ MIT Installation Team will place a copy of the correct *Visor Guide* and *Ergonomic Sheet* in the passenger compartment.

○ Sign-off and release

■ Member Agency representative will sign off on the job via MIT Installation Team paperwork, thus formally accepting the work so the vehicle can be released.

6. Harvesting IDs & Blanking of old radio

○ Member Agency will deliver old radio and any associated hardware to SNO911 either directly in Marysville or at a designated drop-off site for blanking.

○ SNO911 will

■ Temporarily accept radio into their possession

■ Harvest the ID from the radio

■ Blank the old radio.

1. Mark the radio with a sticker stating "I've been blanked!"

a. If unable to blank entirely, removal of all SNO911 Systems and replacement with a dummy system will be necessary.

b. In this case, the radio must be marked with a sticker stating "No resale value".

■ Inform Member Agency when radios are ready for pickup

1. Under no circumstances will SNO911 dispose of blanked old radio for Member Agencies.

○ Member Agency collects their blanked old radios

■ SNO911 releases blanked old radio and any associated hardware to Member Agency

■ Member Agency departs with blanked old radio and is free to dispose of as they please.

■ Notes on Antennas

As RRP APX radios utilize two antennas and Old Radios did not, typical installations incur at least 1 new antenna hole. In most cases, the GPS/WiFi Antenna will require a new antenna hole be drilled in the vehicle. Radio users should be aware this vehicle modification is expected and necessary. In no cases, OPT IN or OPT OUT, will the GPS/WiFi Antenna not be installed.

In typical installations the new 800 Antenna will utilize the same Antenna hole as the Old Radio provided the location was on the roof of the vehicle. In the event the Old Radio antenna was NOT on the roof, MIT Installation Team is expected to cap the hole and mutually with the Member Agency choose an optimal location on the roof.

Antenna Location Decision Process for Standard Installations:

● If Old 800 Antenna was on the roof and the hole is
○ *undamaged* MIT will
■ reuse the existing hole.
● *Undamaged* is defined as
○ free from rust which would inhibit radio performance
○ deformities which could compromise a seal
○ silicone sealant, which is considered a sign of previous leakage during the installation phase of deployment.

○ *damaged* MIT may decide between
■ attempting to fix the hole for reuse or
■ capping it and creating a new hole nearby

● If Old Antenna was *not* on the roof
○ MIT Installation Team will plug the hole and drill a new hole as close to center on the roof as possible.

● If the Old Antenna was *not* on the roof *and* the center of the roof is *not available*
○ MIT Installation Team will drill a new hole as close to the center as possible while away from other antennas/equipment.

Motorcycle Antennas

● must be smaller and potentially able to operate with no ground plane. Sno911 has ordered a selection of Motorcycle antennas and will provide them to the Member Agencies with their Motorcycle Radios.
○ These antennas will replace the existing 800 antennas on Motorcycles in the fleet.
○ Antenna placement should match the old installation as long as R56 guidelines have been followed.

Covert Antennas

Notably different than standard antennas as their locations **can** be coordinated between MIT Installation Team and the Member Agency at the time of the appointment.

- All vehicles will be assumed to receive standard installations unless specifically coordinated otherwise by the Member Agency.
  - Vehicles requiring Covert Antennas must be declared by the Member Agencies during appointment scheduling**.**
  - In no case will MIT Installation Team be responsible for initiating covert installations.
- Member Agencies are to provide their covert antenna package to MIT Installation Team at the beginning of their installation appointment.

SNO911 has created a preferred GPS/WiFi Antenna Placement document. MIT Installation Teams are authorized to identify the optimal location for the GPS/WiFi Antenna based on these predefined priority locations.

Each Member Agency will have to assign a single point of contact for MIT Installation Team to turn to for decision-making. For every appointment, the *decision-maker is responsible* for communicating Agency expectations to MIT Installation Teams. *There will be no rework due to misdirection from Member Agency decision-making.*

■ Notes on In-Vehicle Chargers:

● Vehicles requiring In-Vehicle Chargers to be installed by MIT Installation Teams must be declared by the Member Agencies during appointment scheduling. **The users are to provide their In-Vehicle Chargers** to MIT Installation Team at the beginning of their installation appointment.

● It is anticipated vehicles will have previous generations of In-Vehicle Charger to be removed and replaced by the MIT Installation Team.

● With similarity from old-to-new configurations being a primary objective, the expectation is that the previous generations of In-vehicle chargers will be replaced on a one-for-one basis and in similar location and manner in the vehicle.

○ MIT Installation Team is expected to take note of the power configuration prior to removal of the Old In-Vehicle Chargers to ensure similar operation from the new units.

○ All supporting hardware for In-Vehicle Chargers must be replaced during the installation. This includes but is not limited to:

■ Power wiring

■ Trunnions

■ In no case will any remnants of the original In-Vehicle Charger be reused in the new installation beyond non-functional parts like loom, custom mounting plates or vehicle specific hardware.

■ This requirement exists for both OPT IN and OPT OUT Installations.

● While SNO911 cannot enforce this standard for OPT OUT installations, it is the responsibility of the Member Agency to ensure R56 quality standards on their installations

■ Notes on Intercoms (David Clark, PVP, FireCom)

● Some vehicles may have intercoms as part of the deployed hardware package. SNO911 has provided for this by ordering interface cables for these systems.

○ MIT can take these parts and use them as consumables

■ Quantities must be monitored and low levels must be reported to SNO911 with plenty of time to place orders for replenishments.

○ The scope of labor for intercoms is for MIT Installation Teams to connect the Radio to the intercom system using the provided wiring. MIT Installation Team is not to remove and replace intercom systems as part of the Radio Replacement Project.

○ Depending on the configuration, some pins in the 6 conductor MOLEX square connector may require a swap.

■ Motorola can provide further detail on this should the need arise.

● Existing PA "Rebroadcast" and/or Intercom functionality

○ Numerous existing mobile installations include a simple radio speaker connection for "rebroadcast" of radio audio via a PA audio input port to a Whelan (Wecan controller/Syncom Sapphire) or Federal Signal (Touchmaster) siren unit, etc.

○ Numerous existing mobile installations include an interface between the existing radio and a vehicle intercom system (David Clark or Firecom 5000R), etc.).

○ Per early discussion with the Member Agencies

■ if the above functions are already operational with an existing radio, the new radio should have the same functionality.

■ If this function was not operational with the existing radio, the new install will likewise not include this functionality.

3.2. Vehicle Preparation

■ Member Agencies

Prior to installation start time Member Agencies are expected to:

- Have their vehicle cleared to allow for access to cable routes with no emptying of the vehicle required by either SNO911 or MIT Installation Team personnel.
  - It is the responsibility of the Member Agency representative to unload gear from the vehicle as well as reload the vehicle after the installation appointment is completed.
  - MIT Installation Team personnel are under no obligation to move gear or items in the vehicle beyond their ability to perform work.
- Member Agencies be advised that under no circumstances are firearms to be left in the installation area while the installation is occurring.
  - *Installation will be refused and rescheduled if the vehicle or installation area is not ready prior to installation start time.*

■ MIT Installation Team

At the beginning of the installation appointment the MIT Installation Team will:

- Inspect the vehicle in the presence of the Member Agency Representative for any observable damage of defects.
- Go over installation specifications, including the expected location of radio components and cable runs, antennas, etc with the Member Agency Representative.

3.3. Assessment of Deployment Readiness

All RRP Mobile Radios issued to users following *the guidelines set forth in this document* must:

- Have only been programmed through RM* with an exclusive matching Radio ID from PM.
  - *caveats exist for radios already in the field due to pilot testing or early issues which were released to Member Agencies prior to the rollout of Radio Management.
- Have passed 3920 autotesting.
- Have been transferred to a Member Agency.
  - Documented with appropriate Asset Transfer paperwork.
- Have accompanying hardware provided for the installation appointment by the Member Agency.

3.4. Record Keeping

At a minimum, the following records must be kept for operational purposes as well as for reference during audits or system polling.

■ ID and Serial Number Coupling

● IDs are coupled to Radios during the programming phase by Motorola or Day Wireless.
○ IDs and Serial numbers are to be scanned, not typed, eliminating the potential for human error in the form of typos.
● On an every other week recurring basis during programming phases, RM and PM must be balanced by SNO911 Subscriber Group
○ Emphasizing ID budgeting and alignment
○ Discrepancies must be chased down, as duplicate IDs cannot be allowed to get into the hands of SNO911's user base.
○ This is accomplished using the *ID Sifter*.

■ Equipment Transfer Documentation

● Prior to relinquishing possession of any radios, SNO911 Business Unit must generate Asset Transfer documentation which clearly states that the ownership of all assets being transferred is released to the Member Agency receiving them.
○ This documentation must include the any asset ID numbers, including but not limited to the Radio ID, the Radio Serial Number and the Asset Tag ID.
○ Member Agencies must sign a copy of this transfer paperwork and return it to SNO911 Business Unit at the time of transfer.
● **For Member Agencies choosing to OPT OUT of SNO911/Motorola provided installations, this is the last official contact SNO911 will have in the deployment of their radios.**
○ SNO911 cannot enforce further forwarding of documentation past this point for OPT-OUT Member Agencies.

■ Scheduling of Installation Appointments

● MIT Installation Teams will be provided information for each agency to include
○ Their locations
○ Quantities of equipment to be delivered to each location
○ Member Agency location contacts
● MIT will coordinate their own installation appointments with the Member Agencies
○ The output of these appointments must be shared with Motorola, the SNO911 Business unit and SNO911 Project Manager.
■ With this information, the SNO911 Business Unit will coordinate their delivery schedule, ensuring sufficient radios and accompanying hardware are onsite for the installations to occur.
● This is expected to be the week prior to the installation appointment.
○ Any rescheduling must also be conveyed to allow for SNO911 and Motorola to adjust appropriately.

■ Equipment Installation Documentation

At each installation, MIT Installation Teams will document:

- Basic vehicle information to include:
  - Any observable defects or damage to the vehicle upon receipt.
  - Installation type to occur
    - Vehicle Type
- Old Radio information to include:
  - Identifying numbers for the radio removed
  - Any accompanying hardware removed
- Basic Radio System information to include:
  - Radio Configuration
  - O2, O3, Dual Head, Remote mount, Dash Mount, Covert, etc.
  - Any accompanying hardware
  - Antenna locations
  - Component locations
- Radio Test results including but not limited to:
  - Voice test results
  - Wattmeter test results
  - Voltage drop measurements
  - Voltage and ground testing
- Customer sign-off on completed work.

4. Transition to Support

4.1. Installation Defect Support

■ Member Agency Signoff

Once the radio has been installed, the Member Agency representative should inspect the installation and bring to the attention of the installer any immediate concerns observed.

● Member Agencies are advised to consider this their last opportunity to address any concerns they have with the installation.
○ MIT Installation Teams typically are not expected to circle back on installations after Member Agency sign-off.
○ If, after the installation appointment, a defect is discovered in the installation work, Member Agency can forward their findings to Motorola and SNO911 Project Management who will collectively coordinate the project team response.

■ SNO911 Support

Throughout the Installation phase of the Radio Replacement Project for Member Agencies SNO911 support is available.

For OPT IN Member Agencies

● Once contact with SNO911 PM has been made, users should expect:
○ Return contact from SNO911 Subscriber Group confirming the details of the reported issue.
○ An appointment (if necessary) allowing SNO911 Subscriber Group the opportunity to observe the issue as reported.
■ SNO911 Subscriber Group may adjourn after gathering information to research fixes.
■ This may require meetings with Member Agencies to authorize template changes if necessary.
○ Once SNO911 Subscriber Group has gathered sufficient information for a response they will:
■ Respond directly with a technical solution for the affected unit(s).
● This may include Subscriber programming updates to be applied across the fleet.
■ Involve the SNO911 Business Unit to coordinate depot service for the affected units(s).
● Asset Tracking is an operational imperative when moving units around.
●
■ Turn the issue over to Motorola for support
■ Provide feedback to the Reporting/Affected agencies.

For OPT OUT Member Agencies

- SNO911 Subscriber Group support is available for installation quality issues only after thorough completion of the 'RRP OPT OUT Installation Quality Defect Questionnaire'.
- In no case will SNO911 Subscriber Group be called to action on an installation defect without this document filled in its entirety.
  - Typically this document :
    - Is forwarded to the OPT OUT Member Agency's installation agency by SNO911 PM or Subscriber Group
    - Is filled out by the installation agency that performed the installation services for the OPT OUT Member Agency.
    - Serves as guidance likely to lead qualified personnel to the issues to be remedied.

For Non-Installation related Quality Issues

- SNO911 Project Manager is the primary point of contact. Once contact with SNO911 PM has been made, users should expect:
    - Return contact from SNO911 Subscriber Group confirming the details of the reported issue.
    - An appointment (if necessary) allowing SNO911 Subscriber Group the opportunity to observe the issue as reported.
- This may require meetings with Member Agencies to authorize template changes if necessary.
- SNO911 Subscriber Group may adjourn after gathering information to research fixes.
    - Once SNO911 Subscriber Group has gathered sufficient information for a response they will:
- Respond directly with a technical solution for the affected unit(s).
  - This may include Subscriber programming updates to be applied across the fleet.
- Involve the SNO911 Business Unit to coordinate depot service for the affected units(s).
  - Asset Tracking is an operational imperative when moving units around.
- Turn the issue over to Motorola for support
- Provide feedback on the fix to the Reporting/Affected agencies.

4.2. Quality Assurance

A constant Quality Assurance presence by SNO911 or Motorola will not be possible at all times.

■ MIT Installation Team

● Will kickoff the “Pilot Test” or qualification runm formally beginning the Mobile Installation Phase of the Radio Replacement Project. .

○ The purpose of this is to demonstrate their understanding of the minimum standards required for Radio Replacement Plan installations.

○ Upon completion of the “Pilot Test” or qualification run, MIT Installation Teams will have demonstrated their ability to operate, and will be set free to the Installation Phase of the project.

○ It should be clearly understood that Quality Assurance is the job of all Installation Team members.

■ Quality Assurance Review

● All installations performed during the Installation Phase are subject to Quality Assurance review by SNO911 Staff ensuring compliance with the R56 Mobile Installation Standards and Techniques Manual.

○ These may or may not be done at the time of installations.

○ SNO911 reserves the right for itself and Motorola to perform random quality assurance checks on any installation at any time in the installation phase of the project.

■ Quality Addendums

● If Quality Deficiencies arise, changes may be necessary.

○ Should this occur, SNO911 will provide MIT Installation Teams with updated guidance in the form of a Quality Addendum to mitigate the likelihood of widespread deficiencies

4.3. Expected Areas of Change

■ Emergency Programming Changes

A notable occurrence during the Portable deployment phase of the RRP was the customer demand for immediate fleetwide radio reprogramming of radios (which may or may not include firmware updates simultaneously) both before and after deployment. These scenarios were typically in response to what was deemed a safety issue by the Member Agencies in the originally offered programming, yet had not been recognized by the time deployment commenced. Should this happen:

For Radios Not Yet Transferred

- For Radios not yet transferred to Member Agencies, radios will be pulled from the Transfer Ready Staging Area and MSI, DWS and SNO911 will run through Programming Procedure as described in the Programming Process Flow.
- After these steps, the transfer process may be completed per the OPT OUT or OPT IN Process Flow.

For Radios Already Transferred

- If the Radio *has transferred* to the Member Agency but *has not been installed*
  - SNO911 Subscriber Group will perform the programming at the Member Agency's staging location utilizing a Radio Management Client.
  - Boxes will be marked to indicate the radio inside has been updated.

Interim Programming Change Process

If reprogramming is necessary, the following must occur:

Template Review

- Any template changes MUST be reviewed and approved by the appropriate TAC.
  - **For Fire Templates only**, Fire-TAC has delegated approval authority to the Fire Template Committee.
  - Law-TAC maintains exclusivity in their approval authority.

Supporting Documents

- Changes must be outlined in the supporting documents
  - Ergonomics
    - Ergonomics will bear the version of the latest change to ergonomics in the title and header. As such, any template updates not affecting ergonomics will not receive a new Ergonomics Sheet.
  - Template Versioning Checklist
    - Internal status tracking document used for SNO911 and Motorola to standardize the approach and implementation of template updates. For all new template versions this sheet must show:
- New Version Number Assigned
- Template Version tracking starts
- Status to be updated on an ongoing basis to accurately reflect progress.
  - Visor Cards
    - Visor Cards will bear the version of the latest change to the Zone Channel Configuration in the title and header. As such, any template updates not affecting Zone Channel Assignments will not receive a new Visor Card.
  - Changelog
    - The Changelog is used to itemize changes applied in each version of template.
- This serves as a historical document for the life of each template class.

Radio Management Groups

- RM groups must be modified to house the new templates.
  - RM is configured to house *current* and *old* templates.
    - For *current templates* the naming convention applied to RM template groups is template name followed by version number
      - For example LAW_A_DH_01.4
    - For out-of-date or *old templates* the naming convention applied to RM template groups is template name followed by "0_OLD"
      - for example LAW_A_DH_0_OLD
    - This approach ensures all out-of-date versions of programming by customer and radio class are bundled together in one group. Only radios programmed with the current version of programming will reside in the group bearing a version number.
- Templates, once created, must be uploaded to RM
  - In Radio Management, radios are moved in bulk to the 0_OLD group per radio type and Member Agency.
- Scheduling of Jobs in RM
- Radios programmed
  - Once radios are confirmed to have the current programming, the radios will be moved from the 0_OLD group to the current Radio Management numbered version group.
- Any necessary agency notifications can be disseminated
  - Template Version tracking completes

5. Release Planning

5.1. Release of the Product

The following steps apply to installations for OPT IN Member Agencies, but are considered industry best practice, and are recommended for all OPT OUT installations as well, though SNO911 cannot enforce these standards for OPT OUT Installations.

After installation of each radio, testing is required for release to the Member Agency. At a minimum, the radio testing should include

- Wattmeter Testing
  - TX Forward Power
  - TX Reflected Power
  - VSWR measurement on ANALOG-TEST
    - 800 INTEROP Zone, Ch. position 14.
    - Include Wattmeter Serial Number
    - Voltage Drop testing during TX
- Voice Testing on ANALOG-TEST
  - 800 INTEROP Zone, Ch. Pos 14
- Performed with a portable radio configured with ANALOG-TEST as well. A simple voice check after VSWR and other tests will determine if the radio is operating properly.

5.2. Contingency Planning

Describe the contingency plan to be executed if problems occur during deployment activities.

■ Template Variations

● What if a Member Agency has purchased their own Mobile Radio using the reimbursement program but the featureset is different from the rest of the RRP Mobile Radios?

○ These radios should be brought up to the standard of the normal RRP Mobile Radios. In this case, being “brought up to the standard” addresses the feature set in the flashcode for the affected Mobile Radios.

■ If the Flashcode or featureset differs from the RRP standard templates the existing templates and programming will not work with the radio.

■ SNO911 has limited capacity for handling these as radios which do not conform to the existing standards require custom templates and programming necessitating several manhours of programming and quality assurance work.

● In ALL cases, this should be limited if not eliminated.

■ Member Agencies in possession of non-conforming radios will receive updates to bring these radios into Conformity. SNO911 will pay for these updates.

○ If such a radio *must* be entered into SNO911 systems, the template name shall include increments of “=” in place of “_” in the template name.

■ Examples:

● ARL PD_F_DH_01.4

○ Signifies a standard template

● ARL PD=F=DH=01.4

○ Signifies the first alternate template for this group

● ARL PD≡F≡DH≡01.4

○ Signifies the second alternate template for this group

● ARL PD╬F╬DH╬01.4

○ Signifies the third alternate template for this group

● ARL PD▉F▉DH▉01.4

○ signifies the fourth alternate for this group

■ *<u>Any of the above alternates are considered undesirable and every effort must be made to avoid this outcome.</u>*

■ Antenna Variations

● What about Antenna variances?
○ In all cases, OPT OUT member Agencies will receive a standard Tri-Band antenna package.
○ Covert vehicles (OPT IN only) will use a disguise antenna installed inside the vehicle with no penetrations to the outside.
■ Disguise antennas are not provided for OPT OUT users.

■ Coaxial Variations

Extended Length Coaxial

○ What about installations requiring longer runs of coaxial cabling than the standard 17' length?
■ There are 25' lengths available for larger vehicles.
■ These will be provided to MIT Installation Team for use as consumables.
● MIT Installation Teams must monitor the stock levels and provide plenty of notice in the event their stock runs low.
■ SNO911 will order replenishments, however cannot be held responsible if enough notice to place the order was not given to prevent work-stoppages.

Thick Roof Mount

○ What about thick-roofs?
■ There are Thick Roof NMO Kits available for vehicles requiring them.
■ These will be provided to MIT Installation Team for use as consumables.
● MIT Installation Teams must monitor the stock levels and provide plenty of notice in the event their stock runs low.
■ SNO911 will order replenishments, however cannot be held responsible if enough notice to place the order was not given to prevent work-stoppages.

Ground-Plane Free

○ What about fiberglass roofs?
■ For vehicles with inadequate ground planes to facilitate proper operation of the radio, SNO911 will provide to MIT Installation Team a selection of no-ground plane antennas.
● These antennas are to be used only for vehicles requiring antennas with no ground plane.
● MIT Installation Team should consider these to be consumables
○ Stock levels must be monitored and any low levels should be reported to SNO911 with sufficient notice to be able to place an order for replenishments before the stock at hand runs out.

■ Unprepared Vehicles

● What if the vehicle is not prepared for the installation?

○ In situations where the vehicle is unprepared for installation MIT Installation Team may turn away the appointment until such time as the vehicle can be prepared and rescheduled.

○ Reasons for MIT Installation Team appointment cancellation due to vehicle preparedness problems can include:

■ Vehicle has not had ALL firearms removed.

■ Loose Gear was not removed from the vehicle, impeding the installers ability to work.

■ The MIT Installation Team has deemed the vehicle unsafe for work.

■ The Member Agency representative dropping off the vehicle is unable to confirm installation details with MIT Installation Teams.

■ Member Agency is 30 or more minutes late to Installation Appointment.

■ Configuration Changes

● What if the Member Agency wishes to have their Mobile Radio configuration changed as a result of the installation?

○ The intended purpose of the Radio Replacement Plan is *radio replacement*. Significant deviations from previous layouts and configurations are not supported.

○ To this end, New Mobile Radio components are expected to go in the same locations as in the Old Radio configuration.

■ Deviations from this will result in project delays.

■ Deviations, if necessary, must be requested in writing well in advance of the Installation Appointment as specified earlier in this document.

○ As the RRP specifically focuses on Radio Replacement, the expressed intent is to avoid reconfiguration per user/installation. In the event a previous configuration was deemed undesirable by the Radio User a deviation will need to be requested in writing by that Radio User's chain of command.

■ If this is deemed by the Member Agency to be unacceptable, Member Agencies are encouraged to contact SNO911 PM for discussion and/or clarification.

○ Submit all requests for change to The SNO911 Project Manager.

○ With all that stated, some vehicles are slated for Dual-head when the original did not have it. This IS COVERED by the Radio Replacement plan and is specifically allowed under the terms of the Mobile Deployment Plan. **NEED LANGUAGE TO THIS EFFECT IN THE DOCUMENT.**

■ Faceplate Variations

● What about mounting the APX head in faceplates for consoles which will not fit the APX head?

○ Motorola is tasked with determining Faceplates and providing them to MIT Installation teams as consumables.

■ Radio is DOA

- What if a radio is received DOA?
  - **In Programming Phase**
    - Motorola will alert SNO911 Business Unit. The radio will be removed from the schedule and returned to Motorola for warranty service.
    - Upon return, the radio may be issued as normal.

  - **In Installation Phase**
    - MIT Installation Team will alert Member Agency and Motorola.
    - If the Member Agency can fulfill a replacement from the stock on-hand the installation can continue. If not, the appointment will be rescheduled after the radio is made operational again.
    - Motorola will inform SNO911 Business Unit who will coordinate the radio's return to Motorola for warranty service.

■ Missing Hardware

- What if hardware is missing from the Mobile Radio boxes from the factory?
  - Motorola has stated verbally that any missing hardware will obviously be addressed and SNO911 need not worry about this if it is encountered.

■ R56 deviations in Old Installations

- Installers might encounter non-R56 Installations that cannot be replicated "legally". What is the plan for this?
  - Old installations might not be R56 compliant, however all new installations must be.
    - It is incumbent on MIT Installation Team to ensure all of their installations meet this standard for OPT IN.
    - For OPT OUT, it is the responsibility of the Member Agency to ensure this standard is met.

■ RF Leaks

- What if Radio key-up triggers lights or other non-radio systems?
  - MIT Installation Teams will Troubleshoot this condition, as it falls under a Mobile Installation Quality Defect.

■ Unique Vehicles

● If a radio is to be installed in a new vehicle where no previous radio was installed, the general rule of thumb is to follow the precedent set in similar vehicles.
○ If no similar vehicles have been encountered, the installation will be considered unique, and can then be coordinated directly between MIT Installation Teams and the Member Agency?
○ MIT Installation Team is encouraged to document the decisions made in these sorts of installations so others like it have less to determine before work can be started.

■ Hovercraft and boats

Hovercraft and boats contain too many variables to pre-determine specific guidance.

● The official recommendation from SNO911 SGs is to consider these unique installations requiring direct interface between MIT Installation Teams and the Member Agency.
● These and any vehicle types or configuration not previously encountered or documented are the only scenarios this loose approach is allowable.
● All Quality Assurance considerations and knowledge from other vehicle types must be adhered to as much as possible in the installation of radios in Boats and Aircraft.

■ Illegal / Hazardous Substances

● What if contraband / illegal substances / hazardous materials / weapons are encountered by the MIT Installation Teams during the installation?
○ MIT Installation team must inform the Member Agency of their discovery and cease working in the immediate area until the Member Agency can remove it from the vehicle.
○ MIT Installation Team is not authorized to handle any illegal materials they may encounter.
■ *This may result in work slow-downs until the Member Agency Representative is available to address the situation.*

5.3. End of Life Planning for Removed Equipment

The nature of this project is radio replacement. Installations are expected to cover removal of an old radio prior to installation of a new APX8500 in most cases.

■ Hardware Turnover

● Old radios removed to facilitate installation of an RRP radio must be turned over to SNO911 by the Member Agency so the radio ID can be harvested and the radio blanked.

■ Blanking of Old Radios

● Radios which will be blanked will
○ have their individual Radio IDs harvested and reclaimed for reuse.
○ Then be quarantined until the radio is blanked.
■ The radio will function internally as if there was no programming inside.
○ Once blanked, the radio will be marked with a sticker reading "I've been Blanked!", collected in an area for customer pickup. Once collected, the radio is the Member Agency's to dispose of as they see fit.

Radios Which Cannot be Blanked

● Some radios cannot be blanked due to programming limitations.
○ These radios will be marked "No Resale Value", as the radios will be rendered unprogrammable without a SNO911 Advanced Security Key.
○ As SNO911 will not be lending out Advanced Security Keys under any circumstances, these radios are effectively "bricked" or inoperable past this point.
○ Radios unable to be blanked shall be quarantined until trunked system 7F32 is rendered inoperable.
■ Only after this point will SNO911 SG be able to return the radio to the Member Agency from which it came.

■ Disposition of Blanked Radios

● *In no case* will SNO911, Motorola or MIT Installation Teams
○ Destroy/dispose of old radios
■ ALL radios must be returned to their owning Member Agency.
○ Prepare the Old Radios for Member Agency reuse after removal.
■ This is beyond the scope of the Radio Replacement Plan.

6. Attachments

Document No.	Document Title	Date	Author
	Mobile Installation Checklist	16JUN2021	Eric Marshall Schoonmaker SNO911 SG
	APX8500 Minimum Installation Standards v2.0	25JAN2021	Eric Marshall Schoonmaker SNO911 SG
8P81089E50-C	R56 Mobile Installation Standards and Techniques	APRIL 2017	Motorola Solutions
	Version 1.2 Subscriber Installation Guideline EXCERPTS		Larry Young Motorola Solutions
	Mobile Radio Programming Process	21JUN2021	Joe Harris Motorola Solutions Eric Marshall Schoonmaker SNO911 SG
	RRP OPT OUT Installation Quality Defect Questionnaire	11FEB2-21	Eric Marshall Schoonmaker SNO911 SG
	GPS/WiFi Antenna Preferred Placement Per Body Style	02JUL2021	Eric Marshall Schoonmaker SNO911 SG
	Install Checklist	2020	Dan Gilliland Motorola Solutions

7. Glossary

Define all terms and acronyms required to interpret the Deployment Plan properly.

- APX 8000
  - Motorola APX8000 Portable Radio (Hand-held)
- APX8500
  - Motorola APX8500 Mobile Radio (In-vehicle, console, etc)
- Custom Mounting Hardware
  - Hardware specifically designed to facilitate a Mobile Radio System (or a component of) installation beyond the typical installation.
    - The term "Custom" specifies that these mounts required considerable labor beyond that which is typical for a Mobile Radio Installation, to the point the mount was substantially modified beyond the manufacturer's factory-shipped standard mounting hardware.
- Ergonomic Document
  - A document for the End Users outlining the functions of buttons, home keys and menu items for the APX8000 and APX8500 series radios and their supported control heads.
- Member Agency
  - First Responder Agency utilizing SNO911 Comm System
- Major Changes
  - Member Agency requested changes to Mobile Radio configuration between Old Radio and New Radio that will require exploratory work by the MIT Installation Team to fulfill.
  - These changes will likely utilize new mounting holes, or require new cable passages be discovered and utilized.
  - These types of changes require significant Installation Team man-hours to satisfy, and as such must be requested in writing by MIT Installation Team no less than 5 business days prior to the Installation Appointment.
  - MIT Installation Teams have decision making authority in the event a change is questionably Minor or Major.
- Minor Changes
  - Member Agency requested changes to Mobile Radio configuration between Old Radio and New Radio that require minimal effort by the Installation Team to accommodate.
  - These changes utilize some if not all existing mounting/cable passage holes.
  - No exploratory work is required to fulfill a minor change.
  - Minor Changes can be requested on the day of service.
  - MIT Installation Teams have decision making authority in the event a change is questionably Minor or Major.
- MIT Installation Team(s)
  - The contractor selected by Motorola to install radios for all Member Agencies selecting OPT-IN installation.
- New Radio
  - A Radio Replacement Plan Motorola APX series radio.
- Old Radio
  - The pre-Radio Replacement Plan mobile radio equipment slated for removal, harvesting/blanking. These radios and their peripherals will be removed entirely from service as part of the RRP.
- OPT-IN
  - Member Agencies who have selected OPT-IN will receive installation services by MIT Installation Teams.
  - Follow-up troubleshooting if necessary will be coordinated by Member Agency and SNO911.
- OPT-OUT
  - Member Agencies who have selected OPT-OUT will coordinate their own installations with a service of their choosing and at their expense.
  - Follow-up troubleshooting if necessary will be coordinated by Member Agency and their installation team or another outside vendor, not SNO911.
- Radio Replacement Plan (RRP)
  - The project upgrading Snohomish County 911 Member Agency radios from legacy hardware to new APX 8000 series radios.
  - This upgrade and replacement also includes the aging infrastructure systems located at radio sites in use throughout Snohomish County.
- SNO911
  - Snohomish County 911
- Standard Mounting Hardware
  - The mass-produced manufacturer provided mounting hardware typically shipped from the factory with a radio, requiring no custom work to install.
    - The opposite of Custom Mounting Hardware

- Subscriber
  - 1: User of a portable or mobile radio that is affiliated with a radio system
  - 2: Mobile or Portable Radios affiliated with a radio system
- Subscriber Group
  - SNO911 Staff primarily focused on subscriber work. These employees frequently interface with PM, RM and other infrastructure elements facilitating Subscriber operations.
- Visor Guide
  - A Zone Channel Map for end users.
- Zone Channel Assignment
  - The order of Zones and channels within the programming of an RRP Radio.
- Zone Channel Map
  - A document which conveys the Zone Channel Assignments in the programming of an RRP Radio.

• Approval Signatures

This document has been reviewed and accepted as the operational guideline for the Mobile Deployment phase of the Radio Replacement Project.

Signed:	Agency	Date:
Signed:	Agency	Date:
Signed:	Agency	Date:
Signed:	Agency	Date:
Signed:	Agency	Date:

● VERSION 1.2 SUBSCRIBER INSTALLATION GUIDELINE - Excerpts

● This document was made in the early stages of the Radio Replacement Plan. Most of the assertions are:
○ Incorporated into the Mobile Deployment Plan if found to remain accurate
○ Obsolete due to further research and involvement
● The points presented in this document are presented for informational purposes.
○ Due to the extensive hands-on research that went into the development of this document there is tremendous value to its findings, even if some of the information has since come out of date.
○ Consider this document of lesser authority than the mobile Deployment Plan which was developed in coordination between involved parties closer to the actual deployment of Mobile Radios.
■ **If contradictions are found between this document and the Mobile Deployment Plan, the Mobile Deployment Plan shall prevail.**

■ Lynnwood PD: (2018 Ford Utility Interceptor) Patrol Unit ID: 368

Mobile Installation Preview

• Existing Radio: MCS2000 remote mt.

Lynnwood PD: (2018 Ford Utility Interceptor) Patrol Unit ID: 368

Mobile Installation Preview

(2018 Ford Utility Interceptor) • Existing Antenna Type/location: Shark, roof-top center

- Charge Guard or equivalent, timer-based DC power disconnect? Yes, solenoid.
- Vehicle Intercom radio interface? No.
- Vehicle Siren/PA unit to radio interface? See Global Install Notes 13.
- **Replace radio control head mounting faceplate? See Global Installation Notes 11.**
- **Transceiver, speaker, mike mounting locations reusable? Yes. Transceiver mounts in rear equipment box; Speaker above driver seat. Mike mag mount front of the console.**
- **DC power distribution re-usable? Yes.**
- **Unique Notes: Running new control cables.**

Lynnwood PD: (2018 Ford Utility Interceptor) Patrol Unit ID: 368

Mobile Installation Preview

■ Lynnwood PD: Harley Davidson Motorcycle

■ (Road King Classic) Patrol Unit ID: 270

Mobile Installation Preview

• Existing Radio: APX7500 remote mt. + 05 ctrl. head

Lynnwood PD: Harley Davidson Motorcycle (Road King Classic) Patrol Unit ID: 270

Mobile Installation Preview

- Existing Antenna Type/location: 1⁄2 wave loaded Radial Larsen. New GPS antenna to be placed just in front of existing antenna mount.
- Charge Guard or equivalent, timer-based DC power disconnect? No.
- Vehicle Intercom radio interface? No, but uses wireless headset interface: when driver steps off bike, unit auto transfers to wireless headset.
- Vehicle Siren/PA unit to radio interface? No.
- Replace radio control head mounting faceplate? n/a
- Transceiver, speaker, mike mounting locations reusable? **Yes.**
- DC power distribution re-usable? Yes.

Lynnwood PD: Harley Davidson Motorcycle (Road King Classic) Patrol Unit ID: 270

Mobile Installation Preview

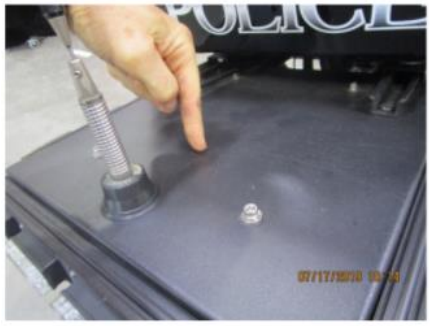

■ South County Fire: (H&W Warrior Emergency Vehicle)

Fire Engine ID: 114

Mobile Installation Preview

• Existing Radio: XTL5000 Remote Mount. + 05 Ctrl. Head

South County Fire: (H&W Warrior Emergency Vehicle) Fire Engine ID: 114

Mobile Installation Preview

- Existing Antenna Type/location: Cab top right side front. Re-use existing 800 mounting hole. GPS antenna mount next to 2 existing GPS antennas.
- Charge Guard or equivalent, timer-based DC power disconnect? No.
- Vehicle Intercom radio interface? David Clark U3805. Re-use existing access. cable
- Vehicle Siren/PA unit to radio interface? See Global Install Notes 13.
- Replace radio control head mounting faceplate? n/a
- Transceiver, speaker, mike mounting locations reusable? Yes.
- **DC power distribution re-usable? Yes: Ctrl head DC power is from fuse box console top ctr. Transceiver power is from the right Passenger side front checker plate panel.**
- Unique Notes:

South County Fire: (H&W Warrior Emergency Vehicle) Fire Engine ID: 114

Mobile Installation Preview

■ South County Fire: (Ford E Series Ambulance)

Paramedic ID: 189

Mobile Installation Preview

• Existing Radio: XTL2500 Remote Mt.

South County Fire: (Ford E Series Ambulance) Paramedic ID: 189

Mobile Installation Preview

- Existing Antenna Type/location: 1⁄4 wave 800 spike + 800 loaded antenna. Put a new antenna in the location of salt-shaker low profile antenna. New GPS antenna must be mounted directly above the ceiling light fixture.
- Charge Guard or equivalent, timer-based DC power disconnect? Yes, but not used for radios.
- Vehicle Intercom radio interface? David Clark system. Must build an interface.
- Vehicle Siren/PA unit to radio interface? See Global Install Notes 13.
- Replace radio control head mounting faceplate? Braun custom console box and faceplate cut- outs. Need to supply a new Braun cover plate to place a new APX 05 control head.
- Transceiver, speaker, mike mounting locations reusable? Yes.
- DC power distribution re-usable?
- Unique Notes:

South County Fire: (Ford E Series Ambulance) Paramedic ID: 189

Mobile Installation Preview

■ Everett PD: Mobile Command Center

(Ford F650 Truck w. BRAUN Module)

Mobile Installation Preview

• Existing Radios: 4 Astro Spectra Dash Mt.

Everett PD: Mobile Command Center (Ford F650 Truck w. BRAUN Module)

Mobile Installation Preview

- Existing Antenna Type/location: Cab radio antenna on front roof. 2 others on the module roof down centerline. GPS antenna goes on the cab roof. No antennas can go on the module roof.
- Charge Guard or equivalent, timer-based DC power disconnect? No.
- Vehicle Intercom radio interface? No.
- Vehicle Siren/PA unit to radio interface? No.
- Replace radio control head mounting faceplate? n/a
- Transceiver, speaker, mike mounting locations reusable? Yes.
- DC power distribution re-usable? No. New DC power wiring to existing DC distribution node.
- Unique Notes:

Everett PD: Mobile Command Center (Ford F650 Truck w. BRAUN Module)

Mobile Installation Preview

■ Everett PD: (Ford Interceptor)

Police Utility ID: P0415

Mobile Installation Preview

• Existing Radio: APX 6500 + 05 Control Head

Everett PD: (Ford Interceptor) Police Utility ID: P0415

Mobile Installation Preview

- Existing Antenna Type/location: 1⁄2 wave loaded Larsen antenna. Install GPS antenna on either driver or passenger side of roof, forward of existing radio antenna. See Global Installation Notes 14.
- Charge Guard or equivalent, timer-based DC power disconnect? Yes. Yellow unit front console floor.
- Vehicle Intercom radio interface? No.
- Vehicle Siren/PA unit to radio interface? Has Whelen Wecan controller. See Global Install Notes 13.
- Replace radio control head mounting faceplate? No. Existing plate OK.
- Transceiver, speaker, mike mounting locations reusable? Yes.
- DC power distribution re-usable? Yes. Use Ford Factory Charge Guard timer output. See Global Installation Notes 10.
- Unique Notes:

Everett PD: (Ford Interceptor) Police Utility ID: P0415

Mobile Installation Preview

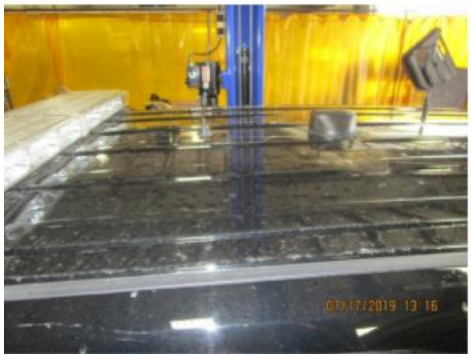

■ Everett PD: (Ford Crown Victoria Sedan)

Patrol Vehicle ID: 30258

Mobile Installation Preview

• Existing Radio: MCS2000 Dash Mt.

Everett PD: (Ford Crown Victoria Sedan) Patrol Vehicle ID: 30258

Mobile Installation Preview

- Existing Antenna Type/location: 1⁄4 wave 800 spike on trunk. Use the existing 800 spike antenna hole for GPS on the trunk lid. For a multi-band antenna, use the second existing trunk lid antenna hole.
- Charge Guard or equivalent, timer-based DC power disconnect? Yes, Charge Guard.
- Vehicle Intercom radio interface? No.
- Vehicle Siren/PA unit to radio interface? Yes. Federal Signal Touchmaster PA rebroadcast connection to radio. Also see Global Install Notes 13.
- Replace radio control head mounting faceplate? Yes. See Global Installation Notes 11. Also need replacement faceplate for Touchmaster Siren.
- Transceiver, speaker, mike mounting locations reusable? Yes.
- **DC power distribution re-usable? Partially: Control head power from yellow Charge Guard timer. Main radio power leads DC power from the DC cable under the passenger side floor, which hooks directly to the battery.**
- Unique Notes:

Everett PD: (Ford Crown Victoria Sedan) Patrol Vehicle ID: 30258

Mobile Installation Preview

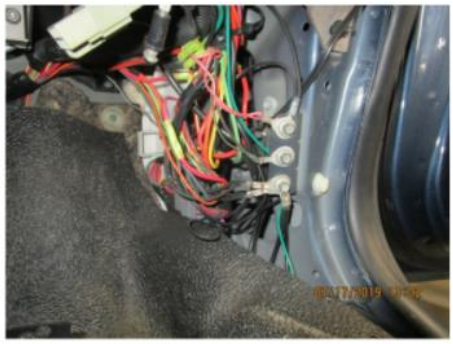

■ Everett PD: (Ford F150 w. Shell)

Unmarked Patrol ID: P0447

Mobile Installation Preview

• Existing Radio: MCS2000 Dash Mt.

Everett PD: (Ford F150 w. Shell) Unmarked Patrol ID: P0447

Mobile Installation Preview

- Existing Antenna Type/location: 1⁄4 wave 800 spike inside camper shell on shelf at right front corner. Re-use this location. **Do Not mount any new GPS antenna! Laptop already has a GPS antenna system.**
- Charge Guard or equivalent, timer-based DC power disconnect? Yes. Charge Guard timer connected to radio fuse block.
- Vehicle Intercom radio interface? n/a
- Vehicle Siren/PA unit to radio interface? Yes. Whelan (Syncom Sapphire) has a radio interface. Also see Global Install Notes 13.
- Replace radio control head mounting faceplate? Yes. See Global Installation Notes 11.
- Transceiver, speaker, mike mounting locations reusable? Yes. Microphone is a mag-mount.
- DC power distribution re-usable? Don’t use the console fuse block., except for the ignition timer sense. Run the radio high current leads directly to the battery.
- Unique Notes:

Everett PD: (Ford F150 w. Shell) Unmarked Patrol ID: P0447

Mobile Installation Preview

■ Everett Fire: HazMat/Special Ops

(5th Wheel Trailer HM-1)

Mobile Installation Preview

• Existing Radio: 2 MCS2000 [trailer]; 2 MCS2000 [tow vehicle]

Everett Fire: HazMat/Special Ops (5th Wheel Trailer HM-1)

Mobile Installation Preview

- Existing Antenna Type/location: Cab (tow rig) radio and new GPS antenna to existing cab rooftop antenna slots. Re-use existing trailer rooftop antenna mounting holes.
- Charge Guard or equivalent, timer-based DC power disconnect? No.
- Vehicle Intercom radio interface? Tow rig has David Clark intercom. Trailer has no intercom.
- Vehicle Siren/PA unit to radio interface? n/a
- Replace radio control head mounting faceplate? n/a
- Transceiver, speaker, mike mounting locations reusable? Yes.
- DC power distribution re-usable? Yes.
- Unique Notes: Long difficult coax runs for trailer.

Everett Fire: HazMat/Special Ops (5th Wheel Trailer HM-1)

Mobile Installation Preview

■ Everett Fire: (International)

Medic Unit ID: V0207

Mobile Installation Preview

• Existing Radio: XTL2500 Remote Mt. + dual Ctrl. Heads

Everett Fire: (International) Medic Unit ID: V0207

Mobile Installation Preview

- Existing Antenna Type/location: Rooftop center (2 antennas) and rooftop rear. GPS antenna to the right side of xos. All other antennas re-use existing antenna holes.
- Charge Guard or equivalent, timer-based DC power disconnect? No.
- Vehicle Intercom radio interface? Yes. Firecom Tomas 940. No RR.
- Vehicle Siren/PA unit to radio interface? No.
- Replace radio control head mounting faceplate? n/a
- Transceiver, speaker, mike mounting locations reusable? Yes.
- DC power distribution re-usable? Yes.
- Unique Notes: No direct way from tow rig cab to trailer interior box.

Everett Fire: (International) Medic Unit ID: V0207

Mobile Installation Preview

■ Everett Fire: (Battalion One, Chevy Tahoe)

Command Rig ID: V0270

Mobile Installation Preview

• Existing Radio: 2 MCS2000 Remote Mt. + dual Ctrl. Heads

Everett Fire: (Battalion One, Chevy Tahoe) Command Rig ID: V0270

Mobile Installation Preview

- Existing Antenna Type/location: qty 2 1⁄2 wave loaded Larsen antennas.
- Charge Guard or equivalent, timer-based DC power disconnect? No.
- Vehicle Intercom radio interface? Firecom intercom to both MCS2000 radios. Installer to investigate and duplicate accessory interface configuration. Customer to order MR-52X radio interface cables from Firecom for any vehicle that has a Firecom system and a non APX/XTL radio.
- Vehicle Siren/PA unit to radio interface? No.
- Replace radio control head mounting faceplate? Needs 2 new faceplates for two (2) new 05 series control heads. See Global Installation Notes 11.
- Transceiver, speaker, mike mounting locations reusable? Yes.
- DC power distribution re-usable? Yes.
- Unique Notes: Second new APX radio is only for continuous monitoring Ch.16. However, utilization of a portable radio in lieu of a second APX mobile is not an option, since vehicle operators need to monitor via headsets at all times.

Everett Fire: (Battalion One, Chevy Tahoe) Command Rig ID: V0270

Mobile Installation Preview

■ Everett Fire: (Ford E-450)

Paramedic M1 ID: V0257

Mobile Installation Preview

• Existing Radio: APX6500 Dash Mt. 05 Ctrl. Head

Everett Fire: (Ford E-450) Paramedic M1 ID: V0257

Mobile Installation Preview

- Existing Antenna Type/location: Rooftop center line. Re-use front center edge mount hole for multi-band antenna. New GPS antenna hole to be located in the main box right front corner, accessible from the interior main power panel.
- Charge Guard or equivalent, timer-based DC power disconnect? No. Also no battery switches.
- Vehicle Intercom radio interface? Yes. Firecom intercom to radio.
- Vehicle Siren/PA unit to radio interface? Yes. Whelan siren PA interface to radio. Also see Global Install Notes 13.
- Replace radio control head mounting faceplate? Re-use existing dash mount overlay faceplate mount.
- Transceiver, speaker, mike mounting locations reusable? Yes. Note that the radio speaker is inside the console box, making it hard to hear...but the agency mostly just uses intercom headsets.
- DC power distribution re-usable? Yes. DC power to radio from box front wall top center fuse box.
- Unique Notes

Everett Fire: (Ford E-450) Paramedic M1 ID: V0257

Mobile Installation Preview

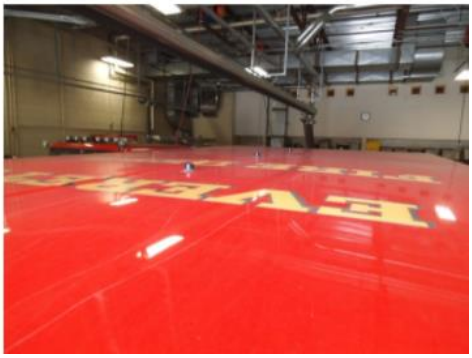

■ Everett Fire: (Rosenbauer)

Fire Engine ID: J0118

Mobile Installation Preview

• Existing Radio: XTL2500 Dash Mt.

Everett Fire: (Rosenbauer) Fire Engine ID: J0118

Mobile Installation Preview

• Existing Antenna Type/location: Reuse rooftop centerline antenna mounting holes. GPS antenna reuse one of existing unused mounting holes.

• Charge Guard or equivalent, timer-based DC power disconnect? No.

• Vehicle Intercom radio interface? Yes. Firecom connected to the existing XTL2500.

• Vehicle Siren/PA unit to radio interface? See Global Installation Notes 13.

• Replace radio control head mounting faceplate? Yes. See Global Installation Notes 11.

• Transceiver, speaker, mike mounting locations reusable? Yes.

• DC power distribution re-usable? Console DC distribution may not be satisfactory. Alternate distribution node is at the fuse block behind the right side passenger kick-plate.

• Unique Notes:

Everett Fire: (Rosenbauer) Fire Engine ID: J0118

Mobile Installation Preview

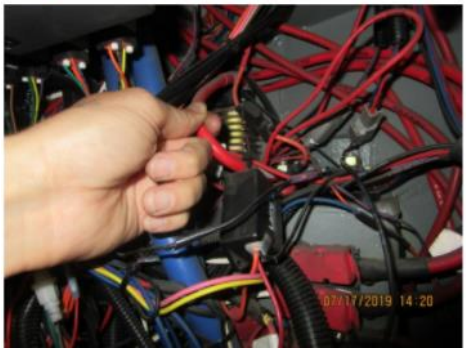

■ Everett Fire: (American LaFrance)

Fire Engine ID: J0064

Mobile Installation Preview

• Existing Radio: MCS2000 Dash Mt.

Everett Fire: (American LaFrance) Fire Engine ID: J0064

Mobile Installation Preview

- Existing Antenna Type/location: For new antennas and GPS antenna, use abandoned NMO rooftop antenna holes.
- Charge Guard or equivalent, timer-based DC power disconnect? No.
- Vehicle Intercom radio interface? Yes. David Clark to existing MCS2000.
- Vehicle Siren/PA unit to radio interface? No.
- Replace radio control head mounting faceplate? n/a.
- Transceiver, speaker, mike mounting locations reusable? Yes.
- DC power distribution re-usable? Yes. DC power from dash top center fuse block below removable cover.
- Unique Notes:

Everett Fire: (American LaFrance) Fire Engine ID: J0064

Mobile Installation Preview

■ Sheriff: (Ford Transit 350)

Jail Transport ID: UJ36

Mobile Installation Preview

• Existing Radio: MCS2000 Dash Mt.

Sheriff: (Ford Transit 350) Jail Transport ID: UJ36

Mobile Installation Preview

- Existing Antenna Type/location: 1⁄2 wave 800 MHz loaded Larsen, cab roof top front. New GPS antenna on right passenger side of roof across from 800 MHz antenna location.
- Charge Guard or equivalent, timer-based DC power disconnect? No.
- Vehicle Intercom radio interface? No.
- Vehicle Siren/PA unit to radio interface? No.
- Replace radio control head mounting faceplate? n/a
- Transceiver, speaker, mike mounting locations reusable? Yes.
- DC power distribution re-usable? n/a. Run radio power directly to the battery under the driver's seat.
- Unique Notes:

Sheriff: (Ford Transit 350) Jail Transport ID: UJ36

Mobile Installation Preview

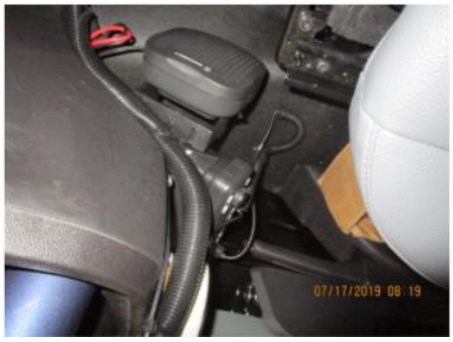

■ Sheriff: (20’ Aluminum River Boat)

Marine Boat ID: NS75

Mobile Installation Preview

• Existing Radio: MCS2000 Remote Mt.

Sheriff: (20’ Aluminum River Boat) Marine Boat ID: NS75

Mobile Installation Preview

- Existing Antenna Type/location: VHF bottom loaded on right rear corner transum. Re-use this location for a new multi-band antenna. New GPS antenna to be mounted on the left rear corner transum.
- Charge Guard or equivalent, timer-based DC power disconnect? No.
- Vehicle Intercom radio interface? n/a
- Vehicle Siren/PA unit to radio interface? n/a
- Replace radio control head mounting faceplate? n/a. Mount a new control head inside the existing protective box atop the steering column.
- Transceiver, speaker, mike mounting locations reusable? Partially. Old radio is inside a hinged protective box. New remote mount transceiver won’t use a protective box. New mike and speaker mounted in existing locations.
- DC power distribution re-usable? No. Existing DC block in steering column unit too small. Run new radio DC wiring directly to the battery shut-off switch in the rear cabinet.
- Unique Notes:

Sheriff: (20’ Aluminum River Boat) Marine Boat ID: NS75

Mobile Installation Preview

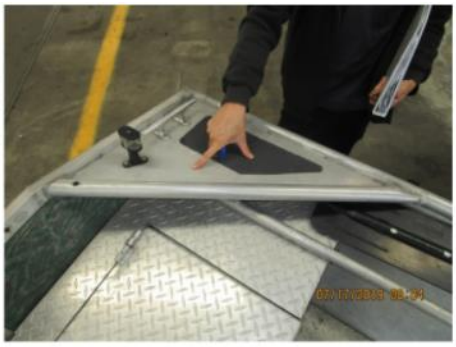

■ Sheriff: (Chevy Caprice Sedan)

Patrol Vehicle ID: 795

Mobile Installation Preview

• Existing Radio: MCS2000 Remote Mt.

Sheriff: Patrol Vehicle ID: 795 (Chevy Caprice Sedan)

Mobile Installation Preview

- Existing Antenna Type/location: 1⁄2 wave PCTel antenna. Re-use same antenna hole. New GPS antenna to re-use existing old modem mt. antenna hole on trunk.
- Charge Guard or equivalent, timer-based DC power disconnect? No.
- Vehicle Intercom radio interface? No.
- Vehicle Siren/PA unit to radio interface? Yes. Whelan radio PA “rebroadcast” input. Also see Global Install Notes 13.
- Replace radio control head mounting faceplate? Yes. See Global Installation Notes 11.
- Transceiver, speaker, mike mounting locations reusable? Yes.
- DC power distribution re-usable? Partially. Ground source Inside console box OK. Run radio power directly to the battery or factory fuse post.
- Unique Notes: Wire size: If factory built, wire size is not an issue. If the PDU was installed in the field, use Best Practices as a guide. Don’t connect factory installed if the wire gauge is not sufficient.

Sheriff: Patrol Vehicle ID: 795 (Chevy Caprice Sedan)

Mobile Installation Preview

■ Sheriff: (Ford Explorer Interceptor Utility)

Transit Patrol ID: XX813

Mobile Installation Preview

• Existing Radio: APX6500 Dash Mt. 05 Ctrl Head

Sheriff: (Ford Explorer Interceptor Utility) Transit Patrol ID: XX813

Mobile Installation Preview

- Existing Antenna Type/location: 1⁄2 wave PCTEL antenna. Re-use for multi-band antenna. New GPS antenna to be mounted in the new hole right side front roof top. See finger point photo.
- Charge Guard or equivalent, timer-based DC power disconnect? No. Uses a solenoid & master switch only.
- Vehicle Intercom radio interface? No.
- Vehicle Siren/PA unit to radio interface? Yes. Whelan radio PA “rebroadcast” connection. Also See Global Install Notes 13.
- Replace radio control head mounting faceplate? No. However, Most existing units use MCS2000 radios, which will require new faceplates. See Global Installation Notes 11.
- Transceiver, speaker, mike mounting locations reusable? Yes. May reuse mike clips.
- DC power distribution re-usable? Yes. DC distribution already in console. 7/16” socket and fuse.
- Unique Notes:

Sheriff: (Ford Explorer Interceptor Utility) Transit Patrol ID: XX813

Mobile Installation Preview

■ Marysville PD: (Chevy Interceptor Sedan)

Patrol Vehicle ID: P153

Mobile Installation Preview

• Existing Radio: XTL2500 Dash Mt.

Marysville PD: (Chevy Interceptor sedan) Patrol Vehicle ID: P153

Mobile Installation Preview

- Existing Antenna Type/location: 1⁄2 wave loaded Larsen. Re-use for multi-band antenna. New GPS antenna offset from multi-band antenna on passenger side front roof.
- Charge Guard or equivalent, timer-based DC power disconnect? No. Soft power off to the control head.
- Vehicle Intercom radio interface? No.
- Vehicle Siren/PA unit to radio interface? Unknown. See Global Install Notes 13.
- Replace radio control head mounting faceplate? Yes. See Global Installation Notes 11.
- Transceiver, speaker, mike mounting locations reusable? Yes.
- DC power distribution re-usable? Partial. DC power node available inside console. If there are any questions about insufficient wire gauge size, radio DC power cables can go directly to the battery.
- Unique Notes:

Marysville PD: (Chevy Interceptor sedan) Patrol Vehicle ID: P153

Mobile Installation Preview

■ Marysville PD: (Ford F150 Truck w. Camper)

Patrol Vehicle ID: P180

Mobile Installation Preview

• Existing Radio: XTL2500 Dash Mt.

Marysville PD: (Ford F150 Truck w. Camper) Patrol Vehicle ID: P180

Mobile Installation Preview

- Existing Antenna Type/location: 1⁄2 wave 800 Larsen on rooftop front centerline. Re-use existing antenna holes. New GPS antenna to be mounted in new hole offset from existing data antenna on driver side roof.
- Charge Guard or equivalent, timer-based DC power disconnect? No.
- Vehicle Intercom radio interface? No.
- Vehicle Siren/PA unit to radio interface? Unknown. See Global Installation Notes 13.
- Replace radio control head mounting faceplate? Yes. See Global Installation Notes 11.
- Transceiver, speaker, mike mounting locations reusable? Yes.
- DC power distribution re-usable? Yes. Located inside the console unit.
- Unique Notes:

Marysville PD: (Ford F150 Truck w. Camper) Patrol Vehicle ID: P180

Mobile Installation Preview

■ Marysville PD: (Lenco BEARCAT w. armor plate)

SWAT Vehicle ID: J053

Mobile Installation Preview

• Existing Radio: MCS2000 Dash Mt.

Marysville PD: (Lenco BEARCAT w. armor plate) SWAT Vehicle ID: J053

Mobile Installation Preview

- Existing Antenna Type/location: 1⁄2 wave loaded Larsen located on top of rear left-side turn signal box. Replace cable run with 25’ length. New GPS antenna location TBD, likely to be clamped to a rail.
- Charge Guard or equivalent, timer-based DC power disconnect? No.
- Vehicle Intercom radio interface? No.
- Vehicle Siren/PA unit to radio interface? No.
- Replace radio control head mounting faceplate? Partial. Need custom faceplate mount 5” x 11 3⁄4”.
- Transceiver, speaker, mike mounting locations reusable? Yes.
- DC power distribution re-usable? Yes. Located in the console unit.
- Unique Notes: Vehicle is built using a 3/16” armor plate. Must work around any new penetrations as much as possible.

Marysville PD: (Lenco BEARCAT w. armor plate) SWAT Vehicle ID: J053

Mobile Installation Preview

■ Marysville PD: (Ford Crown Victoria Sedan)

Patrol Vehicle ID: P140

Mobile Installation Preview

• Existing Radio: MCS2000 Dash Mt.

Marysville PD: (Ford Crown Victoria sedan) Patrol Vehicle ID: P140

Mobile Installation Preview

- Existing Antenna Type/location: PCTel 800 MHz antenna. Do not re-use existing antenna mount hole, because of previous silicone sealed leaks. Use hole plug, and drill new multi-band antenna hole near to existing hole. Mount new GPS antenna on trunk left side lid.
- Charge Guard or equivalent, timer-based DC power disconnect? No. Note that the unit has dual batteries.
- Vehicle Intercom radio interface? No.
- Vehicle Siren/PA unit to radio interface? No. Do not connect the Whelan radio interface.
- Replace radio control head mounting faceplate? See Global Installation Notes 11.
- Transceiver, speaker, mike mounting locations reusable? Yes.
- DC power distribution re-usable? See Global Installation Notes 3.
- Unique Notes:

Marysville PD: (Ford Crown Victoria sedan) Patrol Vehicle ID: P140

Mobile Installation Preview

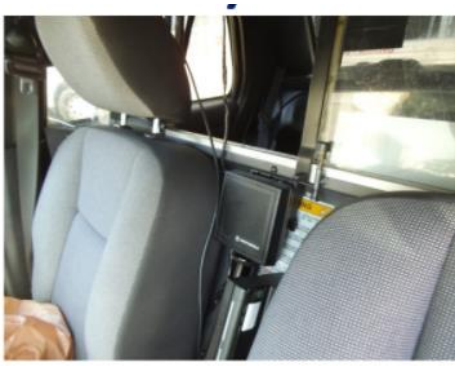

■ Marysville PD: (2017 Ford Explorer)

Patrol Vehicle ID: P177

Mobile Installation Preview

• Existing Radio: XTL5000 Dash Mt.

Marysville PD: (2017 Ford Explorer) Patrol Vehicle ID: P177

Mobile Installation Preview

- Existing Antenna Type/location: 1⁄2 wave loaded 800 MHz antenna. Re-use existing 800 antenna mounting hole. New GPS antenna mounted offset on front right passenger side of roof.
- Charge Guard or equivalent, timer-based DC power disconnect? No.
- Vehicle Intercom radio interface? No.
- Vehicle Siren/PA unit to radio interface? Yes. Whelan PA “rebroadcast” radio interface. Also see Global Install Notes 13.
- Replace radio control head mounting faceplate? No. Existing XTL5000 dash mt. The radio faceplate opening should be the same for 05 series APX dash mount radio.
- Transceiver, speaker, mike mounting locations reusable? Yes.
- DC power distribution re-usable? Re-use existing console DC power distribution node.
- Unique Notes:

Marysville PD: (2017 Ford Explorer) Patrol Vehicle ID: P177

Mobile Installation Preview

■ Marysville Fire: (Chevy Suburban)

Command Vehicle ID: 02

Mobile Installation Preview

• Existing Radio: MCS2000 Remote Mt. + Dual Ctrl. Heads

Marysville Fire: (Chevy Suburban) Command Vehicle ID: 02

Mobile Installation Preview

- Existing Antenna Type/location: Maxrad 1⁄2 wave 800 MHz loaded antenna. Re-use existing roof mount hole. New GPS antenna to be mounted on the rooftop center.
- Charge Guard or equivalent, timer-based DC power disconnect? Yes. Havis CGX unit.
- Vehicle Intercom radio interface? Yes. Firecom Model 210.
- Vehicle Siren/PA unit to radio interface? Unknown. See Global Installation Notes 13.
- Replace radio control head mounting faceplate? Yes. See Global Installation Notes 11.
- Transceiver, speaker, mike mounting locations reusable? Yes.
- DC power distribution re-usable? Yes.
- Unique Notes: dual Control heads to remote mount transceiver.

Marysville Fire: (Chevy Suburban) Command Vehicle ID: 02

Mobile Installation Preview

■ Marysville Fire: (International)

Paramedic Xport ID: 28

Mobile Installation Preview

• Existing Radio: MCS2000 Remote Mt. + Dual Ctrl. Heads

Marysville Fire: (International) Paramedic Xport ID: 28

Mobile Installation Preview

- Existing Antenna Type/location: Maxrad 1⁄2 wave loaded 800 MHz antenna. Re-use existing antenna mounting hole. New GPS antenna mount directly above module ceiling light.
- Charge Guard or equivalent, timer-based DC power disconnect? Yes. Shuts off power after 15 minutes.
- Vehicle Intercom radio interface? Yes. Firecom intercom system.
- Vehicle Siren/PA unit to radio interface? See Global Installation Notes 13.
- Replace radio control head mounting faceplate? Partial. Don't remove the existing console faceplate structure. Add new (ABS plastic or better) faceplate cover. Day Wireless to dimension.
- Transceiver, speaker, mike mounting locations reusable? Yes.
- DC power distribution re-usable? Yes. Located under the existing console. Need new power to both new control heads (DC+ and grounds), because existing MCS2000 dual control heads didn't get power separately.
- Unique Notes:

Marysville Fire: (International) Paramedic Xport ID: 28

Mobile Installation Preview

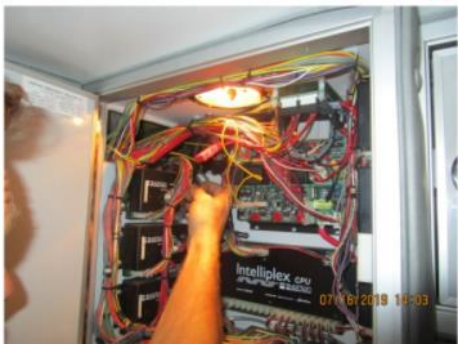

■ Marysville Fire: (2019 Ford E450)

Paramedic Xport ID: 31

Mobile Installation Preview

• Existing Radio: APX8500 Remote Mt. + 05 Ctrl. Head

Marysville Fire: (2019 Ford E450) Paramedic Xport ID: 31

Mobile Installation Preview

- Existing Antenna Type/location: 1⁄2 wave Larsen 800 MHz antenna. Re-use existing antenna mount & line kit (new). New GPS antenna mount on rear module on forward roof directly above ceiling light.
- Charge Guard or equivalent, timer-based DC power disconnect? No.
- Vehicle Intercom radio interface? Yes. Firecom Model 210 unit.
- Vehicle Siren/PA unit to radio interface? No.
- Replace radio control head mounting faceplate? No. Already utilizes an 05 series control head.
- Transceiver, speaker, mike mounting locations reusable? Yes.
- DC power distribution re-usable? Yes. Note that the fuse bank is in front of the module ceiling area.
- Unique Notes:

Marysville Fire: (2019 Ford E450) Paramedic Xport ID: 31

Mobile Installation Preview

■ Marysville Fire: (Rosenbauer Commander)

Fire Engine ID: 46

Mobile Installation Preview

• Existing Radio: MCS2000/XTL2500 Remote Mt. + Dual Ctrl. Heads

Marysville Fire: (Rosenbauer Commander) Fire Engine ID: 46

Mobile Installation Preview

- Existing Antenna Type/location: 1⁄2 wave loaded 800 MHz antenna right front rooftop behind light bar. Re-use existing antenna mounting hole. New GPS antenna to be mounted to an 'L' bracket with 3⁄4" hole at top of light frame at rear-right.
- Charge Guard or equivalent, timer-based DC power disconnect? No.
- Vehicle Intercom radio interface? Yes. Firecom Model 5000R system.
- Vehicle Siren/PA unit to radio interface? See Global Install Notes 13.
- Replace radio control head mounting faceplate? Yes. See Global Installation Notes 11.
- Transceiver, speaker, mike mounting locations reusable? Yes
- DC power distribution re-usable? Yes. Located in the glove compartment, right side & console top center panel.
- Unique Notes: Rear control head in pump panel on exterior, will need long control head cable.

Marysville Fire: (Rosenbauer Commander) Fire Engine ID: 46

Mobile Installation Preview

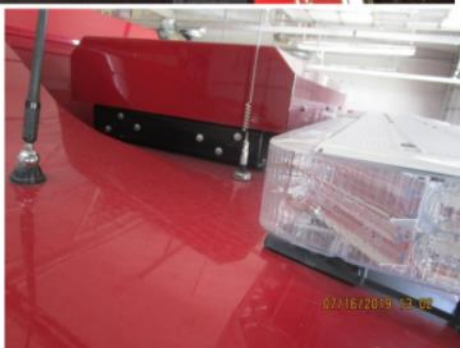

○ **Miscellaneous Technical Notes 1**

Miscellaneous Technical Notes 1

- Standard motorcycle APX control head and radio accessory interface connectorized cables:

  a. Accessory connector kit (HLN7026B) comes with extra Molex male pins, but doesn't contain two female pins for tapping 12VDC from the 4 pin Molex connector if the mobile radio must power an external radio-audio interface device.

Motorcycle control head cable kit

HLN7026B motorcycle radio accessory kit

○ **Miscellaneous Technical Notes 2**

Miscellaneous Technical Notes 2

- <u>Radio-audio Headset Interface pin-outs and connectorization data:</u>

  <u>David Clark Co.:</u> 360 Franklin St., Worcester, MA 01604; 800-298-6235.

  David Clark Radio interface model: U3815 [Series 3800]

  David Clark Interface cable part# C3821 (6 bare/tinned wires at radio end)

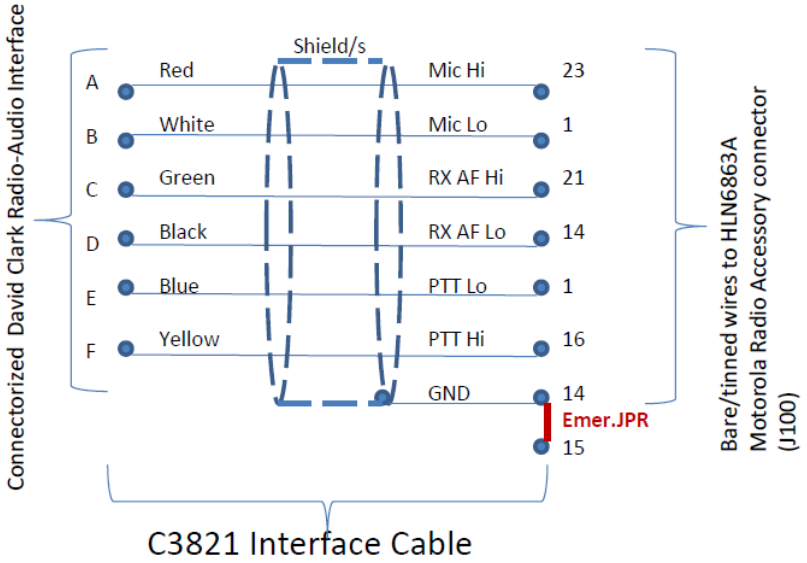

Note: Radio receive audio to David Clark unit is based upon fixed low level audio from Pin 21 (RX AF Hi) and ground common from Pin 14 (RX AF Lo), <u>not</u> from speaker audio.

○ **Miscellaneous Technical Notes 3**

Miscellaneous Technical Notes 3

- <u>Radio-audio Headset Interface pin-outs and connectorization data:</u>

  <u>Setcom Corp.:</u> 3019 Alvin DeVane Blvd., suite 560, Austin, TX. 78741; 650-965-8020.
  Setcom MOBILE Radio intercom interface model: IM900.
  Setcom MOBILE radio Interface cable part# 9RC-18MU4-3
  (4 bare tinned wires at radio end)

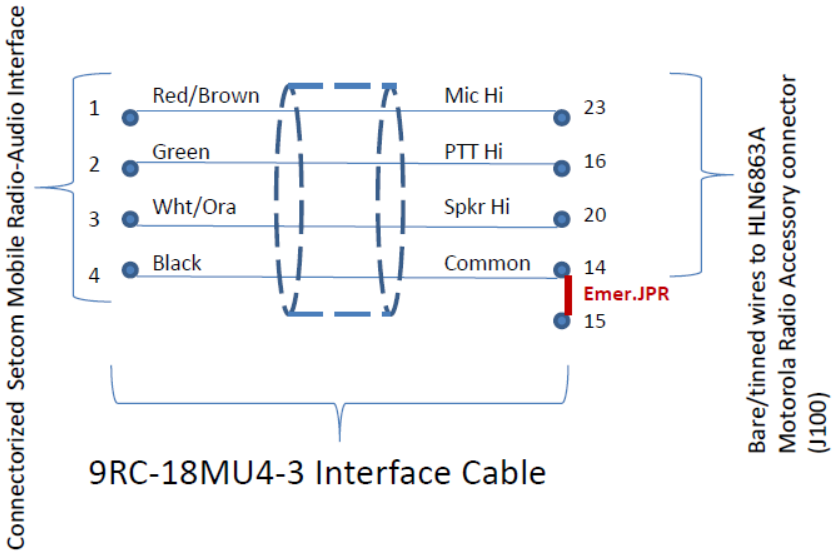

Miscellaneous Technical Notes 3

- <u>Radio-audio Headset Interface pin-outs and connectorization data:</u>
  <u>Setcom Corp.:</u> 3019 Alvin DeVane Blvd., suite 560, Austin, TX. 78741; 650-965-8020.
  Setcom MOBILE Radio intercom interface model: IM900.
  Setcom MOBILE radio Interface cable part# 9RC-18MU4-3
  (4 bare tinned wires at radio end)

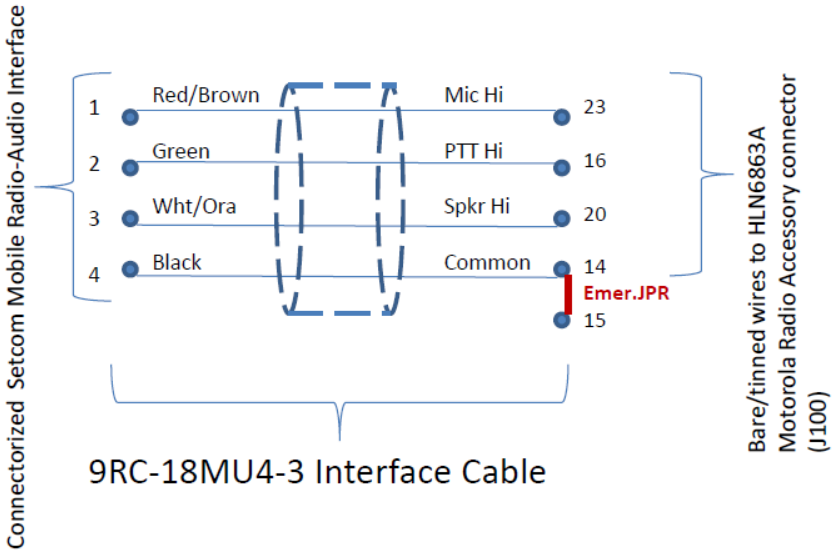

○ **Miscellaneous Technical Notes 4**

Miscellaneous Technical Notes 4

Radio-audio Headset Interface pin-outs and connectorization data:

Setcom Corp.: 3019 Alvin DeVane Blvd., suite 560, Austin, TX. 78741; 650-965-8020.

Setcom MOTORCYCLE Radio intercom interface model: MC-83 Series

Setcom Harley Davidson MOTORCYCLE radio Interface cable kit part# MCH-71MU

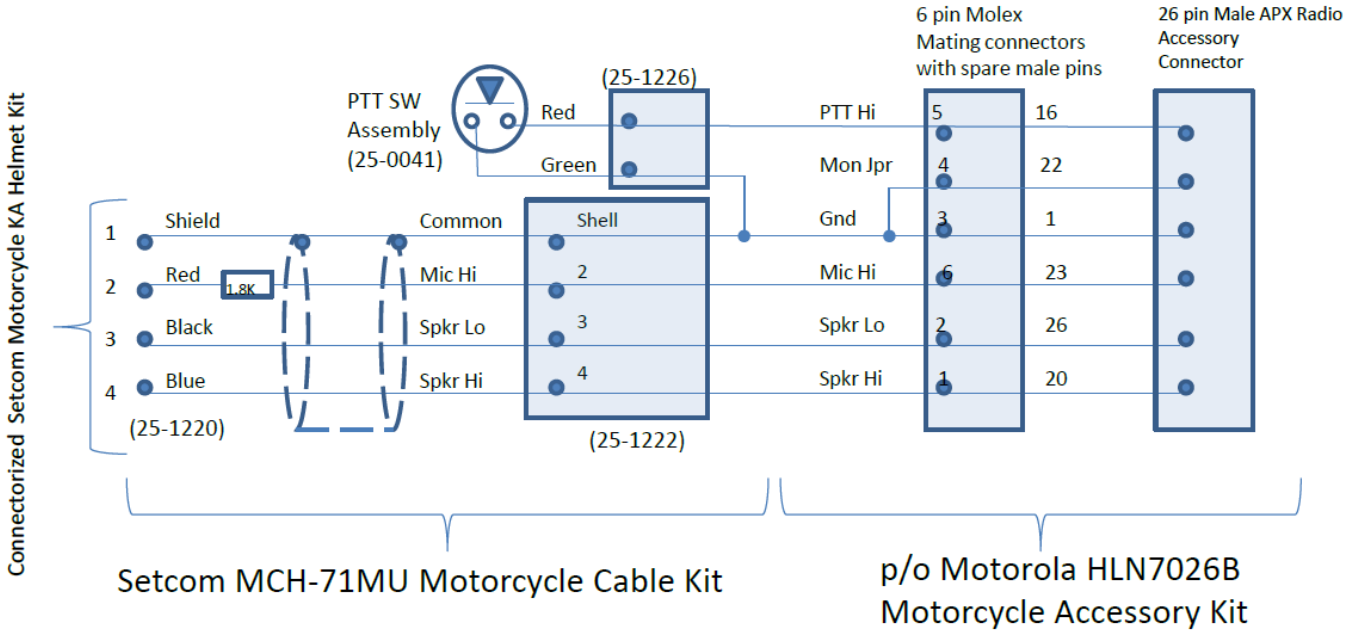

- **Miscellaneous Technical Notes 5**

Miscellaneous Technical Notes 5

Radio-audio Headset interface pin-outs and connectorization data:
Setcom MOTORCYCLE Radio intercom interface model: MWB12 Series

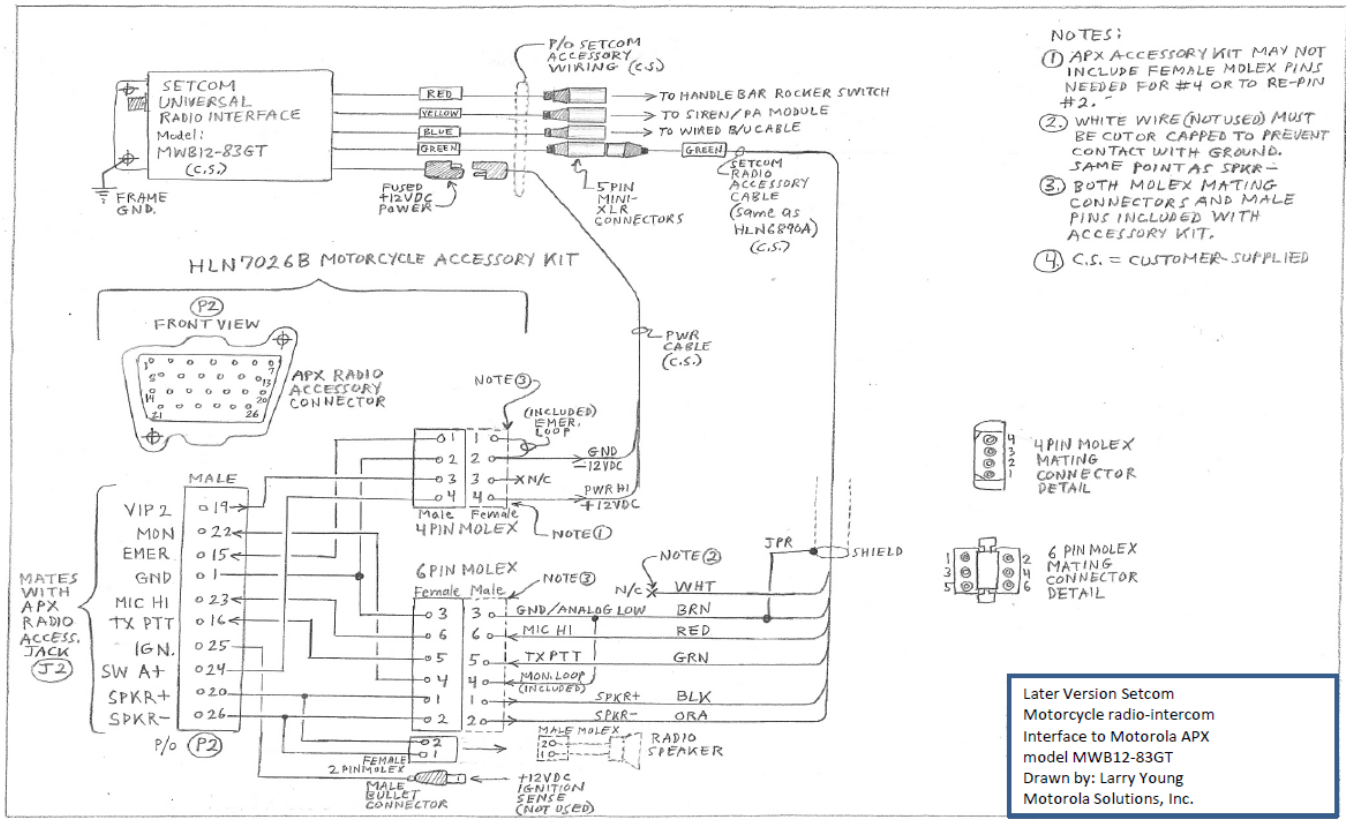

○ **Miscellaneous Technical Notes 6**

Miscellaneous Technical Notes 6

- <u>Radio-audio Headset Interface pin-outs & connectorization data:</u>

  <u>Sigtronics Corp.:</u> 178 E. Arrow Hwy, San Dimas, CA. 91773; 909-305-9399.

  Sigtronics Mobile radio interface model: "Ultrasound".

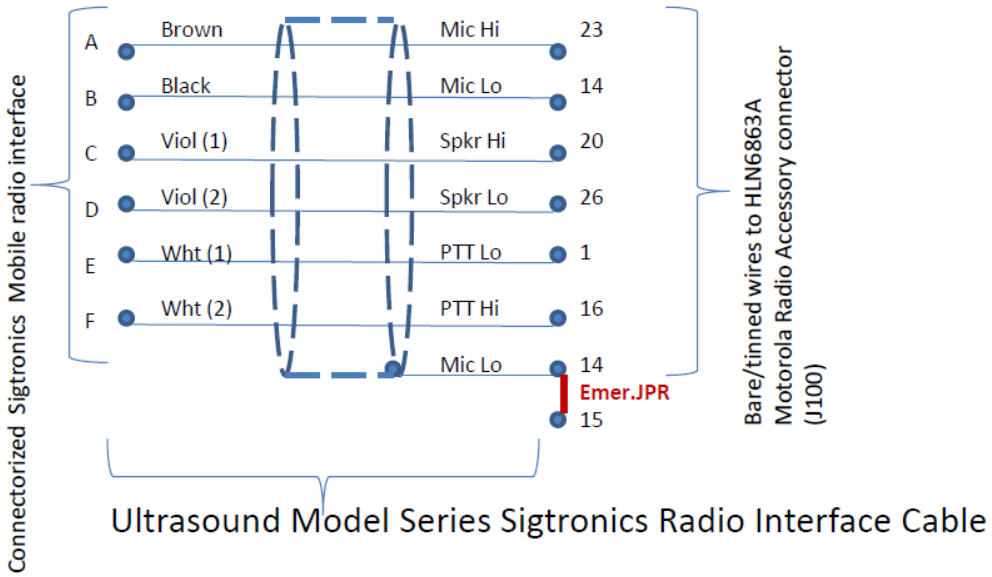

○ **Miscellaneous Technical Notes 7**

Miscellaneous Technical Notes 7

- <u>Radio-audio Interface pin-outs and connectorization data:</u>

  <u>Unitrol by Federal Signal Corp.</u>: 2645 Federal Signal Dr., University Park, IL. 60484; 800-264-3578.
  Model: "Smart Siren" SS2000SM.

Note 1: Customer to supply Federal Microphones for all PA units. Motorola APX Radio speaker audio is the only connection to "Smart Siren" interfaces.

Note 2: All Federal ULM 10 microphone adapters are to be removed, since APX radio and Smart Siren PA microphones will now be separate hardware.

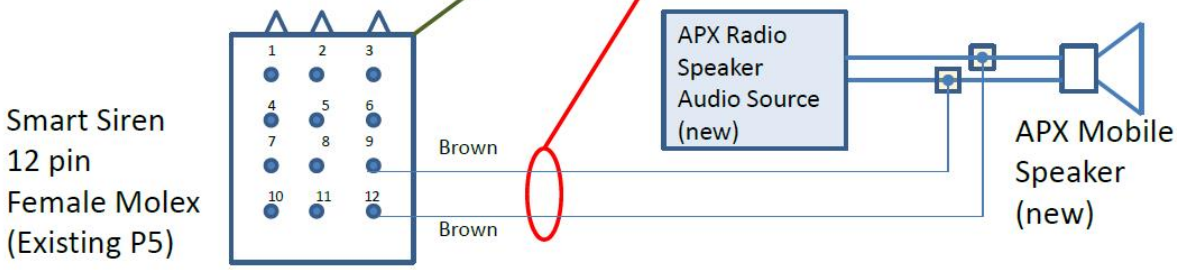

○ **Miscellaneous Technical Notes 8**

Miscellaneous Technical Notes 8

- Radio-audio Interface pin-outs and connectorization data:

  Whelen Communications, Inc.: 51 Winthrop Rd., Chester, CT 06412; 860-526-9504

  Typical Whelen Siren/PA Control systems: CANtrol models:

○ **Miscellaneous Technical Notes 9**

Miscellaneous Technical Notes 9

Radio-audio Interface pin-outs and connectorization data:

APX Radio Receiver Audio Interface to Whelen CANtrol Siren/PA system

Note: Customer to supply PA Microphones for all units. Motorola APX Radio speaker audio is the only connection to CANtrol interfaces.

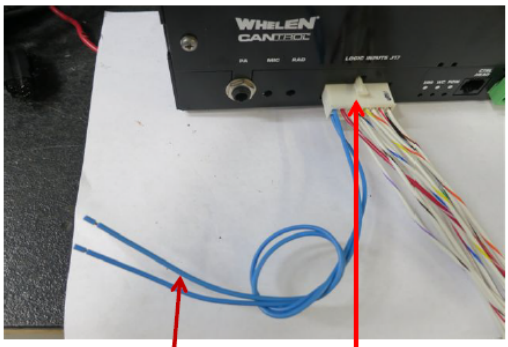

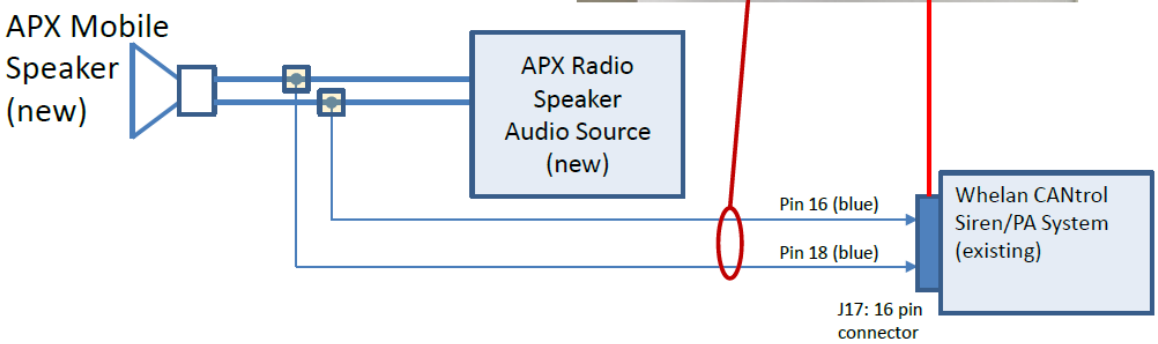

○ **Miscellaneous Technical Notes 10**

Miscellaneous Technical Notes 10

Radio-audio Interface pin-outs and connectorization data:

Firecom Communication Systems and Headsets for Firefighters and EMS:
7340 SW Durham Rd., Portland, OR. 97224 Phone: 800-527-0555
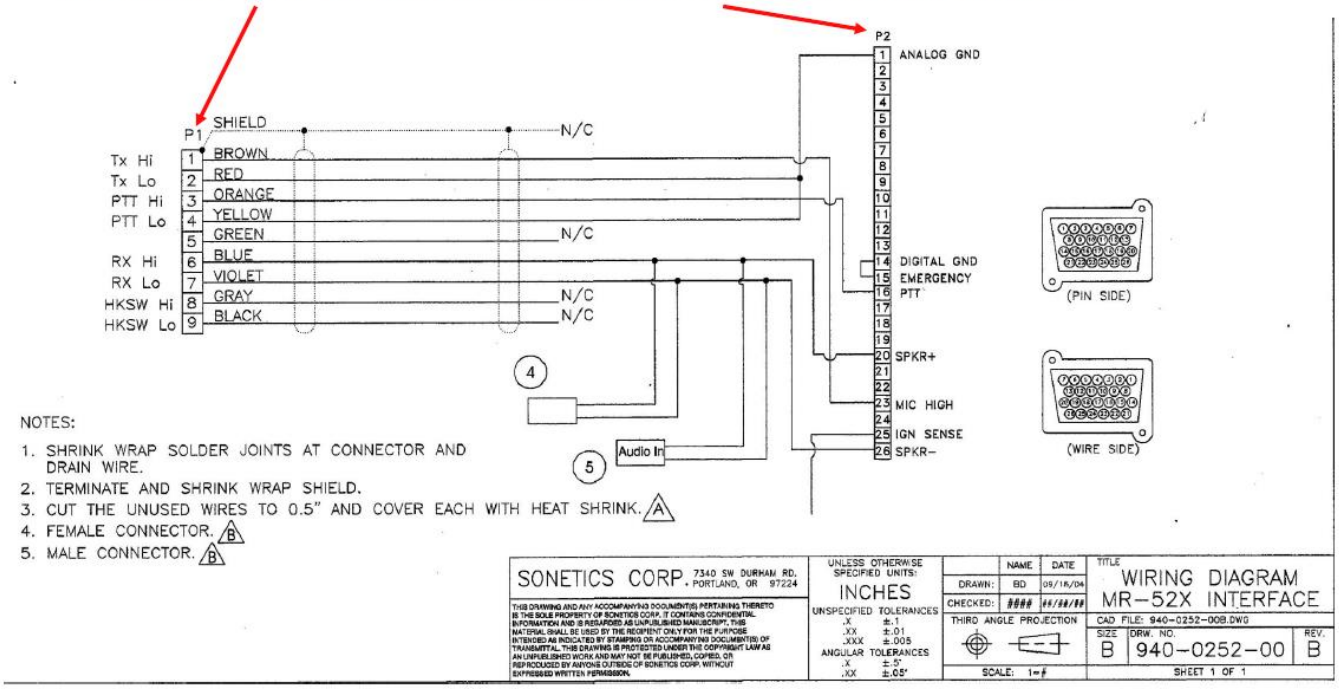
Firecom model 3000C series intercom to APX mobile radio: Using Firecom MR-52X cable