REQUEST FOR QUOTE (RFQ) – June 3, 2019

NOTICE: Sierra County Department of Public Works hereby gives notice that in accordance with Public Contract Code 22000-22045 it will accept quotes for the following public work:

Loyalton Transfer Station Concrete Pad Construction

QUOTE SUBMISSION: Quotes will be received via mail at the Sierra County Public Works Office, P.O. Box 98, Downieville, CA 95936, by email to transportation@sierracounty.ca.gov, or they can be delivered to 101 Courthouse Square, Downieville, CA **until purchase order is issued to a Contractor.**

DESCRIPTION AND LOCATION OF THE WORK

Location: Loyalton Transfer Station, #1 Garbage Pit Road.

Scope of Work: Sierra County Public Works is soliciting quotes for the provision of all equipment, materials and labor necessary for construction of a 9" concrete Slab-on-Grade, Pad Area, in accordance with the project plans.

All provisions contained within the project plan shall be fully considered with the quote provided by contractor.

CONTRACTOR REQUIREMENTS: The following requirements apply to all contractors for all public works projects in Sierra County. All contractors must:

1. Have a current, valid California class A contractor license or other applicable specialty license, under the name for which the proposal is submitted.
2. If contract award is greater than $15,000 the contractor shall meet the following requirements:

1. Be registered with the Department of Industrial Relations. See http://www.dir.ca.gov/public-works/publicworks.html for more information. This requirement also applies to all subcontractors doing work on this project.
2. Provide the following information with the quote:
    a. Your DIR registration number.
    b. A list of all planned subcontractors, with name of company, project contact, business address/phone number, California contractor license number, DIR number, and total dollar amount of subcontract.
    c. A written acknowledgement that all addenda (if applicable) have been reviewed and incorporated into the quote.

LEGAL REQUIREMENTS: The County of Sierra, in accordance with Title VI of the Civil Rights Act of 1964 (78 Stat. 252) and the regulations of the Department of Commerce (15 C.F.R., Part 8), issued pursuant to such Act, hereby notifies all bidders that it will affirmatively ensure that in any contract entered into pursuant to this advertisement, minority business enterprises will be afforded full opportunity to submit quotes in response to this invitation and will not be discriminated against on the grounds of race, color, or national origin in consideration for an award.

This is a public works project. Pursuant to Sections 1770 and 1773 of the Labor Code of the State of California, the County of Sierra has ascertained the general prevailing rate of wages applicable to the work to be done. These rates are set forth in a schedule which is on file and available in the office of the Department of Public Works, County of Sierra. Contractor shall not pay less than the prevailing rate of wages. No quote will be considered unless it is made in accordance with the provisions of the proposal requirements and conditions set forth in the contract documents.

A contractor or subcontractor shall not be qualified to quote on, be listed in a quote proposal, subject to the requirements of Section 4104 of the Public Contract Code, or engage in the performance of any contract for public work, as defined in this chapter, unless currently registered and qualified to perform public work pursuant to Section 1725.5. It is not a violation of this section for an unregistered contractor to submit a quote that is authorized by Section 7029.1 of the Business and Professions Code or by Section 10164 or 20103.5 of the Public Contract Code, provided the contractor is registered to perform public work pursuant to Section 1725.5 at the time the contract is awarded.

QUALIFICATIONS OF BIDDERS: Each bidder must be prepared to submit, within five days of County's request, written evidence of bidder's qualifications to perform the work. Bidders may be required to submit evidence that they have a practical knowledge of the particular work quote upon, and that they have the financial resources to complete the proposed work. In determining the bidder's qualifications, the following factors will be considered: work previously completed by the bidder and whether the bidder (a) maintains a permanent place of business, (b) has adequate plant and equipment to do the work properly and expeditiously, (c) has the financial resources to meet all obligations incident to the work, and (d) has appropriate technical experience. Each bidder may be required to show that he or she has handled former work so that no just claims are pending against such work. No quote will be accepted from a bidder who is engaged on any work that would impair his or her ability to perform or finance this work.

Each bidder must hold a current valid General Class A contractor's license or other applicable specialty license and shall type or write in a legible manner his or her California Contractor's license number on the outside of the envelope or wrapper which contains the quote and in the space provided on the quote form.

RESERVATION OF RIGHTS: Sierra County specifically reserves the right, in its sole discretion, to reject any or all quotes, or re-quote, or to waive inconsequential deviations from

quote requirements not involving time, price, or quality of the work. Sierra County reserves the right to reject any or all quotes.

CONTACT INFORMATION:
Owner: Sierra County
Project Manager: Bryan Davey
Phone: 530-289-3201
Email: bdavey@sierracounty.ca.gov

PROCUREMENT OF RFQ DOCUMENTS: Contractors may examine and obtain Request for Quotes from the County Quotes & RFP webpage: http://www.sierracounty.ca.gov/bids.aspx

INSPECTION OF SITE OF WORK: Contractors are required to inspect the site of the work in order to satisfy themselves, by personal examination or by such other means as they may prefer, of the location of the proposed work and as to the actual conditions of and at the site of work. If, during the course of the examination, contractor finds facts or conditions which appear confusing to contractor, contractor shall apply to County for additional information and explanation before submitting the quote. However, no such supplemental information so requested or furnished shall vary the terms of the specifications or the Contractor's sole responsibility to satisfy himself or herself as to the conditions of the work to be performed.

The submission of a quote by the contractor shall constitute the acknowledgment that, if awarded the work, contractor has relied and is relying on contractor's examination of (a) the site of the work, (b) the access to the site, and (c) all other data, matters, and things requisite to the fulfillment of the work and on contractor's own knowledge of existing conditions on and in the vicinity of the site of the work to be constructed under the purchase order, and not on any representation or warranty of County. No claim for additional compensation will be allowed which is based upon a lack of knowledge of the above items.

Where plans and specifications contain drawings of physical conditions in or relating to existing surface conditions, including underground facilities, which are at or contiguous to the site, contractor may rely upon the accuracy of the data contained in such drawings but not upon the completeness thereof for the purposes of bidding or construction. If a mass diagram has been prepared for a project, it is for design purposes only. If it is made available to contractors, County assumes no responsibility whatsoever for the information contained therein and makes no guarantees with respect to reliance thereon.

Before submitting a quote, each contractor will, at contractor's own expense, make or obtain any additional examinations, investigations, explorations, tests and studies and obtain any additional information and data which pertain to the physical conditions (surface, subsurface and underground facilities) at or contiguous to the site or otherwise which may affect cost, progress, performance or furnishing of the work and which contractor deems necessary to determine its quote for performing and furnishing the work in accordance with the time, price and other terms and conditions of the purchase order.

On request in advance, County will provide each contractor access to the site to conduct such explorations and tests as each contractor deems necessary for submission of a quote. Contractor

shall fill all holes, clean up and restore the site to its former condition upon completion of such explorations.

The lands upon which the work is to be performed, rights of way and easements for access thereto and other lands designated for use by Contractor in performing the work are identified in the contract documents. All additional lands and access thereto required for temporary construction facilities or storage of materials and equipment are to be provided by Contractor.

Easements for permanent structures or permanent changes in existing structures are to be obtained and paid for by County unless otherwise provided in the contract documents.

QUOTE PREPARATION COST: Contractors are solely responsible for the cost of preparing their quotes.

QUOTES

Quotes shall be made on the blank forms prepared by County and included herein. Bidders may extract these pages from the request for quotes or submit the entire book. All quotes shall give prices, both in writing and in figures, and shall be signed by the bidder or bidder's authorized representative with bidder's address. If the quote is made by an individual, his or her name, signature and post office address must be shown; if made by a firm or partnership, the name and post office address of the firm or partnership and the signature of at least one of the general partners must be shown; if made by a corporation, the quote shall show the name of the state under the laws of which the corporation is chartered, the name and post office address of the corporation, and the title of the person who signs on behalf of the corporation.

QUOTE PRICE

The quote price shall include everything necessary for the completion of construction and fulfillment of the work including, but not limited to, furnishing all materials, equipment, tools, plant and other facilities and all management, superintendence, labor and services, except as may be provided otherwise in the request for quotes.

In the event of a difference between the price quoted in words and a price quoted in figures for the same quotation, the words shall be considered the amount quote. Discrepancies between the indicated sum or total of figures and the correct sum or total will be resolved in favor of the correct sum or total.

BASIS OF QUOTES

The bidder shall submit quote item prices as shown on the quote form. Failure to comply may be cause for rejection. The County will determine the lowest quote based on the combination of chosen items for construction. County may consider any combination of the proposed items for construction.

In accordance with the provision of Section 6707 of the State Labor Code, each bidder shall list, in any quote item calling for trenching of 5 feet or more in depth, the amount contained in the

proposal for adequate trench and excavation sheeting, shoring, and bracing or equivalent method for the protection of life and limb which shall conform to applicable Safety Orders.

TAXES

Quote prices shall include allowance for all federal, state and local taxes.

CONTRACT TIME

The date by which the work is to be completed (the contract time) is set forth in the purchase order.

SUBSTITUTE MATERIALS AND EQUIPMENT

The purchase order, if awarded, will be on the basis of material and equipment described in the drawings or specified in the specifications without consideration of possible substitute or "co equal" items. Whenever it is indicated in the drawings or specified in the specifications that a substitute or "co equal" item of material or equipment may be furnished or used by Contractor if acceptable to County, application for such acceptance will not be considered by County until after the effective date of the contract unless an addendum is issued to all bidders authorizing the use of a specified substitute. The procedure for submittal of any such application by Contractor and consideration by County is set forth in the contract documents.

LIST OF SUBCONTRACTORS

Each quote shall have listed on the form provided herewith the name and address of each subcontractor to whom the bidder proposes to sublet portions of the work in excess of one half of one percent of the total amount of the quote. For the purpose of this paragraph, a subcontractor is defined as one who contracts with the Contractor to furnish materials and labor, or labor only for the performance of work at the site of the work.

County has the right to review the suitability and qualifications of any subcontractor or supplier proposed by the Contractor. As part of this review County may request an experience statement with pertinent information as to similar projects and other evidence of qualification for each such subcontractor, person and organization. If County, after due investigation, has reasonable objection to any proposed subcontractor, County may, before giving the purchase order, request the apparent successful bidder to submit an acceptable substitute without an increase in quote price. If the apparent successful bidder does not make such substitution, the purchase order shall not be issued to such bidder. Any subcontractor, other person or organization so listed and to whom County does not make written objection prior to the giving of the purchase order will be deemed acceptable to County subject to revocation of such acceptance after the effective date of the purchase order.

No Contractor shall be required to employ any subcontractor, other person or organization against whom Contractor has reasonable objection.

The Contractor may not change any subcontractor listed on its quote without written approval from County after a determination that the requirements of Public Contracts Code Section 4107 have been met.

EQUIPMENT SUPPLIER LISTING

Each bidder shall list, on the form provided, the name of the manufacturers or suppliers who are to furnish the items of equipment and systems shown on the form. The equipment listed is the equipment which shall be provided. Substitutions will be permitted only if named equipment does not meet the specifications, the manufacturer is unable to meet the delivery requirements of the construction schedule, or by mutual agreement of County and Contractor.

Preliminary acceptance of equipment listed by manufacturer's name shall not in any way constitute waiver of the specifications covering such equipment; final acceptance will be based on full conformity with the specifications covering the equipment.

Failure to furnish all information requested may be cause for rejection of the quote.

OPENING OF QUOTES

Quotes will be opened upon receipt and held in confidence until time of award.

QUOTES TO REMAIN OPEN

All quotes shall remain open and subject to acceptance for a period of 30 days from the date of receiving, but County may, in County's discretion, release any quote a prior to that date.

AWARD OF PURCHASE ORDER

The award of the purchase order, if awarded, will be made to the lowest responsive, responsible bidder whose quote complies with all the requirements stated herein. Within 30 days after the time of receiving the quotes, County will act either to accept a proposal or to reject all proposals. The acceptance of a proposal will be evidenced by a purchase order, delivered in person or by email to the bidder whose proposal is accepted. No other act of County shall constitute acceptance of a quote.

County may consider the qualifications and experience of subcontractors and other persons and organizations (including those who are to furnish the principal items of material or equipment) proposed for those portions of the work as to which the identity of subcontractors and other persons and organizations must be submitted as provided herein. Operating costs, maintenance considerations, performance data and guarantees of materials and equipment may also be considered by County.

QUOTE FORM

(Sierra County Standard Form Quote Document)

QUOTE TO LOYALTON TRANSFER STATION – CONCRETE PAD CONSTRUCTION

NAME OF BIDDER _____

PRINTED NAME_____

BUSINESS P.O. BOX _____

CITY, STATE, ZIP _____

BUSINESS STREET ADDRESS _____

(Please include even if P.O. Box used)

CITY, STATE, ZIP _____

TELEPHONE NO: **AREA CODE ( )** _____

FAX NO: **AREA CODE ( )**

CONTRACTOR LICENSE NO. _____

CONTRACTOR DIR NO. _____

The work to be done and referred to herein is in Sierra County, State of California, and shall be constructed in accordance with the Plans, Specifications (including the payment of not less than the wages rates set forth therein) and the purchase order annexed hereto.

The work to be done is described in the Technical Specifications to the Bidding Documents, Specifications, and Request for Quote for the LOYALTON TRANSFER STATION – CONCRETE PAD CONSTRUCTION.

COUNTY OF SIERRA
Loyalton Transfer Station – Concrete Pad Addition Construction

QUOTE ITEMS

No.	Item	Unit	Quantity	Unit Price	Total Amount
1	Subbase Construction	L.S.	1		
2	Slab-on-grade Construction	L.S.	1		
				TOTAL	

TOTAL OF QUOTE (in figures):_____

TOTAL OF QUOTE (in words):_____

_____

Also enclosed herewith is the Subcontractor Listing.

Prices quote shall include overhead, profit and all applicable taxes.

By submission of this quote, each bidder certifies, and in the case of a joint quote each party thereto certifies as to its own organization, that this quote has been arrived at independently, without consultation, communication, or agreement as to any matter relating to this quote with any other bidder or with any competitor.

In accordance with Public Contract Code Section 10232 (Chapter 466, Stats. 1982) the Contractor hereby states under penalty of perjury that no more than one final unappealable finding of contempt of court by a federal court has been issued against the Contractor within the immediately preceding two year period because of the Contractor's failure to comply with an order of a federal court which orders the Contractor to comply with an order of the National Labor Relations Board. This statement constitutes a part of the quote, and signature on the signature portion of this quote shall constitute signature of this statement.

The names of all persons in the foregoing quote as principal are as follows:

_____ _____

_____ _____

_____ _____

Licensed in accordance with an act providing for the registration of contractors, License No.

_____.

_____

_____
Signature of Bidder

BUSINESS ADDRESS: _____

PLACE OF RESIDENCE: _____

DATED: _____

SUBCONTRACTOR LISTING

The following information is submitted which gives the name, business address, and portion of the work for each subcontractor that will be used for a portion of the work equal to or exceeding the amount specified in the Instructions to Bidders if the bidder is awarded to the contract. Additional numbered pages shall be attached to this page as required. Each page shall be headed "SUBCONTRACTOR LISTING" and signed.

Name & DIR #	Business Address	Description of Portion of Work to be Performed
_____	_____	_____
_____	_____	_____
_____	_____	_____
_____	_____	_____
_____	_____	_____
_____	_____	_____
_____	_____	_____
_____	_____	_____
_____	_____	_____
_____	_____	_____
_____	_____	_____

_____

Signature of Contractor

PART 4 - TECHNICAL SPECIFICATIONS

DIVISION 1 GENERAL REQUIREMENTS

01100 Summary
01220 Measurement and Payment
01330 Submittal Procedures

DIVISION 2 SITE CONSTRUCTION

02320 Backfill

DIVISION 3 CONCRETE

03300 Cast-in-Place Concrete

SECTION 01100

SUMMARY

PART 1 GENERAL

1.1 SECTION INCLUDES

A. Contract description.

B. Work by Owner.

C. Owner supplied products.

D. Contractor's use of site [and premises].

E. Specification Conventions.

1.2 CONTRACT DESCRIPTION

A. Work of the Project includes:

1. Concrete Pad Construction

1.3 WORK BY OWNER

A. None.

1.4 OWNER SUPPLIED PRODUCTS

A. None

1.5 CONTRACTOR'S USE OF SITE [AND PREMISES]

A. Contractor shall have use of premises for construction operations, including use of Project site, during construction period.

B. Contractor’s use of premises is limited by Owner’s continued operation of the transfer station. Construction requires coordination with County to allow operation of a portion of the site for transfer station operations.

C. Time Restrictions for Performing Work: 7:00 am to 7:00 pm

1.6 SPECIFICATION CONVENTIONS

A. These specifications are written in imperative mood and streamlined form. This imperative language is directed to the Contractor, unless specifically noted otherwise. The words “shall be” are included by inference where a colon (:) is used within sentences or phrases.

PART 2 PRODUCTS (Not Used)

PART 3 EXECUTION (Not Used)

END OF SECTION

SECTION 01220

MEASUREMENT AND PAYMENT

PART 1 GENERAL

1.1 SUBBASE CONSTRUCTION

A. Payment for this work will be made at the lump sum quote price, “Subbase Construction”. This work consists of placing and compacting base material to grade.

1.2 SLAB-ON-GRADE CONSTRUCTION

A. Payment for this work will be made at the lump sum quote price, “Slab-on-grade Construction”. This work consists of formwork construction, installation of rebar, accessories, and concrete placement, and finishing and curing of concrete.

PART 2 PRODUCTS (Not Used)

PART 3 EXECUTION (Not Used)

END OF SECTION

SECTION 01330

SUBMITTAL PROCEDURES

PART 1 GENERAL

1.1 SECTION INCLUDES

A. Submittal procedures.

B. Proposed products list.

1.2 SUBMITTAL PROCEDURES

A. Identify Project, Contractor, subcontractor and supplier; pertinent drawing and detail number, and specification section number, appropriate to submittal.

B. Schedule submittals to expedite Project, and deliver to Project Engineer. Coordinate submission of related items.

C. When revised for resubmission, identify changes made since previous submission.

1.3 PROPOSED PRODUCTS LIST

A. Within 7 days after date of Notice of Award, submit list of major products proposed for use, with name of manufacturer, trade name, and model number of each product. For products specified only by reference standards, give manufacturer, trade name, model or catalog designation, and reference standards.

B. Identify source of concrete and provide proposed concrete mix design and testing specifications.

PART 2 PRODUCTS (Not Used)

PART 3 EXECUTION (Not Used)

END OF SECTION

SECTION 02320

BACKFILL

PART 1 GENERAL

1.1 SUMMARY

A. Section Includes:
   1. Base fill under slabs-on-grade.

1.2 REFERENCES

B. American Society for Testing and Materials:
   1. ASTM D698 - Standard Test Method for Laboratory Compaction Characteristics of Soil Using Standard Effort (12,400 ft-lbf/ft3 (600 kN-m/m3)).
   2. ASTM D1557 - Standard Test Method for Laboratory Compaction Characteristics of Soil Using Modified Effort (6,000 ft-lbf/ft3 (2,700 kN-m/m3)).

1.3 SUBMITTALS

C. Section 01330 - Submittal Procedures: Requirements for submittals.

D. Materials Source: Submit name of imported fill materials suppliers.

PART 2 PRODUCTS

2.1 FILL MATERIALS

A. Subgrade Material: CALTRANS Structure Backfill, Standard Specifications, 2015.

B. Aggregate Base Material: CALTRANS Class II, Standard Specifications, 2015.

PART 3 EXECUTION

3.1 PREPARATION

A. Compact subgrade to density requirements for subsequent backfill materials.

3.2 BACKFILLING

A. Backfill areas to contours and elevations with unfrozen materials.

B. Place material in continuous layers as follows:

   1. Subgrade: Maximum 8 inches, 95% MDD

   2. Aggregate Base Fill: Maximum 6 inches compacted depth, 95% MDD.

C. Employ placement method that does not disturb or damage other work.

D. Maintain optimum moisture content of backfill materials to attain required compaction density.

E. Backfill against supported foundation walls.

3.3 TOLERANCES

A. Top Surface of Backfilling Under Slab Areas: Plus or minus 1 inch from required elevations.

3.4 FIELD QUALITY CONTROL

A. Testing: In accordance with ASTM D698/ASTM D1557.

B. When tests indicate Work does not meet specified requirements, remove Work, replace and retest.

C. Proof roll compacted fill surfaces under slabs-on-grade.

3.5 PROTECTION OF FINISHED WORK

A. Reshape and re-compact fills subjected to vehicular traffic.

3.6 SCHEDULE

A. Slab-On-Grade:
   1. Fill Type: CALTRANS Class II Aggregate Base, 6 inches thick, compacted to 95 percent.

END OF SECTION

SECTION 03300

CAST-IN-PLACE CONCRETE

PART 1 GENERAL

1.1 SUMMARY

A. This Section specifies cast-in place concrete, including formwork, reinforcement, concrete materials, mixture design, placement procedures, accessories, joint devices, joint sealers, electrical items for casting into concrete, and finishes.

B. Related Sections include the following:

1. Division 2, Section 02320 “Backfill” for fill and base material under slab-on-grade.

1.2 REFERENCES

A. American Concrete Institute:
1. ACI 301 - Specifications for Structural Concrete.
2. ACI 305 - Hot Weather Concreting.
3. ACI 306.1 - Standard Specification for Cold Weather Concreting.
4. ACI 318 - Building Code Requirements for Structural Concrete.

B. American Society for Testing and Materials:
1. ASTM C33 - Standard Specification for Concrete Aggregates.
2. ASTM C94 - Standard Specification for Ready-Mixed Concrete.
3. ASTM C150 - Standard Specification for Portland Cement.
4. ASTM C260 - Standard Specification for Air-Entraining Admixtures for Concrete.
5. ASTM C494 - Standard Specification for Chemical Admixtures for Concrete.
6. ASTM C618 - Standard Specification for Coal Fly Ash and Raw or Calcined Natural Pozzolan for Use as a Mineral Admixture in Portland Cement Concrete.
7. ASTM C1017 - Standard Specification for Chemical Admixtures for Use in Producing Flowing Concrete.
8. ASTM C1107 - Standard Specification for Packaged Dry, Hydraulic-Cement Grout (Nonshrink).
9. ASTM C1116 - Standard Specification for Fiber-Reinforced Concrete and Shotcrete.
10. ASTM D994 - Standard Specification for Preformed Expansion Joint Filler for Concrete (Bituminous Type).
11. ASTM D1751 - Standard Specification for Preformed Expansion Joint Filler for Concrete Paving and Structural Construction (Nonextruding and Resilient Bituminous Types).
12. ASTM D1752 - Standard Specification for Preformed Sponge Rubber and Cork Expansion Joint Fillers for Concrete Paving and Structural Construction.
13. ASTM E1643 - Standard Practice for Installation of Water Vapor Retarders Used in Contact with Earth or Granular Fill under Concrete Slabs.

14. ASTM E1745 - Standard Specification for Plastic Water Vapor Retarders Used in Contact with Soil or Granular Fill under Concrete Slabs.

1.3 SUBMITTALS

A. Submit field or laboratory test records used to document that proposed mixture will achieve the required average compressive strength and other specified requirements in section 2.3 for each class of concrete. Field test records must be from concrete supplied from the same production facilities proposed for the work. Test data shall be from concrete mixtures containing similar materials proposed for the work.

B. Design Data:
1. Submit concrete mix design for each concrete strength.
2. Identify mix ingredients and proportions, including admixtures.

1.4 QUALITY ASSURANCE

A. Perform Work in accordance with ACI 301.

B. Conform to ACI 305 when concreting during hot weather.

C. Conform to ACI 306.1 when concreting during cold weather.

PART 2 PRODUCTS

2.1 CONCRETE MATERIALS

A. Cementitious Materials: use materials meeting the following requirements:
1. Hydraulic Cement: ASTM C 150 or ASTM C 1157 or ASTM C 595
2. Fly Ash: ASTM C 618
3. Slag: ASTM C 989

B. Silica Fume: ASTM C 1240
Normalweight Aggregate: ASTM C 33Water: Clean and not detrimental to concrete.

C. Water: ASTM C 1602

2.2 ADMIXTURES

A. Air Entraining: ASTM C 260

B. Water reducers, accelerating and retarding: ASTM C 494

C. Admixtures for flowing concrete: ASTM C 1017

D. Admixtures with no standard designation shall be used only with the permission of the design professional when its use for specific properties is required.

E. Plasticizing: ASTM C1017.

2.3 CONCRETE MIX

A. Mix concrete in accordance with ACI 301. Deliver concrete in accordance with ASTM C94.

B. Provide concrete to the following criteria:

Unit	Measurement
Compressive Strength (28 day)	4,000 psi
Water/Cement Ratio (maximum)	0.45 by weight (mass)
Aggregate Size (maximum)	¾ inch
Air Entrained	5 percent
Admixture	No Calcium Chloride Admixtures
Slump -	4 inches, plus or minus 1 inch.

C. Admixtures: Include admixture types and quantities indicated in concrete mix designs approved through submittal process.
   1. Use accelerating admixtures in cold weather. Use of admixtures will not relax cold weather placement requirements.
   2. Use set retarding admixtures during hot weather.

2.4 REINFORCING STEEL

A. Reinforcing bars must be deformed bars complying with ASTM A706/A706M, Grade 60. Before concrete is placed, the reinforcement to be embedded must be free of mortar, oil, dirt, excessive mill scale and scabby rust, and other coatings that would destroy or reduce the bond. No welding or heating of steel shall be permitted.

B. Tie Wire: Minimum 16 gage annealed type.

C. Chairs, Bolsters, Bar Supports, Spacers: Sized and shaped for strength and support of reinforcement during concrete placement conditions.

D. Place, support and secure reinforcement against displacement. Do not deviate from required position.

E. Minimum splice length shall be as shown on the plans. If minimum splice is not shown on the drawings, the following minimum(s) shall be applied:
   1. 45 diameters of the smaller bar spliced for reinforcing bars no. 8 or smaller
   2. 60 diameters of the smaller bar spliced for reinforcing bars nos. 9, 10, and 11

2.5 ACCESSORIES

A. Non-Shrink Grout: ASTM C1107.

2.6 JOINT DEVICES, FILLER MATERIALS, AND SEALANTS

A. ASTM D-1751, "Preformed Expansion Joint Fillers for Concrete Paving and Structural Construction (Nonextending and Resilient Bituminous Types)."

B. ASTM D-1752, "Preformed Sponge Rubber and Cork Expansion Joint Fillers for Concrete Paving and Structural Construction."

C. ASTM C 920, “Specification for Elastomeric Joint Sealants.”

2.7 FORMS

A. Forms shall be of wood, plywood, steel, or other approved material and shall be mortar tight. The forms and associated falsework shall be substantial and unyielding and shall be constructed so that the finished concrete will conform to the specified dimensions and contours. Form surfaces shall be smooth and free from holes, dents, sags, or other irregularities. Forms shall be coated with a nonstaining form release agent before being set into place.

B. Metal ties or anchorages within the forms shall be equipped with cones, she-bolts or other devices that permit their removal to a depth of at least 1 inch without injury to the concrete. Ties designed to break off below the surface of the concrete shall not be used without cones.

C. Prior to placement of concrete, the forms and subgrade shall be free of chips, sawdust, debris, water, ice, snow, extraneous oil, mortar, or other harmful substances or coatings and the temperature of all surfaces to be in contact with the new concrete shall be not be less than 40 degrees Fahrenheit. Any oil on the reinforcing steel or other surfaces required to be bonded to the concrete shall be removed. Rock surfaces shall be cleaned by air-water cutting, wet sandblasting, or wire brush scrubbing, as necessary, and shall be wetted immediately before placement of concrete. The earth surface shall be firm and damp. Placement of concrete on mud, dried earth, or uncompacted fill or frozen subgrade is not permitted.

D. Items to be embedded in the concrete shall be positioned accurately and anchored firmly.

PART 3 EXECUTION

3.1 EXAMINATION

A. Verify requirements for concrete cover over reinforcement.

B. Verify anchors, seats, plates, reinforcement and other items to be cast into concrete are accurately placed, positioned securely, and will not interfere with placing concrete.

3.2 PREPARATION

A. Prepare previously placed concrete by cleaning with steel brush and applying bonding agent.

3.3 CONVEYING

A. Concrete shall be delivered to the site and discharged into the forms within l-1/2 hours after the introduction of the cement to the aggregates. In hot weather or under conditions

contributing to quick stiffening of the concrete, the time between the introduction of the cement to the aggregates and discharge shall not exceed 45 minutes.

B. The Engineer may allow a longer time, provided the setting time of the concrete is increased a corresponding amount by the addition of an approved set-retarding admixture. In any case, concrete shall be conveyed from the mixer to the forms as rapidly as practicable by methods that prevent segregation of the aggregates and assure no loss of mortar occurs.

3.4 PLACING CONCRETE

A. Place concrete in accordance with ACI 301.

B. Measure, batch, mix, deliver, and provide delivery ticket for each batch of concrete in accordance with ASTM C94.
   1. Do not add water to concrete during delivery or during placement.
   2. Water is permitted to be added to a batch of concrete at the project site before placement of the batch begins provided that the amount of water added does not exceed the allowed amount indicated on the delivery ticket.

C. Notify Engineer minimum 24 hours prior to commencement of operations.

D. Concrete shall not be placed until the subgrade, forms, steel reinforcement, and embedded items have been inspected and approved.

E. Ensure reinforcement, inserts, embedded parts, formed expansion and contraction joints, are not disturbed during concrete placement.

F. Separate slabs on grade from vertical surfaces with 1/2 inch thick joint filler.

G. Place slabs in pattern indicated.

H. Place joint filler in slab pattern placement sequence. Set top to required elevations. Secure to resist movement by wet concrete.

I. Extend joint filler from bottom of slab to within 1/2 inch of finished slab surface.

J. Install construction joint devices in coordination with slab pattern placement sequence. Set top to required elevations. Secure to resist movement by wet concrete.

K. Place concrete continuously between predetermined expansion, control, and construction joints.

L. Immediately after the concrete is placed in the forms, it shall be consolidated by spading, hand tamping, or vibration as necessary to ensure a smooth surface and dense concrete.

M. Screed slabs on grade level, maintaining surface flatness of maximum 1/4 inch in 10 ft.

3.5 CONSTRUCTION JOINTS

A. Construction joints shall be made at the locations shown on the drawings. If construction joints are needed that are not shown on the drawings, they shall be placed in locations approved by the Engineer.

B. Steel tying and form construction adjacent to concrete in place shall not be started until the concrete has cured at least 12 hours. Before new concrete is deposited on or against concrete that has hardened, the forms shall be retightened. New concrete shall not be placed until the hardened concrete has cured at least 12 hours.

C. The surface of construction joints shall be cleaned of all unsatisfactory concrete, laitance, coatings, or debris by washing and scrubbing with a wire brush or wire broom or by other means approved by the Engineer. The surface shall be kept moist for at least 1 hour before the new concrete is placed.

3.6 EXPANSION AND CONTRACTION JOINTS

A. Expansion and contraction joints shall be made only at locations shown on the drawings.

B. Exposed concrete edges at expansion and contraction joints shall be carefully tooled or chamfered, and the joints shall be free of mortar and concrete. Joint filler shall be left exposed for its full length with clean and true edges.

C. Preformed expansion joint filler shall be held firmly in the correct position as the concrete is placed.

3.7 CONCRETE FINISHING

A. Provide formed concrete surfaces to be left exposed with broom finish.

B. All exposed surfaces of the concrete shall be accurately screeded to grade.

C. Excessive floating or troweling of surfaces while the concrete is soft is not permitted.

D. Adding dry cement or water to the surface of the screeded concrete to expedite finishing is not allowed.

3.8 CURING AND PROTECTION

A. Immediately after placement, protect concrete from premature drying, excessively hot or cold temperatures, and mechanical injury.

B. Maintain concrete with minimal moisture loss at relatively constant temperature for period necessary for hydration of cement and hardening of concrete.

C. Cure floor surfaces in accordance with ACI 301.

D. Concrete shall be prevented from drying for a curing period of at least 7 days after it is placed. Exposed surfaces shall be kept continuously moist for the entire period, or until curing compound is applied as specified below. Moisture shall be maintained by sprinkling, flooding, or fog spraying, or by covering with continuously moistened canvas,

cloth mats, straw, sand, or other approved material. Wood forms left in place during the curing period shall be kept continuously wet. A formed surface shall be thoroughly wetted immediately after forms are removed and shall be kept wet until patching and repairs are completed. Water or covering shall be applied in such a way that the concrete surface is not eroded or otherwise damaged.

E. Concrete, except at construction joints, may be coated with the approved curing compound instead of continued application of moisture. The compound shall be sprayed on the moist concrete surface as soon as free water has disappeared, but shall not be applied to any surface until patching, repairs, and finishing of that surface are completed. The compound shall be applied at a uniform rate of not less than 1 gallon per 175 square feet of surface and shall form a continuous adherent membrane over the entire surface. Curing compound shall be thoroughly mixed before applying and continuously agitated during application. Curing compound shall not be applied to a surface requiring bond to subsequently placed concrete, such as construction joints, shear plates, reinforcing steel, and other embedded items. If the membrane is damaged during the curing period, the damaged area shall be resprayed at the rate of application specified above. Any surface covered by the membrane shall not be trafficked unless protected from wear.

3.9 CONCRETING IN COLD WEATHER

A. Concrete shall not be mixed nor placed when the daily minimum atmospheric temperature is less than 40 degrees Fahrenheit unless facilities are provided to prevent the concrete from freezing. The use of accelerators or antifreeze compounds is not allowed.

3.10 CONCRETING IN HOT WEATHER

A. The contractor shall apply effective means to maintain the temperature of the concrete below 90 degrees Fahrenheit during mixing, conveying, and placing.

3.11 FIELD QUALITY CONTROL

A. Contractor shall provide for the following testing of concrete to ensure conformance with specified requirements and provide the results of testing to County:

1. Three concrete test cylinders will be taken for every of each class of concrete placed for compressive strength tests. Samples for concrete tests shall be taken in accordance with ASTM C 172 and two cylinders tested in accordance with ASTM C 39.
2. Acceptance of concrete shall be based on strength test results of standard cured cylinders in accordance with ASTM C 31 and tested at 28 days in accordance with ASTM C 39. Strength test results are the average of two specimens.
3. One slump test will be taken for each set of test cylinders taken. ASTM C 143.
4. One air content test will be made for each set of test cylinders taken. ASTM C 231.
5. One temperature test will be made for each set of test cylinders taken. ASTM C 1064.
6. Maintain records of concrete placement. Record date, location, quantity, air temperature and test samples taken.

3.12 PATCHING

A. Allow Engineer to inspect concrete surfaces immediately upon removal of forms.

B. Excessive honeycomb or embedded debris in concrete is not acceptable. Notify Engineer upon discovery.

C. Patch imperfections in accordance with ACI 301.

3.13 DEFECTIVE CONCRETE

A. Defective Concrete: Concrete not conforming to required lines, details, dimensions, tolerances or specified requirements.

B. Repair or replacement of defective concrete will be determined by Engineer.

C. Do not patch, fill, touch-up, repair, or replace exposed concrete except upon express direction of Engineer for each individual area.

PART 4

END OF SECTION

PART 5 – PROJECT DRAWINGS

Plan Sheet 1	Title Sheet
Plan Sheet 2	Site Plan
Plan Sheet 3	Site/Slab Layout

REDUCED SCALE FROM FULL–SIZE AT 2.2:1

LOYALTON TRANSFER STATION
CONCRETE PAD CONSTRUCTION - ADDITION

LOYALTON LANDFILL
SIERRA COUNTY, CALIFORNIA

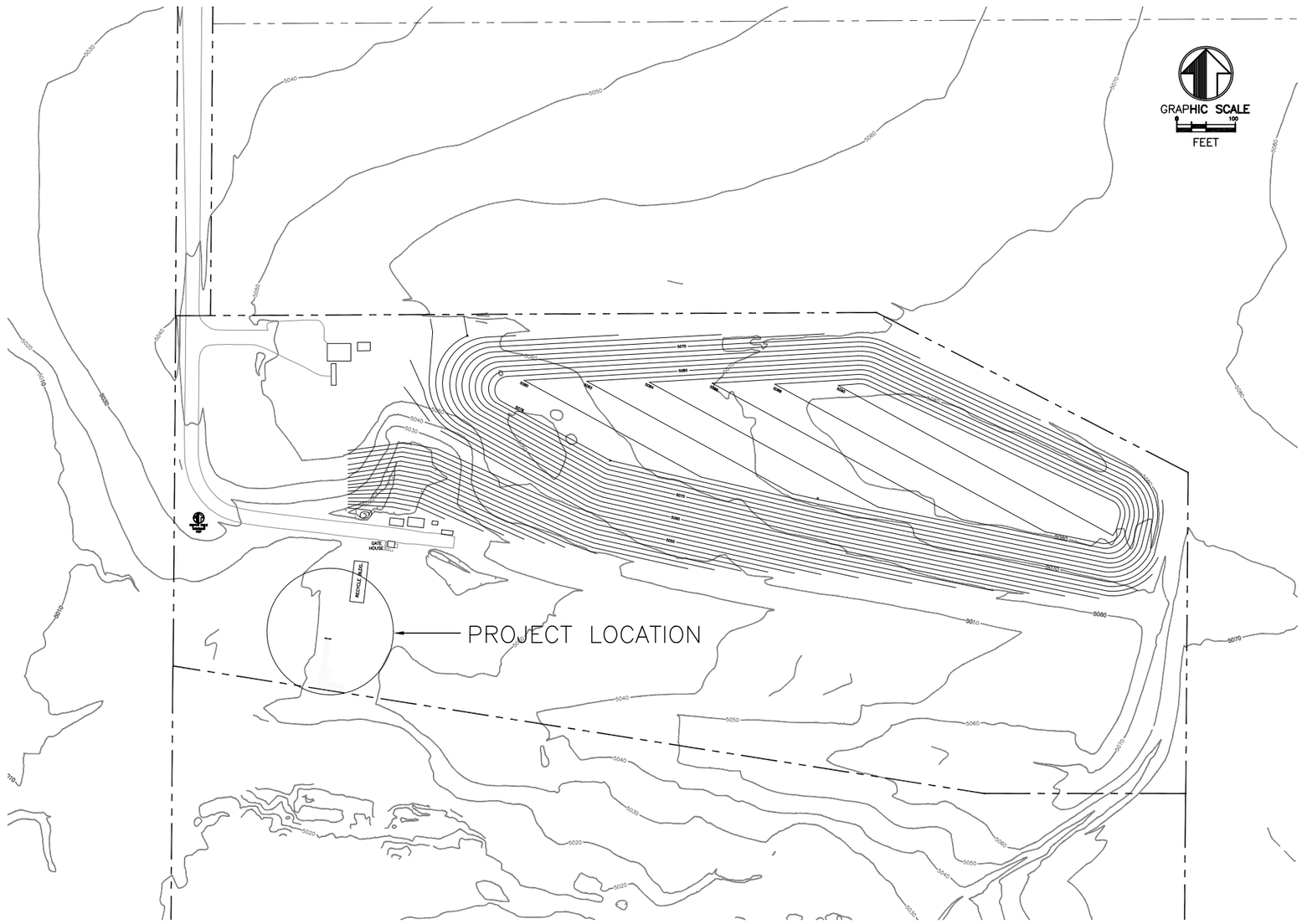

LOCATION MAP

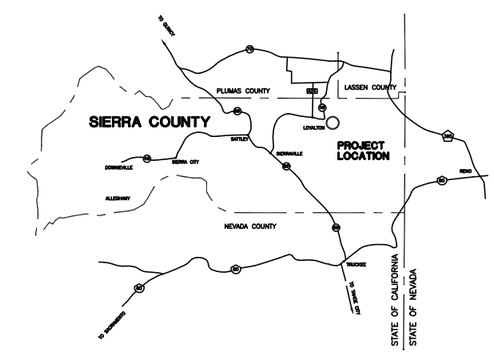

LEGEND

Ø	–	DIAMETER
DIA	–	DIAMETER
EX.	–	EXISTING
FT.	–	FEET
GRC	–	GALVANIZED RIGID CONDUIT
IN.	–	INCHES
MAX.	–	MAXIMUM
MDD	–	MAXIMUM DRY DENSITY
MIN.	–	MINIMUM
OC	–	ON CENTER
100.0'		FINAL GRADE ELEVATION
1/4		DETAIL DESIGNATION PLAN SHEET PAGE

DRAWING INDEX

DRAWING NAME

1 – TITLE SHEET
2 – SITE PLAN
3 – SITE/SLAB LAYOUT

RELEASES/REVISIONS

No.	Date	Description	By
0	5/23/19	Initial Release	CWM

AVALEX INC.
Civil Engineering and Environmental Services
P.O. Box 550218, South Lake Tahoe, CA 96155
Phone (530) 543-3200 www.avalex.info

TITLE SHEET
LOYALTON TRANSFER STATION
SIERRA COUNTY DEPARTMENT OF PUBLIC WORKS
LOYALTON, CALIFORNIA

Date: May 23, 2019
Designed By: CWM
Drawn By: CWM
File:ConcretePad.dwg
Project No.: 97–005

REDUCED SCALE FROM FULL-SIZE AT 2.2:1

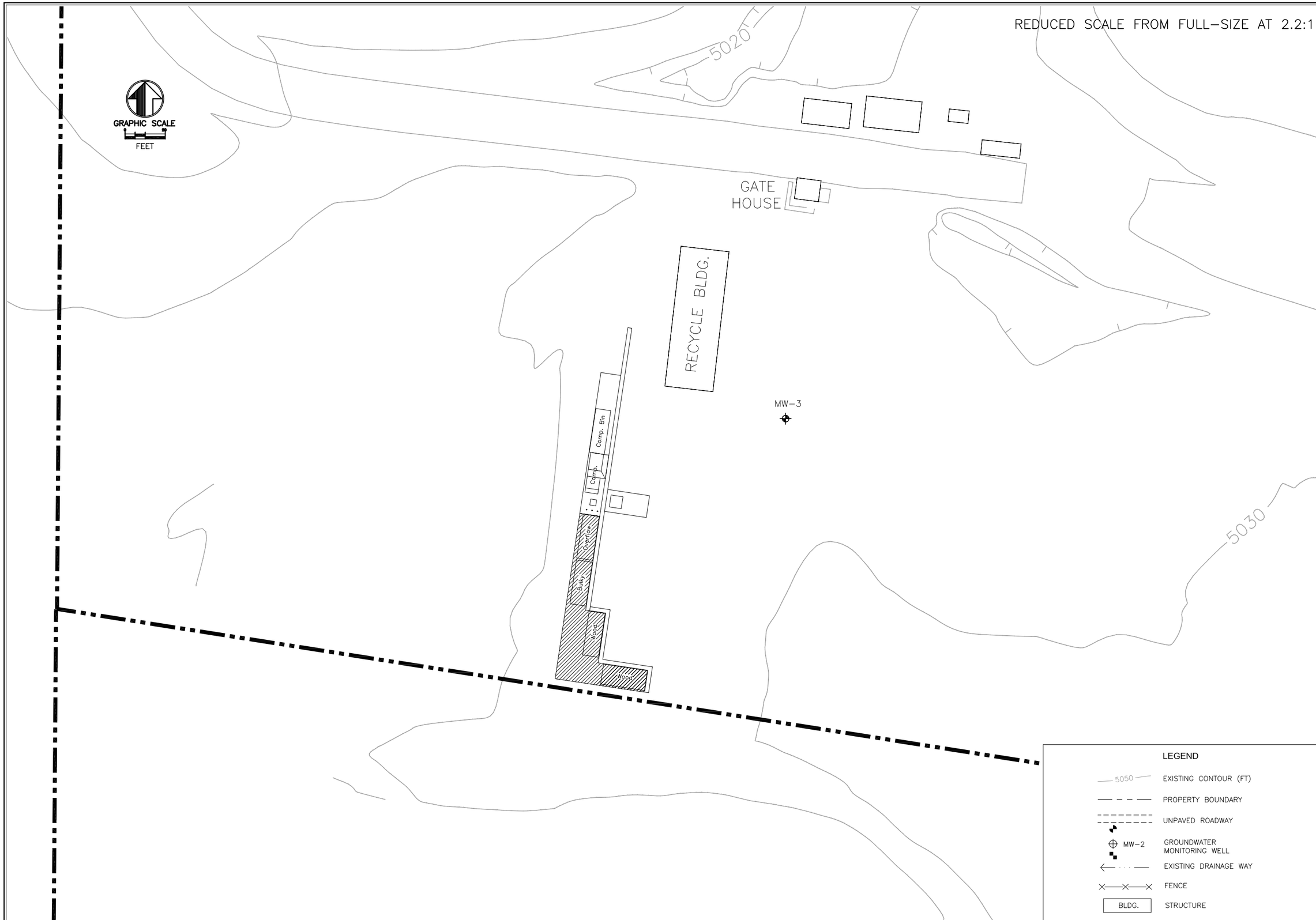

RELEASES/REVISIONS			
No.	Date	Description	By

AVALEX INC.
Civil Engineering and Environmental Services
P.O. Box 550218, South Lake Tahoe, CA 96155
Phone (530) 543-3200 www.avalex.info

SITE PLAN
LOYALTON TRANSFER STATION
SIERRA COUNTY DEPARTMENT OF PUBLIC WORKS
LOYALTON, CALIFORNIA

Date: May 23, 2019
Designed By: CWM
Drawn By: CWM
File: ConcretePad.dwg
Project No.: 97-005

SHEET 2 OF 3 SHEETS

REDUCED SCALE FROM FULL-SIZE AT 2.2:1

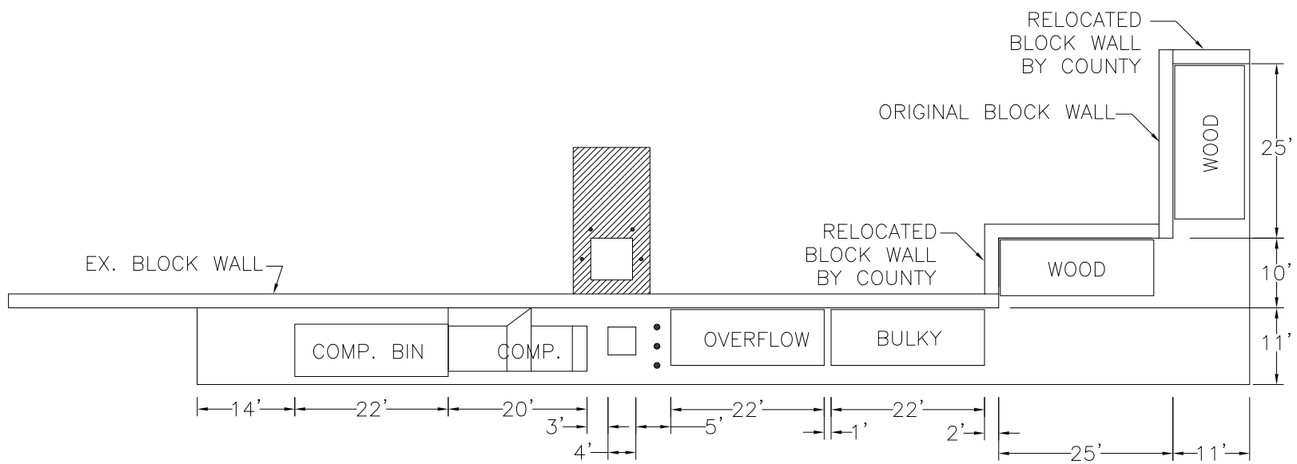

SITE LAYOUT (1/3)

SCALE 1" = 10'

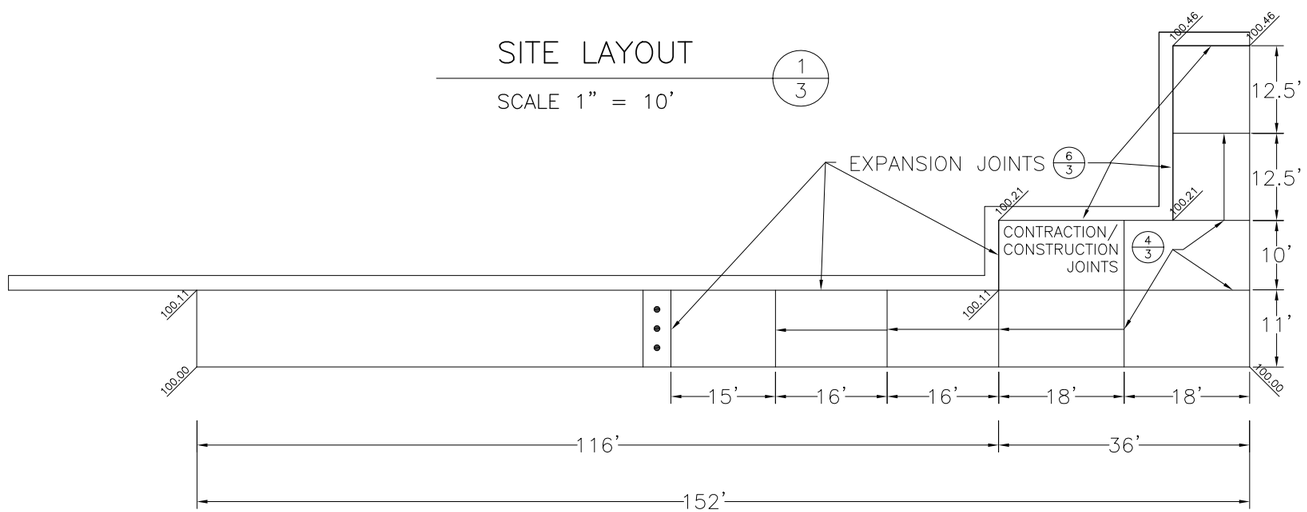

SLAB LAYOUT (2/3)

SCALE 1" = 10'

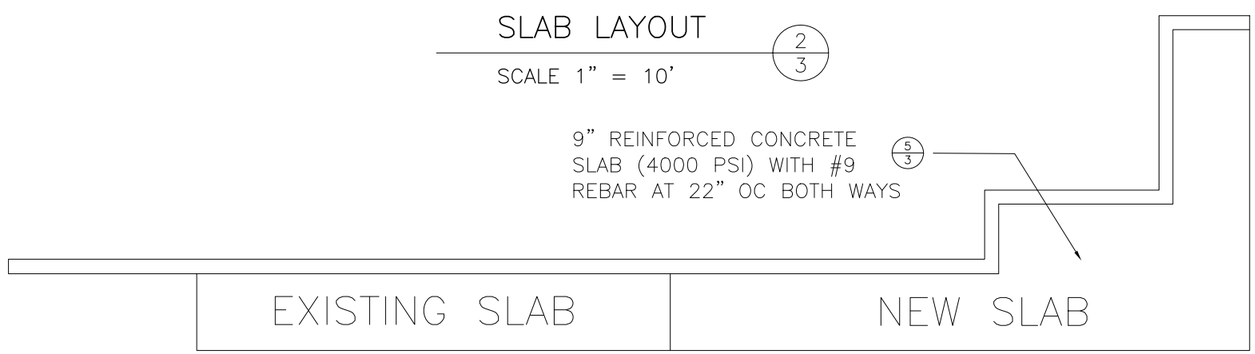

SLAB AREA (3/3)

SCALE 1" = 10'

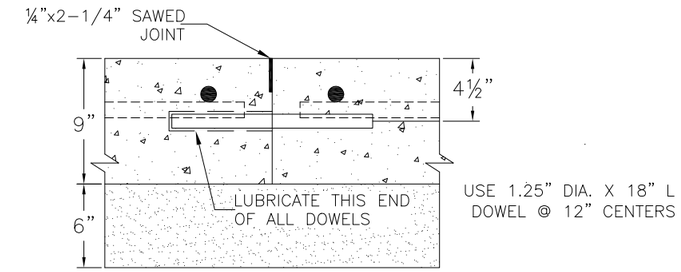

CONTRACTION/ CONSTRUCTION JOINT (4/3)

SCALE ½" = 1'

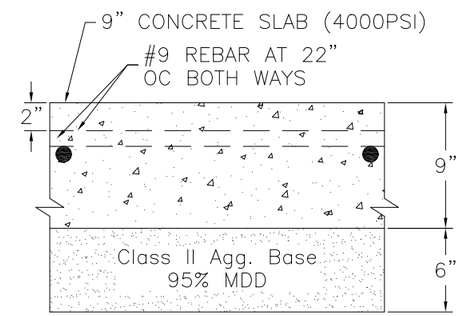

SLAB SECTION (5/3)

SCALE ½" = 1'

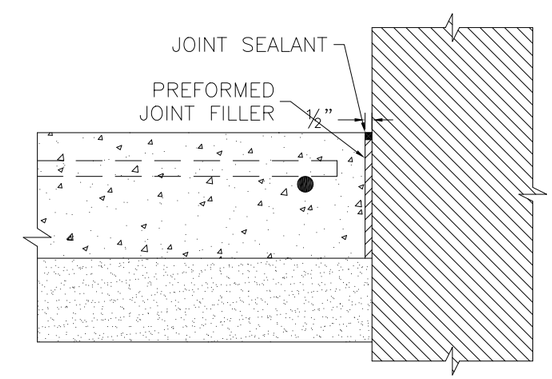

EXPANSION JOINT (6/3)

SCALE ½" = 1'

MATERIALS AND CONSTRUCTION SHALL BE IN ACCORDANCE WITH ACI 360 R-10 SLAB-ON-GRADE IN CONFORMANCE WITH APPLICABLE ACI AND ASTM STANDARDS.

RELEASES/REVISIONS			
No.	Date	Description	By

AVALEX INC.
Civil Engineering and Environmental Services
P.O. Box 550218, South Lake Tahoe, CA 96155
Phone (530) 543-3200
www.avalex.info

SITE/SLAB LAYOUT
LOYALTON TRANSFER STATION
SIERRA COUNTY DEPARTMENT OF PUBLIC WORKS
LOYALTON, CALIFORNIA

Date: May 23, 2019
Designed By: CWM
Drawn By: CWM
File: ConcretePad.dwg
Project No.: 97-005