Reviving the Process Map

by **T.M. Kubiak**

Recently, I was conducting a series of project reviews at a client site. Several Green Belt (GB) teams, their project Black Belts (BBs) and Champions, and two Master Black Belts (MBBs) participated in the reviews.

Toward the end of the reviews, I quietly leaned over to one MBB and asked why the teams were using basic flowcharts instead of process maps. The MBB nonchalantly replied that process mapping took too much time and basic flowcharts were much easier to use and understand for all concerned.

Imagine my surprise! Here was an MBB essentially discounting the use of one of Six Sigma's most fundamental tools. Concerned by this, I spoke with several different colleagues later that same week only to find they have noticed the same alarming trend. They, too, were being told that:

- Flowcharts are easier to build.
- Process maps take longer to complete. The delays hamper the ability to show results quickly.
- Teams don't like all the details associated with process maps. The process maps seemed cluttered.

After reflecting on this input, my initial reaction was to conclude that I was drawing too fine a distinction between flowcharts and process maps. Should I really care? After all, didn't they both use the same symbols? Didn't both depict the flow of the process and define the decisions that have to be made? The answer, of course, was a resounding yes.

Still unsettled and uncomfortable with pushing my concern aside so quickly, I continued to ponder the issue. Process maps reveal much more about a process than flowcharts do, and they provide the GB team and project BB with more guidance. Process maps address the key foundational concept of Six Sigma: the concept of Y = f(X), or simply, outputs are a function of inputs.

You're saying to yourself, "Hey, we all know this. Let's move on." At some cognitive level, this might be true. Perhaps the basic concept of process maps has not been sufficiently internalized by practitioners, allowing it to become an underused tool, perceived as being inefficient and cumbersome. Instead, it should be the foundational concept.

> Often overlooked, this tool is essential for any Six Sigma project.

Categorizing and Classifying Process Input Variables

Let's explore the basic anatomy of a process map, as shown in Figure 1. Input variables, the X's, flow into a transform function called a process. One or more desired outputs flow from the process.

Notice the inputs appear below the flow line while outputs appear above the flow line. This is simply a matter of aesthetics.

Otherwise, inputs and outputs appearing on the same line would significantly clutter the map, particularly when multiple process blocks appear adjacent to one another. This setup isn't earth-shattering, but eliminating it is helpful.

Notice the list of input variables. They should be familiar, because they represent the typical categories (also known as the 6Ms) of the main bones in a fishbone diagram.

You'll note some authors include management as another category and call the list the 7Ms. Using the 6M's as a structured approach provides some assurance that few inputs will be overlooked.

Table 1 (p. 60) identifies each of the M's, along with alternative terminology that might be used in service or transaction based industries, for example. Commentary and insight about each M also has been included.

One important aspect regarding input variables not visible in Figure 1 is their classification. Classifying input variables helps practitioners focus on those inputs that are controllable and guides practitioners away from spending time and energy on those that are not.

An example of a common classification scheme is shown in Table 2 (p. 61).

(continued on p. 62)

FIGURE 1 Demonstrating the Y = f(X) Concept

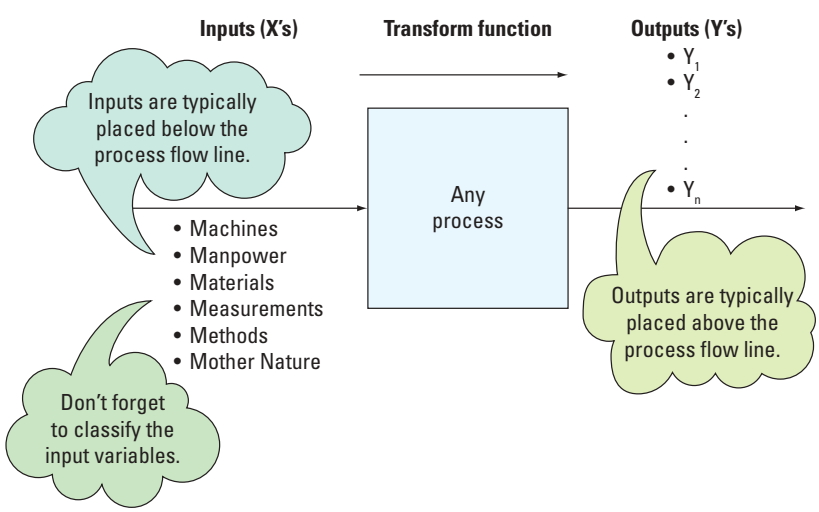

TABLE 1 The 6Ms: Useful Categories When Thinking About Input Variables

Input (X)	Alternate Terminology	Comment
Machines	Equipment	Machines or equipment do not need to be costly or even high-tech. Don't overlook the basics. For example, service and transactional based processes might include the use of simple devices such as a stapler or a highlighter. When considering input variables of this nature, it is often helpful to develop a list of tools required.
Manpower	People	Human type resources might take various forms such as skilled technicians, engineers or administrative personnel. Even highly automated processes occasionally might call for human support when preventive or corrective maintenance or actions are required.
Materials	Materials	Materials might include raw materials or even intermediate subassemblies. Materials are often consumed or transformed during the execution of a process.
Measurements	Measurements	Always remember to ensure the measurement system is capable. If a measurement system is considered capable when it isn't, erroneous results might occur. This might include overlooking true critical input variables or concluding some variables are critical when they are not.
Methods	Processes	Processes come in all shapes and sizes. They might be well defined or very loosely defined. In the context of a manufacturing environment, there is a category of processes known as special processes.
Mother Nature	Environment	Variables in this category can be associated with an internal or external environment. This is an important distinction, particularly when determining whether such variables are noise variables. For example, temperature and humidity would likely be considered controllable variables when the underlying process takes place in a clean room environment. However, if process is conducted outdoors, temperature and humidity might be considered noise variables. They might be impossible or too costly to control.

Quality Education for Quality Professionals

Master of Science in Quality Assurance

Graduate Green Belt Certificate

FLEXIBLE
Complete ALL of your coursework online at your location.

AFFORDABLE
All distance students pay the same low tuition rate of $227 per credit hour.

RIGOROUS
Learn from PhD-level instructors who know the theory AND its application in the quality field.

www.msqa.edu/online

678-915-SPSU (7778)
1-800-635-3204

1100 South Marietta Parkway
Marietta, Georgia 30060-2855

Southern Polytechnic
Georgia's Technology University

INSIGHT TECHNOLOGY

Insight Technology develops & produces highly sophisticated laser aiming & illumination devices, night vision devices, laser rangefinder and thermal imaging systems for the US Military, Federal law enforcement agencies, allied nations, state and local law enforcement, as well as the general public. All positions provide competitive salary, alternative work schedule, generous vacation time, 10 paid holidays, health, dental, disability and life insurance, tuition reimbursement, and an opportunity to participate in a matching 401K plan.

QUALITY SYSTEMS ENGINEER

This is a fast paced position requiring the ability to multi task, working several projects simultaneously. The Quality Systems Engineer will develop test plans, monitor product during the manufacturing cycle and be responsible coordinating all aspects of testing. This includes both internal and contract testing and assuring that both the specification and the customer are satisfied. At the conclusion of testing, a test report with failure analysis is required. Responsibilities include: review contracts for system requirements, review and approve performance/product specifications, generate quality validation plans, collect and evaluate test data and prepare test reports, work with Design and Manufacturing Engineers to determine root cause and corrective action solutions, create detailed schedules for testing and other services, review work instructions, route sheets and other related documents, interface with customer quality representatives, prepare and present quality status to senior management / customers.

The Quality Systems Engineer will attend design reviews and provide substantial input to the designers for manufacturability and compliance to specification. The Quality Systems Engineer may be required to fill the position of Quality Engineer for a Production line. This includes training of in process inspectors, generating and/or reviewing work instructions and interfacing with the customer.

Requirements: BSME or BSEE, minimum of 5 years experience as a Quality Systems Engineer, experience working with Thermal, Optical and Image Intensifier Systems.

Preferred Qualifications: MS Degree, ASQ certification, Opto/Mechanical design experience, Six Sigma Black Belt.

Please submit salary requirements and resume to:
9 Akira Way, Londonderry, NH 03053
hrdept@insight-tek.com
EOE/AA/M/F/Vet/Disab. NO PHONE CALLS PLEASE
Electronic Resumes in Microsoft Word® or pdf only

TABLE 2 Classifying Input Variables

Variable Designation	Type of Variable	Comment
C	Controllable	The process owner has control of these variables, regardless of whether control is exercised. Characteristics or values of controllable variables can be set or manipulated to drive one or more output variables (Y's) in a desired direction.
N	Noise	Noise variables cannot be controlled or might be too expensive to control. It is important that such variables be defined so the Green Belt team or project Black Belt knows which variables should not be addressed. Attempts to control noise variables often result in frustrated teams and failed projects.
SOP	Standard operating procedure (SOP)	An SOP is a unique and predefined way of performing a process. For example, it might be an instruction document for assembling a bicycle or preparing an expense report. Just because an input variable is defined as an SOP, no inference should be made regarding the quality of the process encompassed by the procedure. SOP variables are a subset of controllable variables. Designating an input variable as an SOP does not exclude it from the process owner's control. However, an SOP does suggest that minimal variation is probably associated with it.
X	Critical	Critical input variables are another subset of controllable variables. These are variables that have been determined to have a significant impact on one or more output variables (Y's). Significance might be demonstrated through statistical tools such as design of experiments or regression. Early in the define, measure, analyze, improve and control process—and particularly before the completion of the analyze phase—use of this designation should be considered tentative at best. Only after the analyze phase is complete can it be determined with some degree of certainty that a variable is a critical input. Be careful not to confuse this classification of variable with the X used in the equation Y = f (X).

Pharmaceutical/Bio-Tech Opportunities

A growing investigational drug management provider has multiple openings in Frederick, MD, for the following positions:

Research Associates
Assist in investigational drug development program, QA/QC, analysis, analytical methods and documents development. Prep specs, test SOPs, calibrate equipment, prepare protocols, develop formulations. Requires BS or equivalent in chemistry or related fields with 2 years' experience, or any suitable combination of education/training or experience. **Code#110**.

Pharmaceutical Formulation Development Chemists
Develop formulations, conduct pilot batches, establish product specs, prepare batch manufacturing orders, establish scale up specifications and validation protocols, participate in process validation, prepare reports, establish manufacturing process, coordinate bio-equivalence, manage regulatory affairs. **Code #111**.

Analyze and develop validation of analytical methods/formulations/packaging of double blind clinical study medications/container for clinical trials, prepare protocols for clinical study products, participate in drug development programs, prepare SOPs. **Code #112**.

Requires BS or MS or equivalent in pharmaceutical sci, chemistry, or related field, with 2 to 5 years' experience.

Mail resumes, stating code number, to: HR, EMINENT Services Corporation
7495 New Technology Way
Frederick, MD 21703
EOE

(continued from p. 59)

Properly classifying input variables requires recognizing the need to fully understand a process in relation to the culture and business needs of the organization.

Let's assume a technician represents the manpower required to perform a given process. What classification or variable designation from Table 2 (p. 61) should a GB team assign it?

- If the team determines the skill and experience level of the assigned technician can be appropriate to the needs of the process, then the team would classify the technician as a controllable input variable. It would appear in the process input list as "technician (C)." The input variable is followed by the classification designation in parentheses.
- If the team determines management will never invest in training technicians and the technician assigned to the process is fixed, the team might consider classifying the technician as a noise input variable. If this is the case, then it would appear in the process input list as "technician (N)."

This example illustrates the need to revisit processes periodically because organizations continually change and evolve. New and insightful management might recognize the need to grow and improve the skill level of its technicians. Hence, input variables previously classified as noise might now be considered to be controllable. Likewise, the opposite might become true.

When counseling teams, I have generally found it more effective to focus on addressing whether an input variable can be controlled instead of trying to determine whether it will ever be controlled. This avoids the complications of having a team second guess management.

Gaining Insights From Process Maps

Figure 1 (p. 59) demonstrates the basic architecture and components of the process map. If we expand Figure 1 to represent a series of linked processes or even subprocesses, we obtain something such as the map in Figure 2.

Though still simple in nature, Figure 2 depicts a representation of

TABLE 3 Identifying Potential Issues With Inputs and Outputs

Variable	Comment
A	Input to processes 1, 2 and 3. However, it was not an output from any of the processes within the scope of the project at hand. If it is output from a process outside the scope, the project team should find its source to ensure its availability when required.
B	Input to processes 1 and 3. However, it was not an output from any of the processes within the scope of the project at hand. If it is output from another process outside the scope, the project team should find its source to ensure its availability when required.
C	Input to processes 1 and 4. However, it was not an output from any of the processes within the scope of the project at hand. If it is output from another process outside the scope, the project team should find its source to ensure its availability when required.
D	Input to process 1. However, it was not an output from any of the processes within the scope of the project at hand. If it is output from another process outside the scope, the project team should find its source to ensure its availability when required.
E	Input to processes 1, 2, 3 and 4. However, it was not an output from any of the processes within the scope of the project at hand. If it is output from another process outside the scope, the project team should find its source to ensure its availability when required.
F	Output from process 1 and input to processes 2 and 3.
G	Output from process 1 and input to process 2.
H	Output from process 1 and input to process 3.
I	Output from process 2. This variable is no longer found in the remainder of the process map. It might be an extraneous output that is no longer needed, and process 2 was never changed to eliminate its production. Alternately, it could be used in another process beyond the scope of the project at hand. Either way, action is required.
J	Output from process 2 and input to process 4.
K	Output from process 3 and input to process 4.
L	Output from process 4. It might be used in another process.
M	Output from process 4. It might be used in another process.
N	Input to process 4. However, it was not an output from any of the processes within the scope of the project at hand. If it is output from another process outside the scope, the project team should find its source to ensure its availability when required.
O	Input to process 4. However, it was not an output from any of the processes within the scope of the project at hand. If it is output from another process outside the scope, the project team should find its source to ensure its availability when required.

FIGURE 2 Analyzing Inputs and Outputs

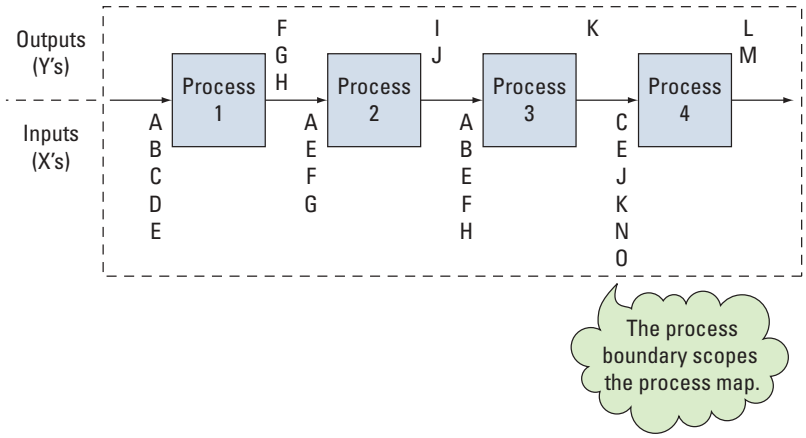

processes we are more likely to encounter in any organization. For the sake of convenience, inputs and outputs in Figure 2 have been defined simply as letters. Since input variable classifications are not the focus of this section, they have been omitted.

Upon reviewing Figure 2, several immediate observations can be made, including:

- Processes should have boundaries. Define them.
- Identical inputs might be required for different processes.
- Multiple process outputs might occur.
- Outputs of one process might become inputs of another process.
- Some outputs might be linked to processes outside the process boundaries.

Table 3 summarizes these observations to each of the variables in Figure 2. Note that some of the comments in Table 3 are essentially statements of fact, while others demand action, seek information or require further investigation.

Summary

Perhaps this column has provided motivation and a call to action for the Six Sigma practitioner to revive the process map and use this simple qualitative tool to extract information and guidance not present in a basic flowchart.

A set of starting categories useful for identifying input variables was presented, and an input variable classification scheme was suggested. The process map was reconnected to the fundamental equation of Six Sigma: Y = f(X). Additionally, input and output variables identified on a process map were analyzed in the context of a bounded process.

I have seen where the absence of a process map—or the preferred use of a flowchart—has delayed, or in some cases, caused a project to fail. And I'll bet you have seen it, too.

A well-developed process map can help avert these failures. It can serve as an effective communication tool and be a constant reminder of where a team should focus its time and energy.

BIBLIOGRAPHY

Benbow, Donald W., and T.M. Kubiak, *The Certified Six Sigma Black Belt Handbook*, ASQ Quality Press, 2005.

Galloway, Diane, *Mapping Work Processes*, ASQ Quality Press, 1994.
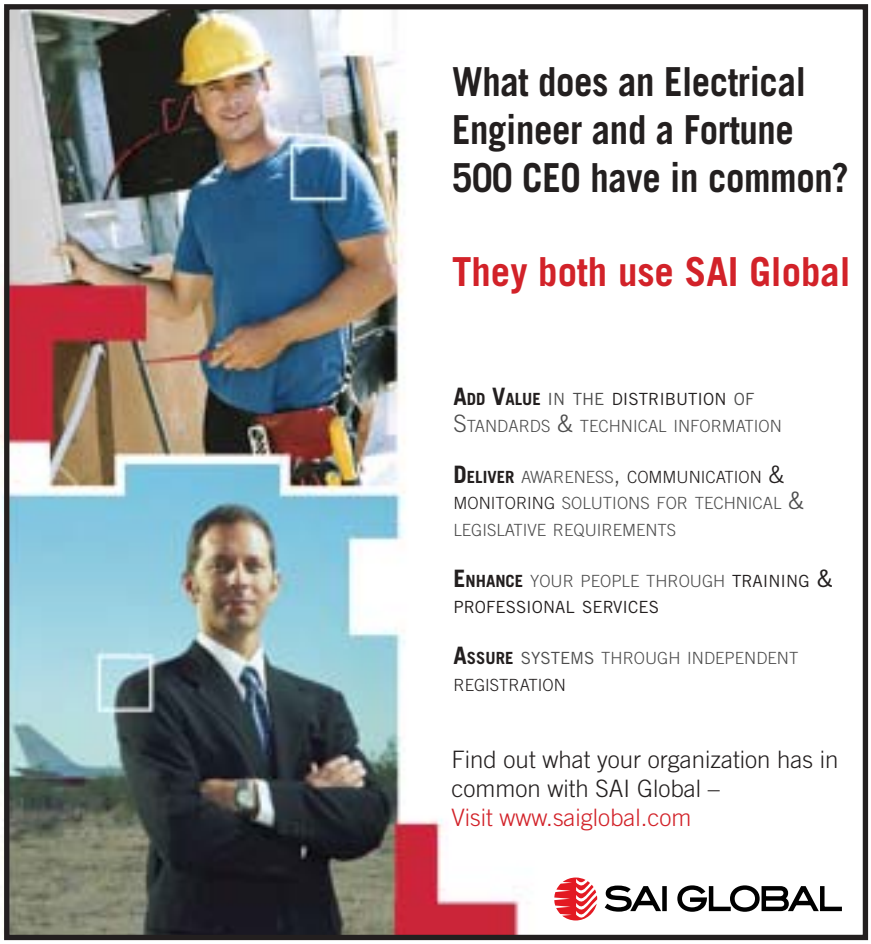
T.M. KUBIAK *is an independent consultant in Charlotte, NC, and the co-author of* The Certified Six Sigma Black Belt Handbook. *Kubiak serves on many ASQ boards and is the immediate past chair of the Publication Management Board. He is a senior member of ASQ.*