Technical Requirement Specification of Video Interface Card (VIC) Module

DOC NO: MCSRDC/TD/VIC/HW/TR/01/00

MISSION & COMBAT SYSTEM RESEARCH & DESIGN CENTER
DESIGN COMPLEX
HINDUSTAN AERONAUTICS LIMITED
BANGALORE – 560017

This document contains proprietary information of Hindustan Aeronautics Ltd. This document is confidential and must not be reproduced, copied, disclosed or utilized in any way without prior written permission of Hindustan Aeronautics Ltd

LEFT BLANK

Table of Contents

1. PURPOSE....4
2. SCOPE....4
3. CONTROL OF DOCUMENT....4
4. INTERPRETATION....4
5. TECHNICAL REQUIREMENTS OF VIC....4
5.1 ARCHITECTURE OF VIC....5
5.2 Functional and Design Requirements of VIC1....7
5.3 Functional and Design Requirements of VIC2....8
5.3.1 IMx.6/8 & It's Peripheral Requirements....10
5.4 VIC1 & VIC2 General Requirements....10
5.5 Power Supply Requirements....11
5.6 Software Requirements....11
5.7 Firmware Requirements....12
5.8 VIC PCBs SPECIFICATIONS....12
5.9 Environmental and EMI-EMC Requirements....13
5.10 OTHER REQUIREMENTS OF VIC....13
6. Test Set Up & Development Station Requirements....14
6.1 Controller of Test Setup & Development Station....15
6.2 Software Requirements of Test Setup & Development Station....15
7. DESIGN REVIEW....15
8. PROPOSAL....15
9. LIST OF DELIVERABLES....16
10. DELIVERY SCHEDULE....16
10.1 Phase-I....16
10.2 Phase-II....17
11. INTEGRATION....17
12. PACKING....17
13. ACCEPTANCE CRITERIA....17
14. REPEAT ORDER REQUIREMENT (OPTIONAL)....18
15. WARRANTY SUPPORT....18
Annexure-1: Checklist for Electronic Modules (As per applicability)....19
Annexure-2: Checklist for Software (As per applicability)....22
Annexure-3: Checklist for Mechanical Modules (As per applicability)....23

1. PURPOSE

This document is to define the technical requirements for the submission of techno commercial proposal for development and delivery of the

- Video Interface Card (VIC)
- VIC test setup and

  The vendor shall design, develop and test the VIC for Technology Demonstration and provide product support during integration and flight clearance.

2. SCOPE

The scope of this document is to define the design, development, fabrication, testing, acceptance method, delivery schedule & Warranty requirements for the development of the Video Interface Card (VIC) and its test setup.
The technical requirements and details of all the development phase activities are specified in further sections of this document.

3. CONTROL OF DOCUMENT

This document contains proprietary information about the requirements of Video Interface Card (VIC). This document is restricted and must not be reproduced, copied, disclosed or utilized in any way without prior written permission of Hindustan Aeronautics Limited. This document is classified as “Restricted”.

4. INTERPRETATION

The general instructions for this document are as follows:
“May” is used for an allowed action
“Shall” is used for a mandatory action
“Should” is used for a strongly recommended action
“Will” and “Is” are used for declaration of intent

5. TECHNICAL REQUIREMENTS OF VIC

The Video Interface Card shall be responsible for processing of all the video inputs & outputs with internal health management. The Video Interface Card shall comprise of two standard Rugged 3U cards VIC1 & VIC2. VIC1 & VIC2 shall be responsible for Video Generation, Format conversion and Switching. VIC1 & VIC2 shall be Rugged, small form factor, conduction cooled, power optimized module. Edge connector of VIC1 & VIC2 shall be high density connectors. VIC2 shall be designed based on Imx.6 or Imx.8 microprocessor with PCI-e interface. These Cards shall be installed in a unit which complies with the testing requirements of MIL-STD-810F, MIL-STD-461E and MIL-STD-704D and designed for use in Mission critical systems.

5.1 ARCHITECTURE OF VIC

- VIC shall comprise two 3U Boards.
- VIC1 & VIC2 shall be designed together at starting of the project after place of PO.
- VIC Fabrication/Implementation shall be taken up in two phases.
- All Phase-I requirements shall be catered in First 3U Board (VIC1).
- Phase-II requirements shall be catered in Second 3U Board (VIC2).
- VIC1 may have part of Phase-II interfaces. If VIC1 has circuitry of Phase-II, it is not necessary to mount components of Phase-II during Phase-I evaluation and acceptance. However if any common components are used to meet Phase-I & Phase-II interfaces together, those common components shall be mounted and tested.
- VIC1 & VIC2 together shall meet Phase-I and Phase-II requirements.
- Both Boards may have Daughter Boards to meet the requirement.
- Each Board Dimensions: As per VITA-46 (3U) without Daughter Board. With Daughter Board also Length and Width shall be as per VITA-46 (3U). Thickness along with Daughter Board shall be less than 1.5 times the thickness allowed as per VITA-46 (3U) (Board Slot Thickness).
- Weight: Both Boards together less than 1400 grams.

Note1: Phase-II Boards (VIC2) Fabrication & Implementation shall start after completion of Phase-I and go ahead from MCSRDC-HAL, however design of Phase-II also shall start along with Phase-I in parallel.

Note2: The Design scheme given in this document is a tentative scheme which will be finalized during design phase. Considering Complexity of Board, vendor shall accommodate a maximum of 20% of changes during the design and implementation phase.

Tentative Block Diagram of VIC is shown below. Highlighted portion in Block Diagram which is marked as “Phase-II” shall be demonstrated in Phase - II.

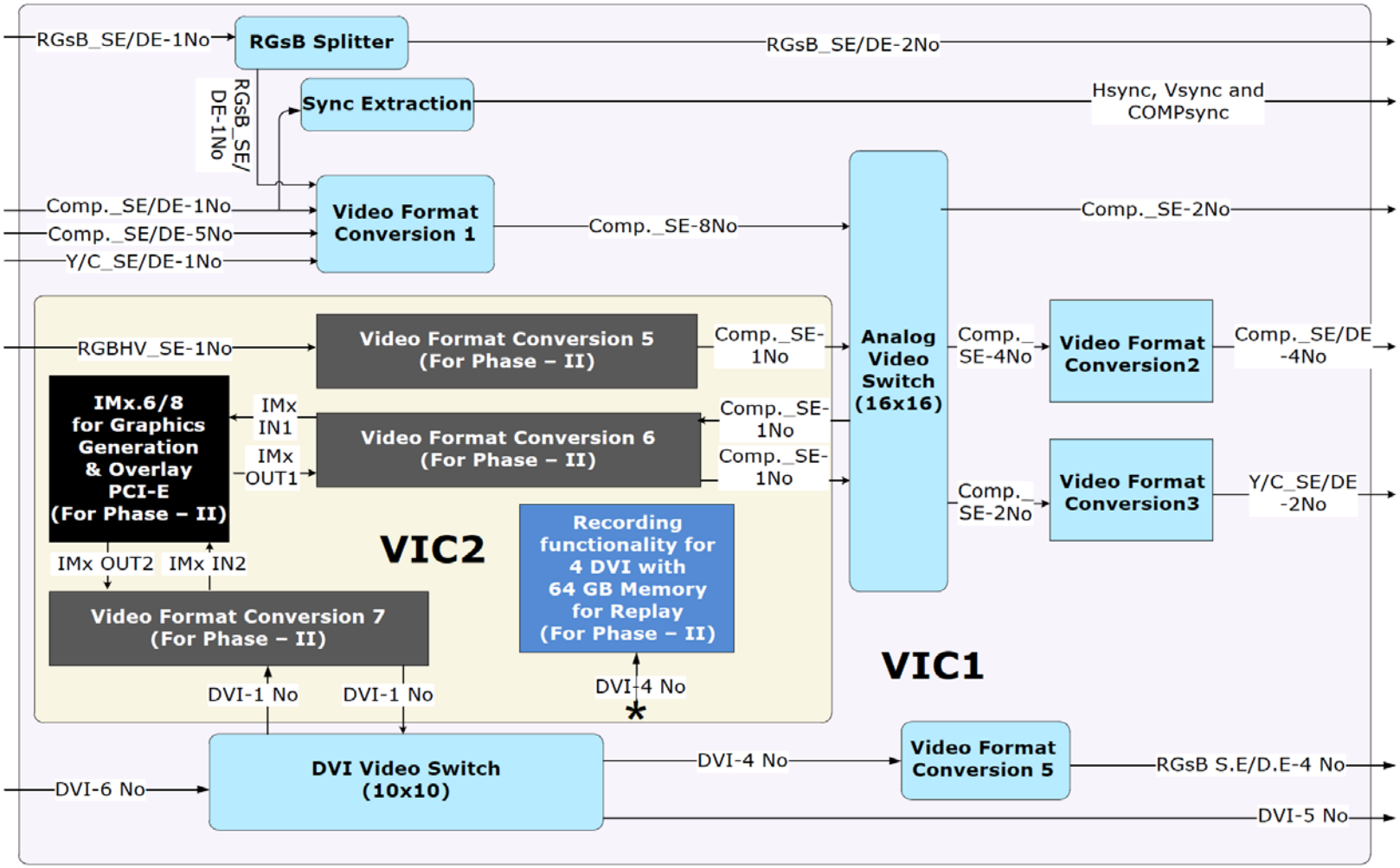

Figure 1: VIC Block Diagram

5.2 Functional and Design Requirements of VIC1

- VIC1 shall be Standard 3U VPX Board with High Density Backplane Connector.
- VIC1 shall be an intelligent module self sufficient to meet all functional requirements of Phase-I.
- Video Switching, internal operations & other external interfaces shall be controlled by FPGA or any other controller.
- Vendor shall demonstrate switching functionality of VIC1 by taking commands through External I2C/RS422 interface.

The tentative external electrical interface/type of signal to be provided on the backplane for VIC1 is as follows:

S/N	Item	Requirement			Remarks
		Video Type	Video Format	Qty	
1.	External Video I/P (Analog)	S.E /D.E, Interlaced	Composite	6	
			Y/C	1	
			RGsB	1	
2.	External Video I/P (Digital)	D.E, 50Hz/60Hz Refresh Rate, Progressive	DVI	6	
3.	External Video O/P (Analog)	S.E /D.E, Interlaced	Composite	4	
			Y/C	2	
		S.E, Interlaced	Composite	2	
		S.E /D.E, Interlaced	RGsB	6	4 No of Progressive DVI to Interlaced RGsB is required. 2 No of RGsB are from RGsB Splitter.
4.	External Video O/P (Digital)	D.E, 50Hz/60Hz Refresh Rate, Progressive	DVI	5	
5.	VIC2 to VIC1 (Analog)	S.E, Interlaced	Composite	2	Routing from Connector to Analog Switch

S/N	Item	Requirement			Remarks
		Video Type	Video Format	Qty	
6.	VIC2 to VIC1 (Digital)	D.E, 50Hz/60Hz Refresh Rate, Progressive	DVI	1	Routing from Connector to DVI Switch
7.	VIC1 to VIC2 (Analog)	S.E, Interlaced	Composite	1	Routing from Analog Switch to Connector
8.	VIC1 to VIC2 (Digital)	D.E, 50Hz/60Hz Refresh Rate, Progressive	DVI	1	Routing from DVI Switch to Connector
S/N	**Item**	**Requirement**	**Remarks**		
9.	HSync, VSync & Composite Sync O/P	VIC1 shall extract Horizontal Sync, Vertical Sync from S.E/D.E Composite I/P.	Video I/P taken for Sync generation also shall be given to Analog Video Switch.		
10.	RS232	4 No's	Configurable Up to 115.2kbps		
11.	RS422	6 No's	Configurable Up to 115.2kbps		
12.	GPIO (TTL I/O)	4 No's	For Debug and glue logic purpose		
13.	I2C	1 No's	For Card to Card communication. Configurable as Master or Slave.		
14.	JTAG	Depends on Design	To be provided on board as a Header connector.		

Table 1: External Interfaces of VIC1

5.3 Functional and Design Requirements of VIC2

- VIC2 shall be Standard 3U VPX Board with High Density Backplane Connector.
- Graphics Video Generation, Graphics Overlay, Digital MAP Generation, Switching, DVI Videos Recording, internal operations & other external interfaces shall be done by IMx.6/8 processor.
- Program Loading and Debugging of IMx.6/8 processor shall be possible through Backplane.

The tentative external electrical interface/type of signal to be provided on the backplane for VIC2 is as follows:

S/N	Item	Requirement			Remarks
		Video Type	Video Format	Qty	
1.	External Video I/P (Analog)	S.E , Interlaced/Progressive	RGBHV	1	Interlaced/Progressive shall be configurable by changing Firmware
2.	External Video I/P (Digital)	D.E, 50Hz/60Hz Refresh Rate, Progressive	DVI	4	For Video Recording
3.	VIC1 to VIC2 (Analog)	S.E, Interlaced	Composite	1	Routing from Connector to Format Conversion Circuitry
4.	VIC1 to VIC2 (Digital)	D.E, 50Hz/60Hz Refresh Rate, Progressive	DVI	1	Routing from Connector to Format Conversion Circuitry
5.	VIC2 to VIC1 (Analog)	S.E, Interlaced	Composite	2	Routing from Analog Switch to Connector
6.	VIC1 to VIC2 (Digital)	D.E, 50Hz/60Hz Refresh Rate, Progressive	DVI	1	Routing from DVI Switch to Connector

S/N	Item	Requirement	Remarks
7.	RS232	4 No's	Configurable Up to 115.2kbps
8.	RS422/485	6 No's	Configurable Up to 115.2kbps
9.	Ethernet	2 No's	Configurable 10/100/1000 Mbps One for Debug/Program loading & One for Milking of Recorded Video Data
10.	GPIO (TTL I/O)	8 No's	For Debug and glue logic purpose
11.	I2C	2 No's	For Card to Card communication. Configurable as Master or Slave.
12.	JTAG	Depends on no of Processors and FPGAs used	To be provided on board as a Header connector.
13.	VPX (PCI-E)	One x4 Lane or Four x1 Lanes	For inter-card communication. One x4 Lane or Four x1 Lanes shall be configurable.

Table 2: External Interfaces of VIC2

5.3.1 IMx.6/8 & It's Peripheral Requirements

Suitable IMx.6/8 and its peripheral circuitry shall be mounted or plugged on VIC2. Vendor may use Daughter Board if required.

IMx.6/8 and its peripheral circuitry shall meet the following requirements.

- Minimum 4 GB DDR4 SDRAM
- Two No of 64 GB or better Non-Volatile Memory (eMMC or NAND or NOR). One for Digital MAP Storage and other for Video Recording.
- Minimum One no of x4 PCI-e Lane. (Part of External interface requirement). Shall be configurable as One x4 Lane or Four x1 Lanes.
- Minimum Two Graphics Headers. Each Graphics Header shall be capable of generating configurable Video Resolution (1024x768 or Better, Lower resolutions also shall be possible) and Refresh Rate (50Hz/60Hz).
- Shall provide minimum two video outputs.
- Digital MAP Generation shall be possible by reading files that will be kept in Non-Volatile Memory.
- Image/Symbology generation shall be possible by taking the data from PCI-e Port.
- Recording of 4 No of DVI Videos shall be done in Non-Volatile Memory and milking out of video data shall be possible through Ethernet.
- Shall accept Minimum two video inputs and overlay of graphics shall be possible.

Necessary circuitry shall be implemented on VIC2 such that IMx.6/8 controls all other interfaces on VIC2.

Note1: If any of the above requirements are not met by IMx.6/8 then vendor shall use additional circuitry to meet the above requirements.

5.4 VIC1 & VIC2 General Requirements

- Suitable filtering and protection circuitry to be used for all video inputs and outputs.
- Video line impedances and PCB track characteristic impedances will be finalized during design phase.
- VIC1 & VIC2 shall be cable of taking video inputs from the sources connected by cables extended up to 10 meters length.
- VIC1 & VIC2 shall be cable of driving video outputs to sinks connected by cables extended up to 10 meters length.
- Necessary circuitry shall be made wherever
  a) Video conversions are required.
  b) Single Ended (S.E) to Differential Ended (D.E) and vice versa video conversions are required. In these cases Pass through mode also shall be possible for S.E to S.E.

c) Progressive to Interlaced and vice versa video conversions are required.
d) Video Resolutions conversions are required.
e) Filtering, Impedance Control, Gain Control and Voltage Offsets are required.

- On board temperature sensor shall be present wherever hot spots are identified during design phase.
- General Purpose I/O headers – for programming debugging etc shall be provided.
- Health/ status LEDs, Watchdog timers shall be provided.
- Appropriate Heat sink, wedge lock and extractor shall be provided by the Vendor.
- Program Loading and Debugging shall be possible through any of the external interfaces.

5.5 Power Supply Requirements

The modules shall draw their power from +12V, +5V, +3.3V, -12V regulated supply rail with ±5% tolerance.
The maximum power drawn from the supply shall be less than 15 Watts per Board i.e both Boards together less than 30 Watts.
The distribution of power on each voltage shall be finalized post placement of PO within 3 weeks.
If any Power Sequencing is required, Vendor shall provide necessary circuitry in VIC1/VIC2 itself.

5.6 Software Requirements

Vendor shall provide necessary Softwares and tools that are required for VIC software development in a Semi-Rugged Portable Controller which is part of Test Set Up & Development Station.

Vendor shall provide suite of firmware consisting of drivers, communication libraries and signal processing libraries.

Vendor shall prove all functionalities of the VIC modules with BSP, drivers & Acceptance Test Software.

Vendor shall demonstrate Graphics Generation, Graphics Overlay on Input Videos, Video Switching and Digital MAP Generation using Bear Metal Software or Linux during VIC2 acceptance. Vendor shall provide support to HAL for porting Vx-Works RTOS on VIC2 during Warranty Period.

The Acceptance Test Software shall have two parts. One part shall be in VIC Boards. Second Part shall be in Test Controller. The software in Test Controller

shall have windows based GUI (written in VC++ or Python) for providing test commands and monitoring the test results. VIC1/VIC2 shall receive and respond for commands from PC over serial (RS232) port or Ethernet to allow user to perform debug & system integration activities with the module. The monitor should also provide diagnostic and results display capability.

Library of diagnostic routines shall support Power-up BIT (PBIT), Initiated BIT (IBIT), and Continuous BIT (CBIT) which shall provide minimum of 85% fault coverage. All the firmware used in VIC1 & VIC2 shall be demonstrated by the vendor in test setup provided by vendor for card testing.

The software for different applications will be developed by HAL and vendor shall provide necessary support to HAL during application software integration with the modules.

Note: Vendor shall port & Test the BSP and Acceptance Test Software with vendor supplied Software Packages and Test Set Up.

5.7 Firmware Requirements

All the HDL codes shall be compliant to CEMILAC guide lines as per Complex Electronic Hardware (CEH) certification. Vendor shall provide support during certification of these HDL codes for VIC1 & VIC2.

Vendor shall provide Firmware Loading Procedure, Firmware Design Document and Firmware Revision Control Documents.

5.8 VIC PCBs SPECIFICATIONS

- Main PCB Dimension: As per VITA-46 (3U) for VIC1 & VIC2
- Daughter PCBs Dimension: As per Design complexity
- Thickness of Boards: As per the design complexity
- PCB Material: FR4 (Glass Epoxy) - Rigid PCB
- Ohmic Resistance of Signal Line: <1.5 Ω
- Edge connectors: High density connector (Part no will be decided during Design Phase)
- Surface finish of PCB: ENIG
- Standard: MIL-PRF-55110
- Type: Stripline with Gold Plating

5.9 Environmental and EMI-EMC Requirements

This module shall be installed in a unit which complies with the testing requirements of MIL-STD-810F and MIL-STD-461E. This shall be a rugged solution, will be subjected for qualification of following environmental specification:

- Cooling Method : Conduction-Cooled
- Operating Temperature: -40 to +71 °C (Minimum range)
- Storage Temperature : -55 to +85 °C (Minimum range)
- Vibration: 0.1 g^2/Hz , 20 to 2000 Hz
- Shock: 40 g, 11 ms saw tooth
- Humidity: 0% to 95% non-condensing
- Conformal Coat: required as per use in airborne application

5.10 OTHER REQUIREMENTS OF VIC

- The Technical Specifications for the design of the module shall be finalized between vendor and HAL based on the requirements given in this document, after award of the contract.
- HAL shall be involved in the design and development stages of the module. Vendor shall provide all design files to HAL. HAL has the right to manufacture or reproduce the items.
- Vendor shall design Video Interface Card with complete concurrence of HAL and any minor changes shall be accommodated during the design stage as suggested by HAL.
- Changes identified during the evaluation of the VIC1/VIC2 in different stages of design shall be incorporated in the subsequent stages.
- Documents mentioned in Annexure-1, 2 & 3 shall be provided by vendor during different stages of development of VIC1/VIC2 as required.
- Vendor shall provide Schematics, BOMs, PCB Layouts and Gerbers of VIC1, VIC2 & VIC Test Set Up to HAL. HAL will forward the Gerbers to PCB Fabricator. However Vendor shall have the purchase order with PCB Fabricator.
- For VIC1 & VIC2 Assembly House & PCB Fabricator certification documents have to be submitted to QA before the start of assembly process.
- Vendor shall support HAL in the testing and certification phases of VIC1 & VIC2.
- The PCBs shall be as per MIL-PRF-55110 for all Phases.
- The PCB fabricator shall have MIL approval. Vendor shall provide Group A and Group B certificates.
- Most of the components shall be procured directly from OEM or authorized distributors of OEM. Commercial grade components shall not be used in the design. Components shall be Industrial grade/MIL grade/Automotive grade.
- The Kit binning of components for assembly, COTS screening of the modules and the pre-dispatch inspection shall be carried out at vendor's place in

presence of HAL Design, QC and certification agencies before assembly/testing/delivery of VIC1 & VIC2.

- Vendor shall use appropriate packing box to avoid transit damages and also shall provide handling instructions.
- Vendor shall design VIC1 & VIC2 to accommodate changes of upto 15% (wrt signal level, single ended/differential ended and impedance) during the design stage as suggested by HAL.
- The detailed specifications, design and its implementation shall be discussed with HAL and finalized after the Preliminary Design Review (PDR) for VIC1 & VIC2.

6. Test Set Up & Development Station Requirements

The vendor shall provide a VIC module test setup. The module test set up shall have the following requirements

- Mechanically robust backplane along with Aluminium base with vertical guides, where VIC1, VIC2 & another 3U Module can be fitted.
- Backplane PCB shall be of Industrial Grade.
- Backplane shall have three slots, two for VIC1 & VIC2 another for HAL's 3U Module. Electrical ICD of Backplane will be finalized during design phase.
- Noise Less Cooling Fan which can operate with 230V, 50Hz AC for cooling the VIC1, VIC2, HAL's 3U Module, Test Set Up Guides & other peripherals. Fan ON/OFF Switch shall be provided.
- Industrial Grade Connectors for providing all the required Video Inputs, Video Outputs, Debug Ports & all other external interfaces for testing VIC shall be provided in the Test Set Up.
- Industrial Grade Connectors for providing all the required external interfaces of HAL's 3U Module shall be provided in the Test Set Up. Connector details will be finalized during design phase.
- Video Generators of one no each for each type of input shall be provided. One Composite SE/DE, One Y/C SE/DE, One RGBHV SE, One RGsB SE/DE & One DVI Video Generator shall be provided. Alternatively Vendor may use video converts also by providing one Video Generator and other videos may be generated by using video converters.
- Video Displays of one no each for each type of output shall be provided. One Composite SE/DE, One Y/C SE/DE, One RGsB SE/DE & One DVI Video Display shall be provided. Alternatively Vendor may use video converts also by providing one Video Display and other videos may be converted to Display format by using video converters.
- Semi-Rugged Portable Controller with Ethernet & USB Ports shall be provided.

- RS232/422 shall be connected to UART to USB converter and shall be given to USB Socket of Semi-Rugged Portable Controller.
- Along with test setup all interface cables shall be provided with proper sleeves and designations.

6.1 Controller of Test Setup & Development Station

This section deals with Specifications for Semi-Rugged Portable Controller that shall be used as the main controller for carrying out the functional tests. The controller shall be responsible for testing all the interfaces of the VIC1 & VIC2 through a command line interface or a GUI based interface over serial (USB /Ethernet Interface) port to allow the user to perform debug & system integration activities. This Controller shall be from reputed manufacturer having the potential for future expansion.

6.2 Software Requirements of Test Setup & Development Station

- The Vendor shall provide Operating System (Windows 7/10), Device Drivers, API calls used in its test setup.
- Semi-Rugged Portable Controller shall include necessary software and tools required for VIC1 & VIC2 software development.
- Acceptance Test software development for the main controller and VIC1 & VIC2 shall be responsibility of vendor.
- Self-test software shall be provided to demonstrate the functionality of VIC Test Set Up in standalone mode.
- Licensed Anti-Virus Software shall be provided by Vendor.
- Vendor shall not use any pirated software.
- All Software and Drivers used by Vendor shall be provided in CD/DVDs.

Note: All the software licenses (OS, Anti-Virus Software and any other) shall be provided in the name of MCSRDC, HAL. All the registered phone numbers and emails used for licensing purpose shall be as per MCSRDC, HAL provided data.

7. DESIGN REVIEW

Design Review shall happen during various phases of Design & Development of VIC1, VIC2 & It's Test Set Up.

Vendor shall provide the necessary documents 3 days in advance for the design review at MCSRDC-HAL.

Vendor shall incorporate the recommendations made in Design Review during module fabrication. The design review will be conducted by HAL along with certification agencies and/or users.

8. PROPOSAL

The proposal shall be submitted in two parts (Technical and Commercial)

Technical proposal shall comprise of the following:

- Point-by-point compliance to technical requirements
- Vendor shall agree/comply for the following.
  a) Vendor shall submit their QMS approval and certification such as AS9100D/ISO9001
  b) Vendor shall provide their Design Approval for Design, Development & Fabrication of Video Interface Cards (VIC1 & VIC2). Vendor shall provide all design files to HAL. HAL has the right to manufacture or reproduce the items.

Commercial proposal shall comprise of the following:

- Design & Development NRE Cost for Video Interface Card (VIC) and it's Test Set Up & Development Station
- Video Interface Card1 (VIC1) with Phase-I interfaces – 5 No's
- Video Interface Card2 (VIC2) with Phase-II interfaces – 3 No's
- VIC Test Set Up & Development Station – 1 No

9. LIST OF DELIVERABLES

The following items shall be delivered by the vendor:

- 1 No of VIC1 followed by 4 No's in Phase-I as per conditions mentioned in this document.
- 3 No's of VIC2 in Phase-II as per conditions mentioned in this document.
- Suite of BSP, Firmware consisting of drivers, communication libraries, Binary files and HDL codes (whichever applicable) and Acceptance Test Software in CD/DVDs.
- One number of VIC Module Test Set Up & Development Station with Semi-Rugged Portable Controller, Cables & Accessories to perform board testing along with necessary softwares and licenses.
- The vendor shall deliver items as per Annexures-1, 2 & 3 checklists along with the files/items (1 set in CD/DVD) wherever appropriate.

10. DELIVERY SCHEDULE

Delivery shall be done in two phases. In Phase-I deliverables shall be delivered in two stages.

T_0: Date of placement of order
T_1: Go ahead for 4 no of VIC1 as per Phase-I Configuration
T_2: Go ahead for 3 no of VIC2 as per Phase-II Configuration

10.1 Phase-I

Stage1: Delivery of 1 no of VIC1 and 1 no of Test Setup. (With in T0+20 weeks)

Stage2: Delivery of 4 no of VIC1. (With in T1+6 weeks)

10.2 Phase-II

Deliverables: Delivery of 3 no of VIC2 (With in T2+16 weeks)

Note1: Go-Ahead for Fabrication of Stage2 VIC1 will be provided by HAL after evaluating Stage1 Deliverables of Phase-I. Vendor shall accommodate the changes in further boards if any suggested by HAL. These changes will be based on evaluation of Stage1 VIC1.

Note2: Go-Ahead for Fabrication of VIC2 will be provided by HAL as per Card Requirement at that time. If there is no requirement of VIC2 for HAL then HAL may ask the vendor not to go for Fabrication of VIC2, however Vendor shall complete the design of VIC2 also in parallel with VIC1.

Note3: T1 shall not cross Acceptance Date of Stage1 VIC1 Cards +16 Weeks. If HAL does not provide go ahead within 16 weeks from Acceptance Date of first VIC1 Card then vendor may consider default go ahead for Fabrication of 4 no of VIC1 for Stage2.

Note4: T2 shall not cross Acceptance Date of Stage2 VIC1 Cards +16 Weeks. If HAL does not provide go ahead within 16 weeks from Acceptance Date of 4 VIC1 Cards then vendor may consider that there is no requirement of Fabrication of VIC2.

11. INTEGRATION

The integration of VIC1 & VIC2 with each other and other modules shall be done at HAL. The vendor shall provide full support during integration and testing activities. During integration/ testing, if any modifications are required in VIC1 & VIC2 hardware and software, the vendor shall be required to make those changes and get them accepted without any additional cost.

12. PACKING

Vendor shall use appropriate packing box to avoid transit damages and provide handling instructions.

13. ACCEPTANCE CRITERIA

The modules & Test Set Up acceptance shall be by HAL Quality Assurance as per mutually agreed Acceptance Test Procedure (ATP) complying with requirements mentioned in this document.
Acceptance shall be given after each milestone as mentioned in this document.

Phase-II deliverables i.e. VIC2 shall be tested along with VIC1 which are delivered in Phase-I.

Applicable documents and reports as mentioned in Annexure-1, 2 & 3 as per milestone shall be delivered.

14. REPEAT ORDER REQUIREMENT (OPTIONAL)

Vendor shall agree for the following items as options:

a. Repeat order for maximum 5 Nos of VIC1 & 3 Nos of VIC2.
b. Repeat Order will be option for HAL, MCSRDC for exercising within 12 months from the date of completion of the original order. (The prices, terms and conditions of the repeat order shall be the same as that of the original without NRE Charges).

15. WARRANTY SUPPORT

Vendor shall comply with 2 year warranty support after the supply & acceptance of boards at HW LAB, MCSRDC. Vendor shall perform replacement of components, repair of boards and test setup during warranty period. The vendor shall incorporate modifications or improvements as necessary during this period. Vendor shall also provide Post Warranty support maintenance and repair of boards at mutually agreed terms and conditions.

Annexure-1: Checklist for Electronic Modules (As per applicability)

S/N.	Documents/Reports for **Electronic Boards** & **Test Setup** if any	Template	Mandatory	Source	Remarks
1.	Technical specification document	HAL	YES	Vendor	
2.	Design Documents/Files		YES	Vendor	
3.	Design drawings	- -	YES	Vendor	
4.	Detailed Hardware Design document	- -	YES	Vendor	
5.	Circuit Schematic diagrams (project along with libraries (symbols, parts, footprints etc.))	- -	YES	Vendor	
6.	BOM,	HAL	YES	Vendor	
7.	Net list,	- -	YES	Vendor	
8.	PCB/ Board file ,	- -	YES	Vendor	
9.	Gerber file,	- -	YES	Vendor	
10.	architecture with Mechanical and Electrical interface details including installation instructions,	- -	YES	Vendor	
11.	PCB layout and pin-out details,	- -	YES	Vendor	
12.	XY coordinate file.	- -	YES	Vendor	
13.	PCB Assembly Drawings	HAL	YES	Vendor	
14.	Detailed Hardware Design Document at circuit level explanation	HAL	YES	Vendor	
15.	Programming, SW and HDL design documents	HAL	YES	Vendor	
16.	Thermal analysis report along with its heat shunt and wedge locks	- -	YES	Vendor	
17.	SI,PI and EMI/EMC report (Whichever is applicable)	- -	YES	Vendor	
18.	Component de-rating analysis report	HAL	YES	Vendor	
19.	Applicable Reliability Reports and Data	- -	YES	Vendor	

S/N.	Documents/Reports for **Electronic Boards** & **Test Setup** if any	Template	Mandatory	Source	Remarks
20.	COC of electronics components including connectors	- -	YES	OEM or Registered Distributer	Chinese/Taiwan Manufacturer are Prohibited
21.	Certificates for PCBs procured from approved sources for IPC Class-2 PCBs along with Raw material certification, Bare Board Testing (BBT) results and acceptance report as per IPC-A-600.	- -	YES	Micropack, Cimulec, Eltek or equivalent manf. Qualified for MIL-PRF.	Qualified for MIL-PRF-55110G/ MIL-PRF-50884E.
22.	Group A and Group B Certificate for Quality Inspection reports of MIL grade PCB.	- -	YES		
23.	Kit Binning before Assembly	HAL	YES	Vendor	This process will be completed in presence of HAL QA and RDAQA(Certification Agency)
24.	Quality certificate for the each assembled card	- -	YES	Smile Electronics, Kaynes Tech, or similar Certified Assy. Manufacturer	ISO Certified
25.	Real Time X-Ray Inspection Report and Optical Inspection Report for the assembled PCBs.	- -	YES		
26.	Assembly report for the each assembled card	- -	YES		

S/N.	Documents/Reports for **Electronic Boards** & **Test Setup** if any	Template	Mandatory	Source	Remarks
27.	Inspection of Assembled board	HAL	YES		This process will be completed in presence of HAL QA and RDAQA(Certification Agency)
28.	Board Bring up document	HAL	YES	Vendor	
29.	ATP and ATR documents	HAL	YES	Vendor	
30.	Declaration of Design and Performance (DDP)	- -	YES	Vendor	
31.	Board Assembly Drawing with Heat sink/shunt, wedge lock, card extractor etc.	- -	YES	Vendor	Inspection Report required
32.	Documents providing details of operating procedure, programming reference manual, maintenance manual, troubleshooting manual including details of test equipment or tools required for this purpose (If Any)	- -	YES	Vendor	Inspection Report required
33.	General				
34.	Storage details.	- -	YES	Vendor	Requirement of Certification Agency
35.	Maintainability aspects	- -	YES	Vendor	
36.	Vendors Quality Assurance procedures and documents	- -	YES	Vendor	
37.	COTS screening tests reports for each MIL grade module.	- -	YES	Vendor	If part of PO. In presence of HAL QA and RDAQA (Certification Agency)

S/N.	Documents/Reports for **Electronic Boards** & **Test Setup** if any	Template	Mandatory	Source	Remarks
38.	Configuration Control document for hardware	- -	YES	Vendor	

Note:
All the above files are to be submitted in pdf/doc/docx format. Applicable CAD files are required to be submitted.
All Hardware and software modifications must be covered by revision of relevant documents and a copy (soft and hard) of the same shall be provided to HAL.
The submitted documents shall be verified by the design team for giving the acceptance. Vendor may discuss the scope of each document with HAL after placement of PO.

Annexure-2: Checklist for Software (As per applicability)

S/N.	Documents/Reports for Software & Firmware	Template	Mandatory	Source	Remarks
1.	Documents related to Software Tools, Compiler & Work Bench GUI	---------	YES	Vendor/ OEM	
2.	Suite of firmware	HAL	YES	Vendor	
3.	Drivers	HAL	YES	Vendor	
4.	Communication Libraries	HAL	YES	Vendor	
5.	Video drivers	HAL	YES	Vendor	
6.	Configuration Control document for software	HAL	YES	Vendor	
7.	Software and HDL design documents	HAL	YES	Vendor	
8.	Software Requirement Specification (SRS)	HAL	YES	Vendor	
9.	Software User Manual for Programming	HAL	YES	Vendor	
10.	Software User Manual for building and porting the application software on target platform	HAL	YES	Vendor	
11.	FPGA/ CPLD binary, Source Code and corresponding program loading documents	HAL	YES	Vendor	

S/N.	Documents/Reports for Software & Firmware	Template	Mandatory	Source	Remarks
12.	Documents related to ATP Software of Board & Tester	HAL	YES	Vendor	
13.	Source Code of ATP Software for Board & Tester	HAL	YES	Vendor	
14.	Documents required for operation of Debugging tool, Software loading facility and UNIT tester.	HAL	YES	Vendor	
15.	Other Documents required for CEH certification by CEMILAC	HAL	YES	Vendor	

Note:

1. All the above files are to be submitted in pdf/doc/docx format. Applicable CAD files are required to be submitted.
2. The configuration, development, porting and testing of firmware on target platform shall be the responsibility of Vendor.

Annexure-3: Checklist for Mechanical Modules (As per applicability)

S/N.	Documents/Reports for Mechanical Parts and accessories	Template	Mandatory	Source	Remarks
1	Technical specification document	HAL	YES	Vendor	
2	Mechanical ICD of Heat Sink	HAL	YES	Vendor	
3	Design Documents/Files				
3.01	*2-D drawings of mechanical parts (in third angle projections)*	- -	YES	Vendor	
3.02	*3-D models of mechanical parts and casing*	- -	YES	Vendor	
3.03	*Overall Module Assembly drawing*	- -	YES	Vendor	
3.04	*Mechanical Parts BOM (Material Schedule-M.S.)*	- -	YES	Vendor	
3.05	*Master Drawing Index*	HAL	YES	Vendor	
3.06	*Thermal Analysis Report*	- -	YES	Vendor	With Licensed Tool used for these
3.07	*Stress Analysis Report*	- -	YES	Vendor	

S/N.	Documents/Reports for Mechanical Parts and accessories	Template	Mandatory	Source	Remarks
3.08	*Vibration Analysis Report*	- -	YES	Vendor	analysis
4	Fasteners				
4.01	*Screws (Pan Head/CSK)*		YES	LPS Bossard	COC Required
4.03	*Helicoil*		YES	LPS Bossard/Nag Fastman or similar Aerospace STD.	COC Required
4.04	*Washer (Flat/Spring)*		YES	LPS Bossard	COC Required
4.05	*Nut & Bolt*		YES	LPS Bossard	COC Required
4.06	*Spacer (Hex Nut or similar)*		YES	LPS Bossard	COC Required
6	Thermal Pad or paste (MIL Grade)	- -	YES	Fujipoly/Parker Chomerics	COC Required
9	Reports	- -	YES	Vendor	
9.01	***Al 6061*** *Material Report for MIL grade Aluminium material*	- -	YES	Vendor	
9.02	*Anodisation*	- -	YES	Vendor	AS PER MIL-A-8625F,TYPE II,CLASS 2 (BLACK)
9.03	*Chromatisation(alochrome)*	- -	YES	Vendor	As per HAL-PI-3014 or MIL-DTL-5541F,TYPE1, CLASS 4
9.04	*Powder Coating*	- -	YES	Vendor	As per HAL-PI-3061 or IS-13871 Grade B/C
9.05	***AISI 304*** *Material Report for MIL grade stainless steel material*	- -	YES	Vendor	
9.06	*Passivation report of stainless steel parts*	- -	YES	Vendor	

S/N.	Documents/Reports for Mechanical Parts and accessories	Template	Mandatory	Source	Remarks
9.07	*QC Inspection Report for Fabricated mechanical Parts and chassis*	- -	YES	Vendor	
9.08	***NDT015** test report of the fabricated Mechanical Parts*	- -	YES	Vendor	
9.1	Aluminium Sheet metal Report or COC	- -	YES	Vendor	
12	Mechanical components including connectors, cables etc.	- -	YES	OEM or Registered Distributer	**Chinese/Taiwan** Manufacturer are **Prohibited**
12.01	Wedge Lock with screw	- -	YES	Birtcher/Wakefield/ CallMarks	COC Required
12.02	Card Extractor with rivet	- -	YES	Birtcher/Wakefield/ CallMarks	COC Required

Note:

1. All the above files are to be submitted in pdf/doc/docx format. Applicable CAD files are required to be submitted.
2. The configuration, development, porting and testing of firmware on target platform shall be the responsibility of Vendor.