SLAC–PUB–5179
March 1990
(A)

CAVITY COMBINER FOR *S*-BAND SOLID-STATE AMPLIFIER FOR THE HIGH-POWER KLYSTRON AT SLAC*

Yuji Otake,[a] Jim Judkins, and Heinz Schwarz

Stanford Linear Accelerator Center
Stanford University, Stanford, CA 94309, USA

Abstract

Design and construction of a cavity-type combiner is described to be used in combining output power of pulsed transistor amplifier modules at *S*-band. A four-way TM_{010} mode cavity power combiner achieved a transmission loss of less than 0.2 dB.

Submitted for publication.

* Work supported by Department of Energy contract DE–AC03–76SF00515.

[a] Permanent address: KEK National Laboratory for High Energy Physics, 1–1 Oho, Tukuba-shi, Ibaraki-ken, 305, Japan.

1. Introduction

Megawatt klystrons used with linear accelerators at *S*-band require pulsed drive power levels of up to 1 kW. Power levels like this can be achieved by combining the output of a number of transistor amplifier modules. Low loss combining networks are desirable for this application.

It was chosen to investigate a cavity-type combiner because its contribution to the loss is a free parameter. A circular TM_{010} mode cavity design was selected since it can be easily calculated, and fabrication is simple. Electrical coupling antennas were chosen for their adjustability.

The theoretical parameter relationship is shown; the cavity parameters are calculated. Two cavity combiners were built with the desired coupling factors established empirically. Final insertion loss measurements were made.

2. Resonant Frequency of the TM_{010} Mode Cavity

The first step in designing a TM_{010} mode cavity[1] is to determine the diameter a which determines the resonant frequency f_0. The following equation relates resonant frequency to dimension a for a TM_{npq} mode cavity:

$$f_0 = \frac{1}{2\pi\sqrt{\varepsilon\mu}}\sqrt{\frac{X_{np}}{a} + \frac{q\pi}{r}} \quad ,$$

where μ = magnetic permeability; X_{np} = Bessel function; q = harmonic number in the cavity height direction; d = cavity height; ε = dielectric constant; and a = cavity diameter.

In the TM_{010} mode cavity, the q value must be substituted by zero. Then the equation becomes:

$$f_0 = \frac{1}{2\pi\sqrt{\varepsilon\mu}}\left(\frac{X_{01}}{a}\right) .$$

A dimension of a = 8.0357 cm was calculated for f_0 = 2856 MHz; x_{01} = 2.405.

3. Coupling Relationships of the Cavity Combiner

The power loss in the cavity walls should be as small as possible and for this design is set to about 1%. If 99% RF power is withdrawn from the cavity at the center probe, the coupling factor (ß) of the center probe (output) is:

$$ß_c = 99 \quad .$$

Relationships[2] of ß, Q_L, Q_{ext}, and Q_o among probes in the four-way cavity-type combiner are:

$$ß_c = ß_1 + ß_2 + ß_3 + ß_4 \ , \qquad ß_1 / ß_c = 1/4 \ ,$$

$$1/Q_{extc} = 1/Q_{ext1} + 1/Q_{ext2} + 1/Q_{ext3} + 1/Q_{ext4} \ ,$$

and

$$Q_{extc} = Q_o/ß_c \ ,$$

where $ß_c$: = coupling factor of the center probe; $ß_{1\text{-}4}$ = coupling factors of the four peripheral probes; Q_o = unloaded Q (quality factor); Q_{extc} = external Q value of the center probe; and $Q_{ext1\text{-}4}$ = external Q value of the individual peripheral probe.

The center probe will be critically coupled when the four peripheral probes are terminated in 50 ohm. The relationship between Q_L and Q_{ext} is:

$$1/Q_L = 1/Q_0 + 1/Q_{extc} + 1/Q_{ext1} + 1/Q_{ext2} + 1/Q_{ext3} + 1/Q_{ext4} \quad .$$

where Q_L = loaded Q value of the cavity with all probes.

4. Theoretical and Measured Q_0 Value of a TM_{010} Cavity at 2856 MHz

An aluminum test cavity was made to measure $Q_{0,,}$ as shown in Fig. 2. The mechanical tolerances are ±0.005 inches except for the diameter which is ±0.002 inches. The cavity has one probe coupling to the electric field. The probe length is 3 mm made out of 0.7 mm copper wire. At first, the predicted Q_0 value was calculated by the following equation[3] for the TM_{010} mode cavity.

$$1/Q_0 = [(1/a) + (2/d)]\,\delta \qquad \delta = \text{Skin depth.}$$

The calculated Q_0 value for an aluminum cavity is approximately 8000. The Q circle method[2] for measuring Q_0 yielded a value of 5622. This result is shown in Fig. 3. The reduction of Q_0 can be attributed to contact losses between the top and bottom plates and the cylinder.

5. Determining $ß_c$ and $ß_1$–$ß_4$

The required coupling factors of the peripheral probes and the center probes for the cavity combiner are:

$$ß_1 – ß_4 = 25 \quad , \qquad ß_c = 100 \quad , \qquad \text{at } 2856 \text{ MHz} \quad .$$

$$ß_1 - ß_4 = 25 \quad , \qquad ß_c = 100 \quad , \qquad \text{at } 2856 \text{ MHz} \quad .$$

The probes were adjusted empirically one at a time with no other probe installed. The Q_L measurement was used to measure the coupling factor, ß. A frequency and ß dependence to probe length is shown in Figs. 4 and 5. From Figs. 4 and 5, the initial lengths of the probes can be determined:

Center Probe:	19.8 mm
Probes 1–4:	14.0 mm

Next, all the probes were assembled into the cavity as shown in Fig. 6. The measurement setup for the combiner situation is shown in Fig. 7. The combiner requires the center probe to be critically coupled. Therefore with the four peripheral probes terminated into 50 Ω, the length of the center probe was trimmed for critical coupling. The length of the peripheral probes also were trimmed to compensate for field distortions caused by the probes and to adjust the power divide ratio between the center and the peripherals.

The final probe lengths:

Center probe:	12.9 mm
Probes 1–4:	13.5 mm

6. Frequency Adjustment of the Loaded TM_{010} Mode Combiner Cavity

Installing all the probes lowered the cavity frequency to 2639 MHz. The diameter of the cylinder has to be reduced to adjust the frequency back to 2856 MHz. A linear approximation worked well in calculating the adjustment:

$$2856 \text{ MHz}/2639 \text{ MHz} = r/r' \quad ,$$

where r = cavity diameter before adjustment and r' is the new cavity diameter.

A concentric cylinder was made to fit inside the original cavity to reduce the diameter to the new value r'.

A second iteration of probe length trimming was necessary for the new cavity dimensions. The results of measurements from the center prove to the peripheral probes are shown in Fig. 8 and Table 1.

7. Measurement Results of a Two-Cavity Divider/Combiner

To accurately measure the insertion loss of the combiner, a second combiner was constructed and used as a divider. Two combiners were connected with SMA barrels as shown in Fig. 9. The data for the two combiners is shown in Table 2. The frequency response and insertion loss are shown in Fig. 10. The total loss of 0.33 dB, including the interconnections between cavities, was measured. Therefore knowing the insertion loss of the SMA connectors, one can predict the insertion loss of one cavity to be less than 0.16 dB. The flat transmission characteristic can be attributed to the cavities being at slightly different frequencies (i.e., staggered tuned).

8. Conclusion

The TM_{010} mode cavity combiner has been successfully constructed with an insertion loss of less than 0.16 dB.

The results indicate that the cavity-type combiner is very efficient and in this aspect superior to other power combining methods. The isolation between probes is over 11 dB. This should be sufficient for the application. The most important point for tuning the cavity is to maintain the relationship between the center probe coupling and the peripheral probe coupling. For a four-way combiner the ratio is $ß_1/ß_c=1/4$. After adjusting the probe lengths for this ratio, the frequency can be adjusted. This is followed by a minor adjustment of the probe length.

This design approach can be used to build combiners with more combining ports, in which case the isolation will improve and the insertion loss should stay constant.

Acknowledgment

We appreciate Greg Dalit's help in fabrication of the cavity, and Osamu Azume's help in calculating the cavity.

References

1. Samuel Y. Liao, "Microwave Circuit Analysis and Amplifier Design" (Prentice-Hall Inc., New York, 1987).
2. Edward L. Ginzton, "Microwave Measurements" (McGraw-Hill, New York, 1957).
3. Kazuo Fujisawa, "Microwave Circuit" (Corona Publishing Co. Ltd., Japan, 1980).

Table Captions

1. Test data of the cavity-type combiner-1.
2. Comparison between the combiner-1 and the combiner-2.

Probe Number	Transmission Loss (S21) (Center to Peripheral Probe)	Reflection Loss (S11)	Isolation (Between Probe-1 and each Probe-1, -2, -3, and -4)
Probe-1	–6.07 dB		
Probe-2	–6.16 dB		–11.92 dB
Probe-3	–6.16 dB		–11.88 dB
Probe-4	–6.355 dB		–12.27 dB
Center probe		–38.4 dB	
	Total insertion loss of combiner cavity-1		
	0.1635 dB		

Table 1.

	Combiner-1	Combiner-2
Resonant frequency	2854.00 MHz	2856.22 MHz
Q_L	30	22.53
$ß_{all}$	0.9864	1.017
Center probe length	12.98 mm	11.40 mm
Probe-1 length	13.51 mm	11.79 mm

Table 2.

Figure Captions

1. Cylindrical cavity.
2. TM_{010} mode test cavity for Q_0 measurement.
3. Measurement of Q_0 of the test cavity.
4. f_0 and ß vs. the antenna length at the center probe of the test cavity.
5. f_0 and ß vs. the antenna length at the peripheral probe of the test cavity.
6. The TM_{010} mode cavity-type combiner.
7. The measurement of Q_L and $ß_c$ of the cavity combiner.
8. The measurement result of the power dividing ratio between the center and the peripheral probe of the cavity combiner.
9. The insertion loss measurement assembly of the cavity combiner.
10. (a) The measurement result of the insertion loss of the combiner/divider assembly including SMA barrel connectors. (b) The measurement result of the reflection loss of the combiner/divider assembly.

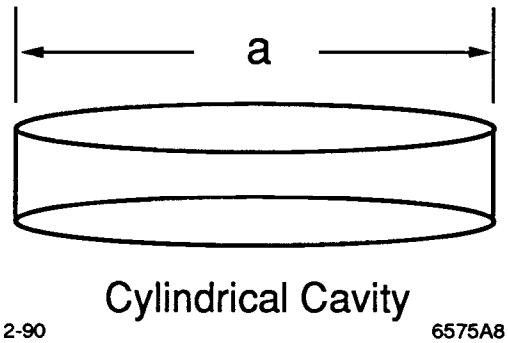

Fig. 1

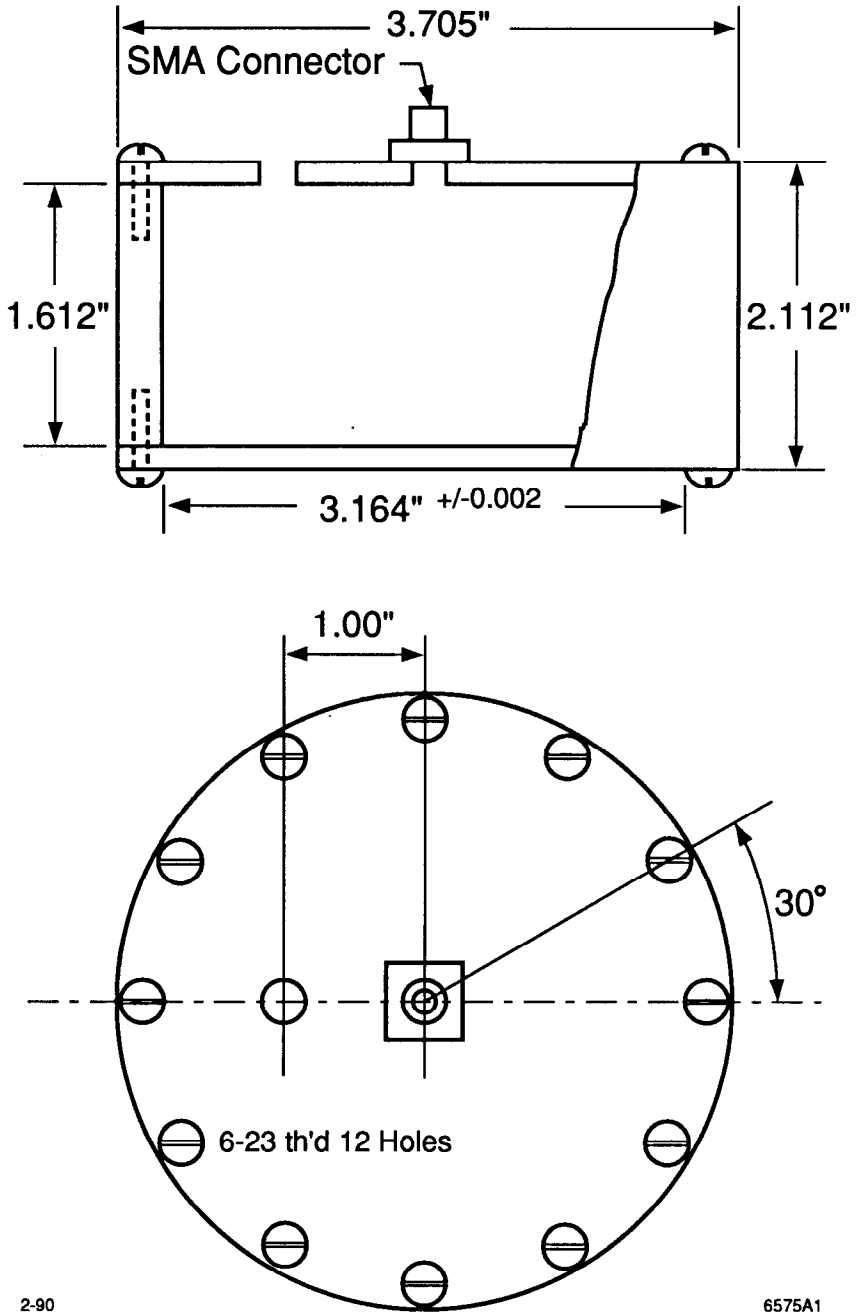
3.705"
SMA Connector
1.612"
2.112"
3.164" +/-0.002
1.00"
30°
6-23 th'd 12 Holes
2-90
6575A1

Fig. 2

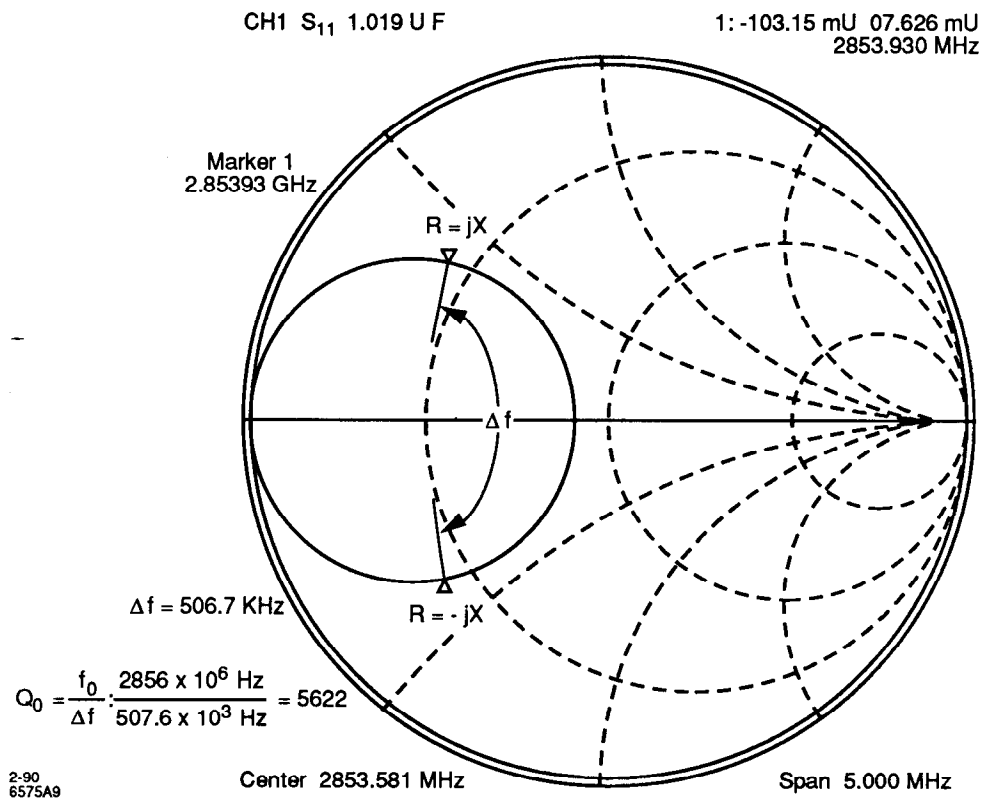
CH1 S_{11} 1.019 U F
1: -103.15 mU 07.626 mU
2853.930 MHz
Marker 1
2.85393 GHz
R = jX
Δf
Δf = 506.7 KHz
R = - jX
$Q_0 = \frac{f_0}{\Delta f} : \frac{2856 \times 10^6 \text{ Hz}}{507.6 \times 10^3 \text{ Hz}} = 5622$
2-90
6575A9
Center 2853.581 MHz
Span 5.000 MHz

Fig. 3

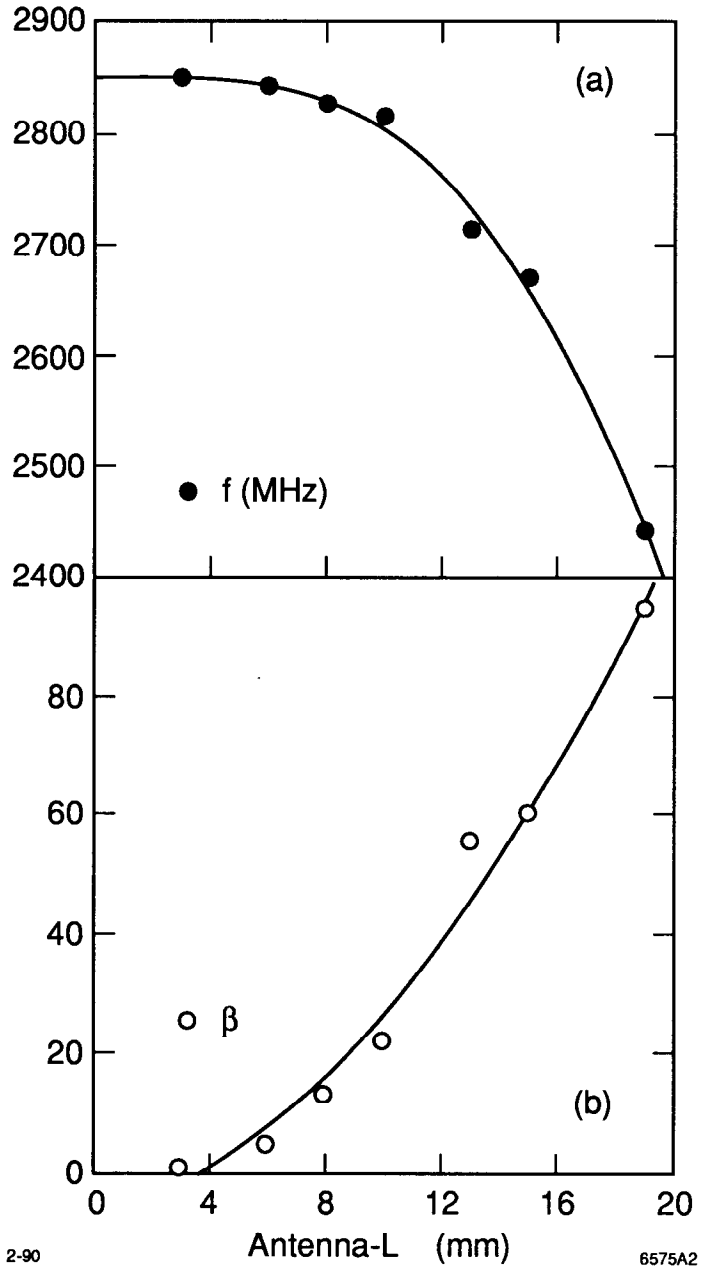
2900
2800
2700
2600
2500
2400
(a)
f (MHz)
80
60
40
20
0
β
(b)
0
4
8
12
16
20
Antenna-L (mm)
2-90
6575A2

Fig. 4

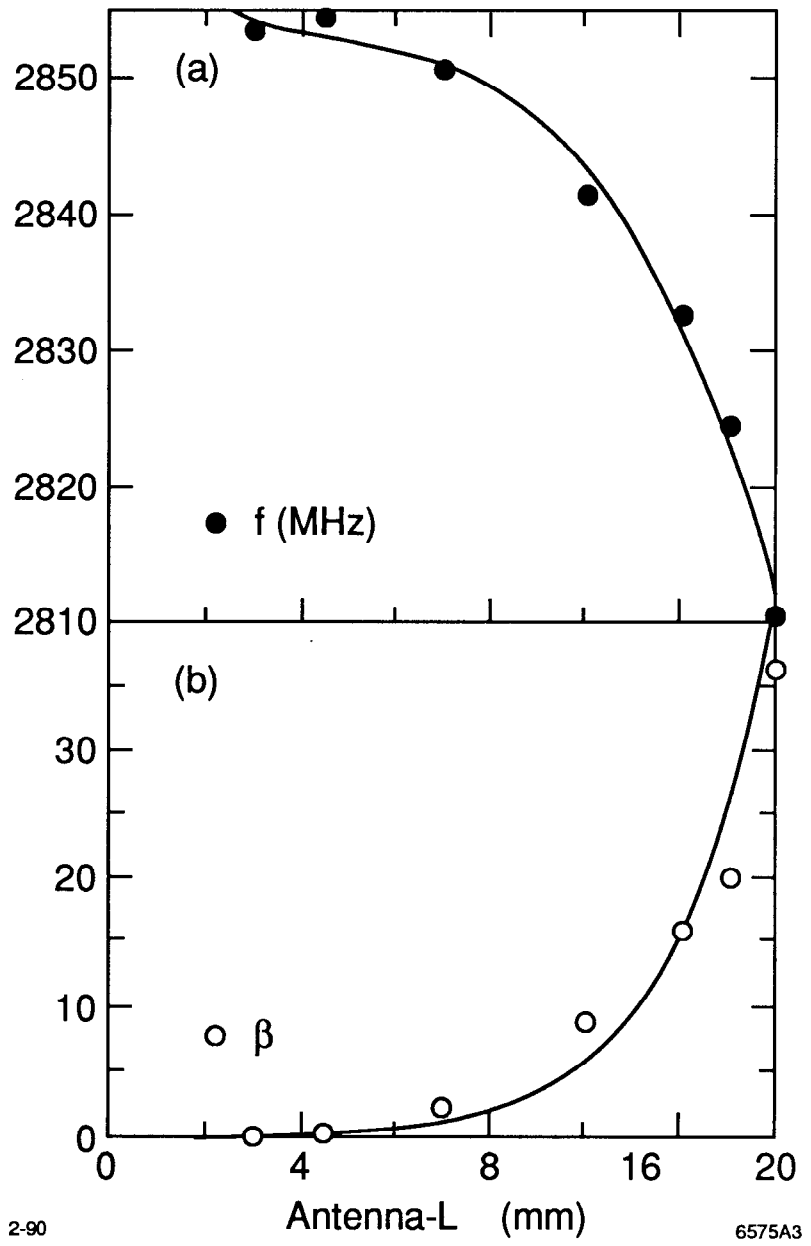
(a)
2850
2840
2830
2820
2810
f (MHz)
(b)
30
20
10
0
β
0
4
8
16
20
Antenna-L (mm)
2-90
6575A3

Fig. 5

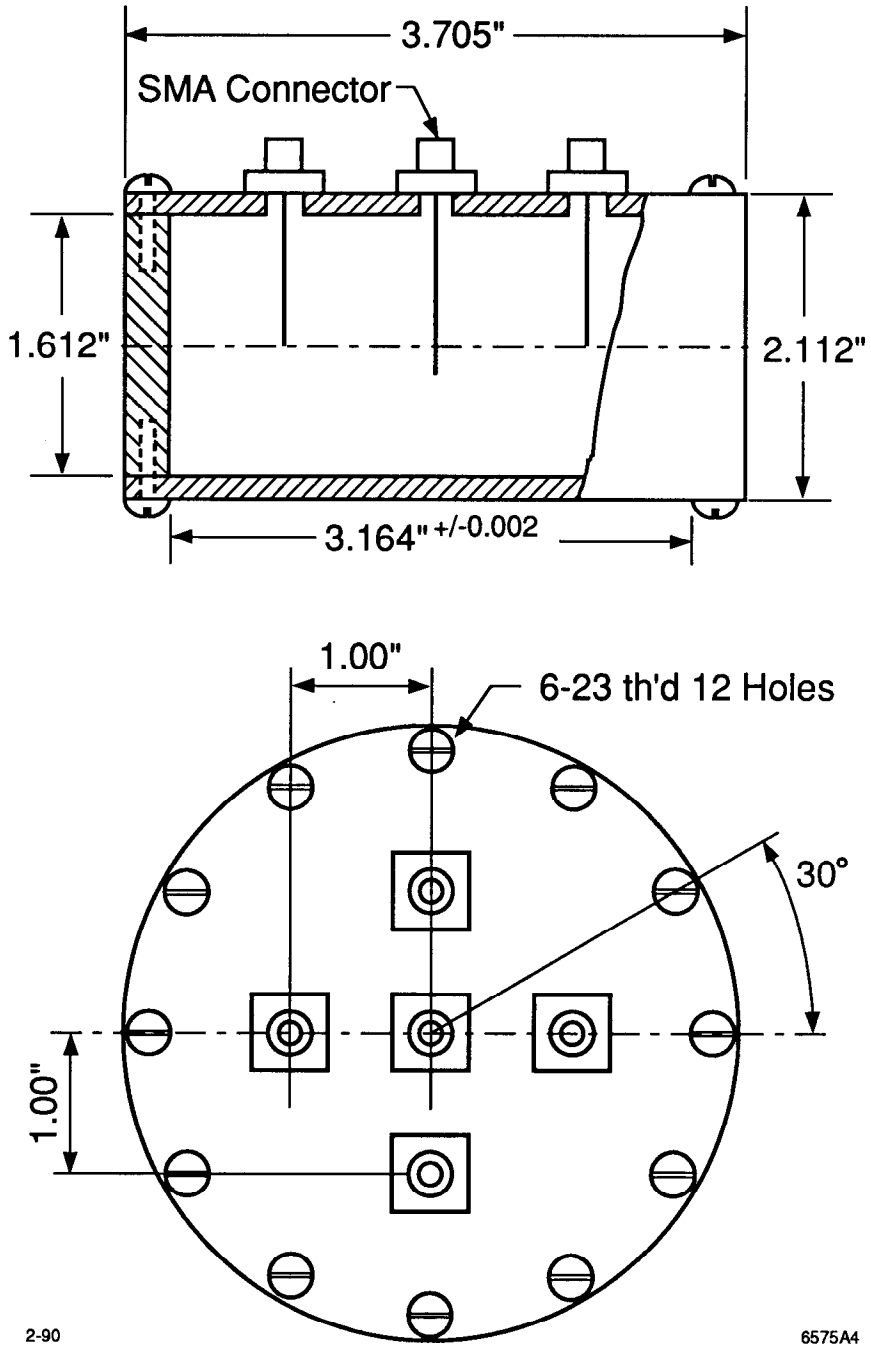
3.705"
SMA Connector
1.612"
2.112"
3.164" +/-0.002
1.00"
6-23 th'd 12 Holes
30°
1.00"
2-90
6575A4

Fig. 6

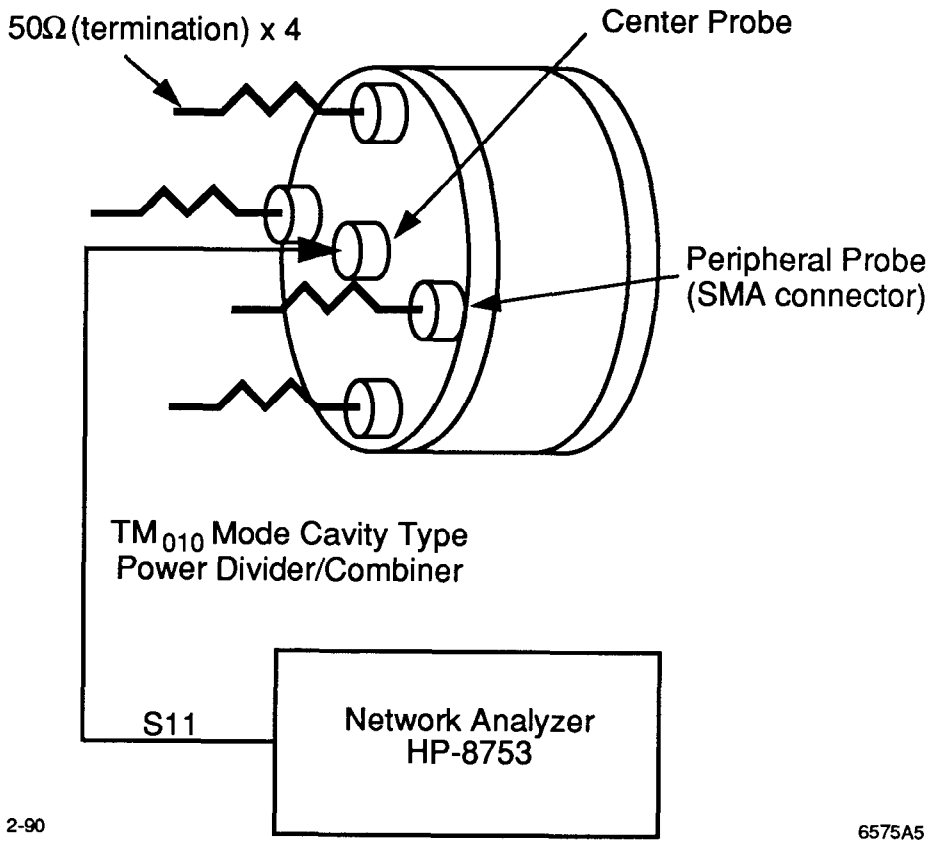
50Ω (termination) x 4
Center Probe
Peripheral Probe
(SMA connector)
TM010 Mode Cavity Type
Power Divider/Combiner
S11
Network Analyzer
HP-8753
2-90
6575A5

Fig. 7

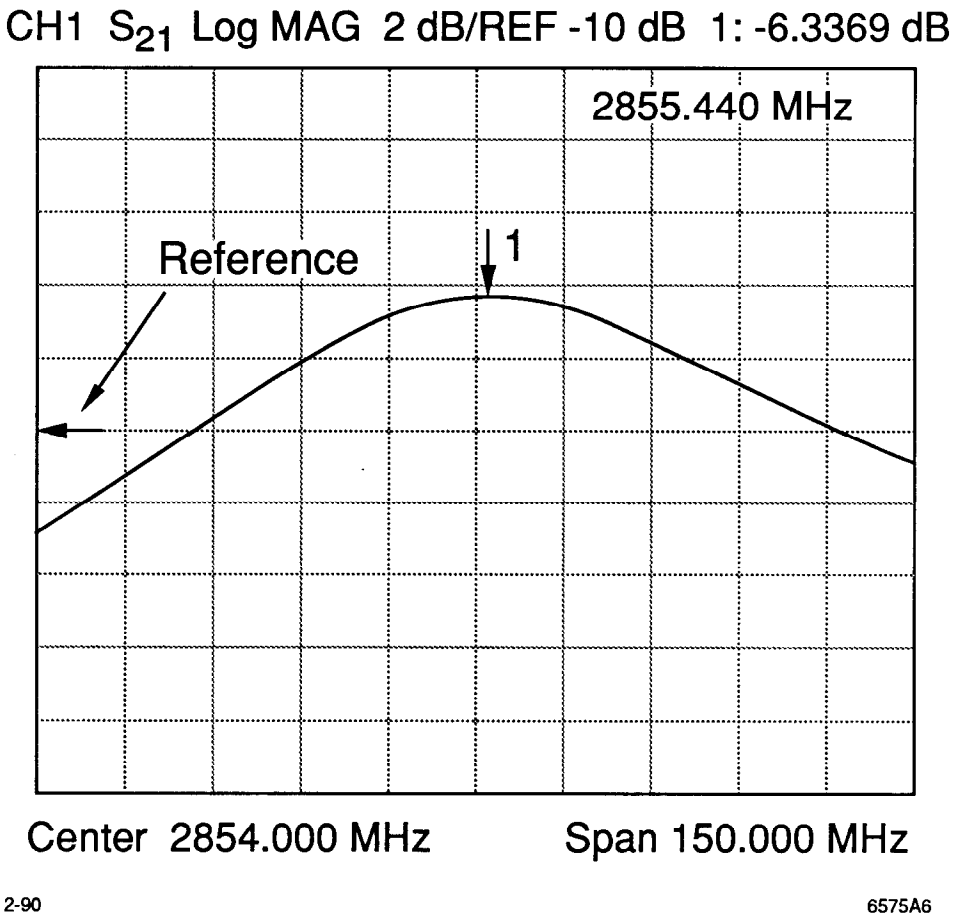
CH1 S_{21} Log MAG 2 dB/REF -10 dB 1: -6.3369 dB
2855.440 MHz
Reference
1
Center 2854.000 MHz
Span 150.000 MHz
2-90
6575A6

Fig. 8

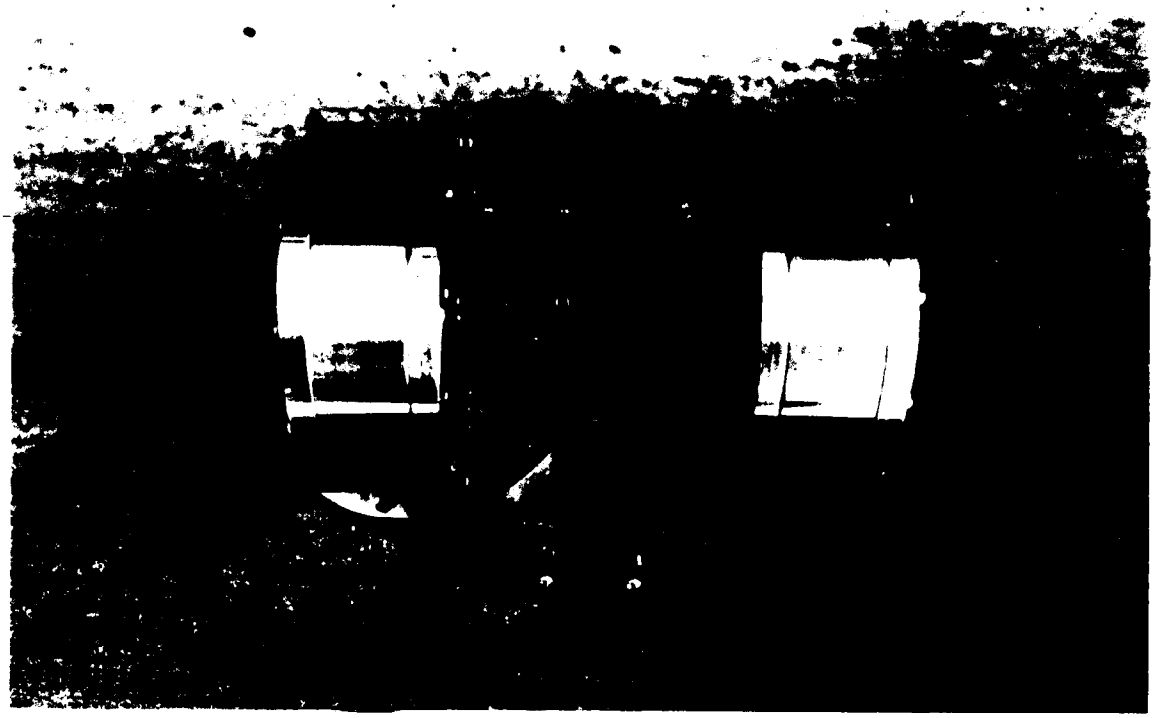

3-90

6575A10

Fig. 9

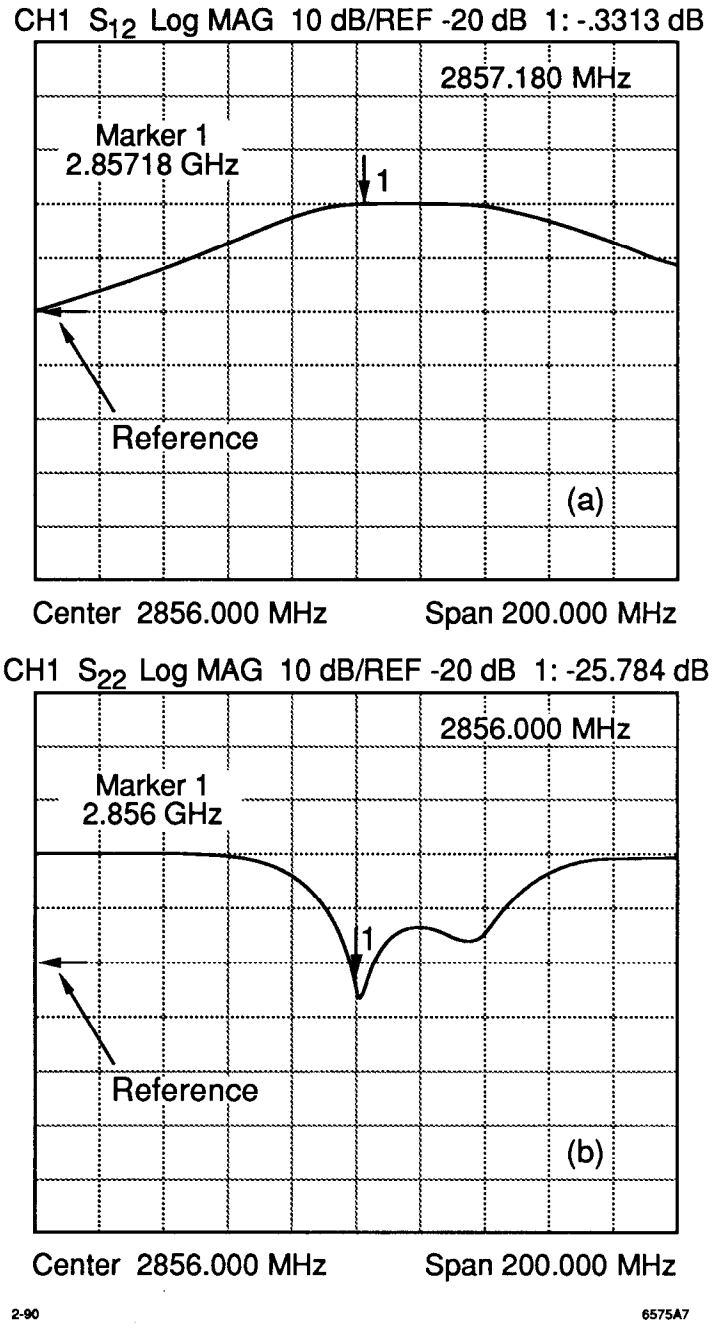
CH1 S12 Log MAG 10 dB/REF -20 dB 1: -.3313 dB
2857.180 MHz
Marker 1
2.85718 GHz
1
Reference
(a)
Center 2856.000 MHz
Span 200.000 MHz
CH1 S22 Log MAG 10 dB/REF -20 dB 1: -25.784 dB
2856.000 MHz
Marker 1
2.856 GHz
1
Reference
(b)
Center 2856.000 MHz
Span 200.000 MHz
2-90
6575A7

Fig. 10