SC_r Oil Free Compressor

Installation, Operation, & Maintenance Manual

V2.13

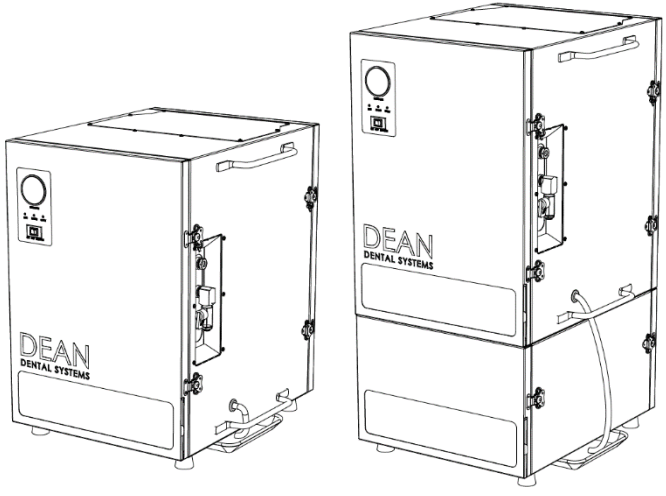

DEAN®
DENTAL SYSTEMS
by A-dec

Copyright

© 2020 A-dec Inc. All rights reserved.

A-dec Inc. makes no warranty of any kind with regard to this material, including, but not limited to, the implied warranties of merchantability and fitness for a particular purpose. A-dec Inc. shall not be held liable for any errors contained herein or any consequential or other damages concerning the furnishing, performance or use of this material. The information in this document is subject to change without notice. If you find any problems in the documentation, please report them to us in writing. A-dec Inc. does not warrant that this document is error-free.

No part of this document may be copied, reproduced, altered, or transmitted in any form or by any means, electronic or mechanical, including photocopying, recording, or by any information storage and retrieval system, without prior written permission from A-dec Inc.

Trademarks and Additional Intellectual Property Rights

A-dec, the A-dec logo, A-dec Inspire, Cascade, Century Plus, Continental, Decade, ICX, ICV, Performer, Preference, Preference Collection, Preference ICC, Radius, and reliablecreativesolutions are trademarks of A-dec Inc. and are registered in the United States and other countries. A-dec 500, A-dec 400, A-dec 300, A-dec 200, and EasyFlex are also trademarks of A-dec Inc. None of the trademarks or trade names in this document may be reproduced, copied, or manipulated in any manner without the express, written approval of the trademark owner.

Certain touchpad symbols and icons are proprietary to A-dec Inc. Any use of these symbols or icons, in whole or in part, without the express written consent of A-dec Inc., is strictly prohibited.

Regulatory Information and Warranty

For required regulatory information and the A-dec warranty, see the *Regulatory Information, Specifications, and Warranty* document (p/n 86.0221.00) available in the Resource Center at www.a-dec.com.

Product Service

Product service is available through your local authorized A-dec dealer. For service information, or to locate an authorized dealer, contact A-dec at 1.800.547.1883 in the USA and Canada or 1.503.538.7478 worldwide, or visit www.a-dec.com.

1. SAFETY AND OPERATION PRECAUTIONS (FOR USER)

Because an air compressor is a piece of machinery with moving and rotating parts, the same precautions should be observed as with any piece of machinery of this type where carelessness in operation or maintenance is hazardous to personnel. In addition to the many obvious safety rules that should be followed with this type of machinery, the additional safety precautions listed below must be observed:

1. Read all instructions completely before operating air compressor or unit.
2. For installation, follow all local electrical and safety codes, as well as the National Electrical Code (NEC) and the Occupational Safety and Health Act (OSHA).
3. Protect the power cable from coming into contact with sharp objects. Do not kink power cable and never allow the cable to come in contact with oil, grease, hot surfaces, or chemicals.
4. Make certain that the power source conforms to the requirements of your equipment.
5. Pull main electrical disconnect switch and disconnect any separate control lines, if used, before attempting to work or perform maintenance on the air compressor or unit. "Tag Out" or "Lock Out" all power sources.
6. Do not attempt to remove any compressor parts without first relieving the entire system of pressure.
7. Do not attempt to service any part while machine is in an operational mode.
8. Do not operate the compressor at pressures in excess of its rating.
9. Periodically check all safety devices for proper operation. Do not change pressure setting or restrict operation.
10. Be sure no tools, rags, or loose parts are left on the compressor or drive parts.
11. Do not use flammable solvents for cleaning the air inlet filter, element or any other parts.
12. Exercise cleanliness during maintenance and when making repairs. Keep dirt away from parts by covering parts and exposed openings with clean cloth or Kraft paper.
13. Do not operate the compressor without doors in place.
14. Do not operate compressor in areas where there is a possibility of ingesting flammable or toxic fumes.

15. Be careful when touching the exterior of a recently run motor - it may be hot enough to be painful or cause injury. With modern motors this condition is normal if operated at rated load as modern motors are built to operate at higher temperatures.
16. Inspect unit daily to observe and correct any unsafe operating condition.
17. Do not "play around" with compressed air, nor direct air stream at body, because this can cause injuries.
18. Compressed air from this machine must not, under any circumstances, be used for food processing or breathing air without adequate downstream filters, purifiers, and controls.
19. Always use an air pressure regulating device at the point of use. Do not use air pressure greater than marked maximum pressure of attachment.
20. Check hoses for weak or worn condition before each use, and make certain that all connections are secure.

The user of any air compressor package manufactured by Dean Dental Systems is hereby warned that failure to follow the preceding Safety and Operation Precautions can result in injuries or equipment damage. However, Dean Dental Systems does not state as fact or does not mean to imply that the preceding list of Safety and Operating Precautions is all inclusive, and further that the observance of this list will prevent all injuries or equipment damage.

2. SYSTEM ENVIRONMENTAL CONDITIONS (ALL SYSTEMS)

- Operating Temperature 40 to 104°F at 50% duty cycle
- Storage and Transport Temperature 32 to 158°F or 0 to 70°C
- Operating Relative Humidity 80%, no condensation
- Storage and Transport Relative Humidity 90%, no condensation
- This Equipment is designed and built to minimize electromagnetic interference with other devices. However, if interference is noticed between another device and these units, remove interfering device from room or Increase separation between vacuum and interfering device.

3. WARRANTY STATEMENT

Dean Dental Systems warrants the Products (except for optional items and accessories which are not covered by any warranty whatsoever) to be free from any defects in material and workmanship, and to comply with the published specifications for 5 Years* from the date of customer's invoice (the "Warranty Period"). If the invoice date is not readily available from the customer or distributor, the warranty period will start with the delivery date to the distributor.

In the event of a product failure, determined by the manufacturer to be under warranty, the needed parts will be provided to the distributor through the manufacturers repair and/or replacement policy.

*SC Model Compressors carry a 5 year/4000 hour, whichever comes first, warranty on major components of Frame, Motors/Pumps, Dryer, and PC board. All other compressor components are 24 months.

The warranty herein contained does not cover defects in the Products resulting from abnormal and abusive wear and tear or Products which have been modified without Dean Dental Systems approval, use of parts that have not been provided by Dean Dental Systems, Products which have not been installed in strict conformity to Dean Dental System's directions or which have been subjected to force majeure, electrical or other abuse, or damaged by improper handling, storage or use by the Distributor, the Distributor's customers or any other third parties. Warranty coverage requires purchase and installation of genuine OEM parts according to the service intervals as determined by the manufacturer.

The Dean Dental Systems warranty applies to the first purchaser and is non-transferable to any second party. Dean Dental Systems makes no warranty, guarantees or representations with respect to the Products covered hereby, express or implied, including, but not limited to, any warranty of merchantability, fitness for a particular purpose, design or suitability with respect to the Products or any other goods, services or other materials provided by Dean Dental Systems. Dean Dental Systems shall not be held liable for any incidental damages, including but not limited to loss of profit resulting from product down time, loss of use, employee or third party service costs, as a result of a part or product failure.

4. DESCRIPTION OF OPERATION (FOR USER)

The SC compressor system is comprised of multiple compressor heads, an electronic controller with solid state components, an air cooled aftercooler, an Air Dryer with integrated filters, and a proprietary filtered and forced air cooling system.

The Compressed Air Path:
Outside ambient Air is drawn in through the recommended fresh air intake, through a 5 micron filter, then enters the compressor head where oil less pistons compress the air from ambient to operating pressure. The now hot, saturated compressed air is transferred through a flexible hose to an aluminum aftercooler reducing the temperature to within 10°F of ambient. The cooled and moisture laden compressed air travels to the combination twin tower regenerative dryer, moisture separator, filter where liquid water is removed and expelled, particulates are captured to .01 micron, and the air is dried by passing over desiccant then enters the aluminum air tank.

The Cooling Air Path:
The entire exterior enclosure permits the forced air cooling of the compressors and aftercooler. The enclosure is divided into 3 zones. The front 1/2 is zone 1, the area containing the compressors is zone 2, the aftercooler and air exhaust is zone 3. Ambient air is drawn through a particulate filter into zone 1. The cooling fan forces air into zone 2. High Temperature air is collected and expelled from zone 3.

Condensate/Moisture Path:
The Air Cooled Aftercooler reduces the compressed air temperature causing condensation. Liquid condensate is passed from the aftercooler into the moisture separator. A solenoid valve on a variable cycle discharges the condensate under pressure.

5. SYMBOLS (FOR USER)

SYMBOL	Location	Explanation
L1	Main Control Board	Line 1 (HOT) of 240 V~ Power
L2	Main Control Board	Line 2 (HOT) of 240 V~ Power
N	Main Control Board	Neutral
G	Main Control Board	Earth Ground of Main Control Board
	Case Interior	Protective Earth (ground)
	Exterior	Identifies Components related to the air discharge

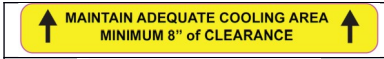	Exterior – Enclosure top Rear	Maintain Adequate Cooling Area
	Exterior – Power Cable	Wiring Instructions
	Exterior	Drain Routing Instructions
	Interior Control Panel	Control Access (Qualified Personnel Only)
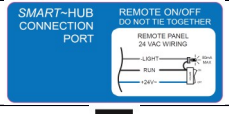	Exterior	Remote Connection Details
	Exterior Packaging	Fragile
	Exterior Packaging	This Side Up
	Exterior Packaging	Do Not Stack

	Exterior Packaging	Shield from rain
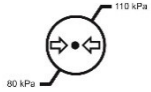	Exterior Packaging	Storage and Transport Atmospheric pressure 80 kPa – 110 kPa
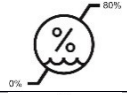	Exterior Packaging	Storage and Transport Relative Humidity 90%, no condensation
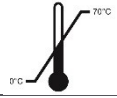	Exterior Packaging	Storage and Transport Temperature 32 to 158°F or 0 to 70°C

6. SIZING INFORMATION / SPECIFICATIONS (FOR USER)

Performance ratings are at 80°F, 0 FASL, and 68%RH. For installations above 3000'FASL, Use next size larger compressor.

			SC 3	SC 5	SC 7	SC 10	SC 12
Operation	Number of Users		1 - 3	3 - 5	5 - 7	7 - 10	10 - 12
	Maximum Air Flow [1]		6.4 cfm	10.0 cfm	13.7 cfm	17 cfm	18.4 cfm
	Pressure	Operational Setting [2]	80 -100 psi	80-100 psi	80-100 psi	80-100 psi	80-100 psi
		Maximum	110 psi	110 psi	110 psi	110 psi	110 psi
Electrical	Electrical	Voltage [3]	120/208/240 V~;3W+PE +/-10%				
		Phases / Frequency	1 Ph / 60 Hz	1 Ph / 60 Hz	1 Ph / 60 Hz	1 Ph / 60 Hz	1 Ph / 60 Hz
	Power Usage	hp	1.75 hp	2.5 hp	3.5 hp	4.5 hp	5.25 hp
		kW	1.3 kW	2.0 kW	2.6 kW	3.3 kW	4.0 kW
		Average Usage	3 amps	5 amps	6 amps	8 amps	8 amps
	Amperage	Full Load Amps (at voltage)	13/7/6	18/8/7	23/13/11	29/18/15	35/20/18
		Min Circuit Breaker Rating	15 amps	20 amps	20 amps	30 amps	30 amps
	Minimum Wire Gauge (AWG)		#14	#12	#10	#10	#10
	Air Line Connection		Includes 6 ft hose with ½" NPT (m) connection				

7. COMPONENT DIAGRAM (FOR USER)

1. Front

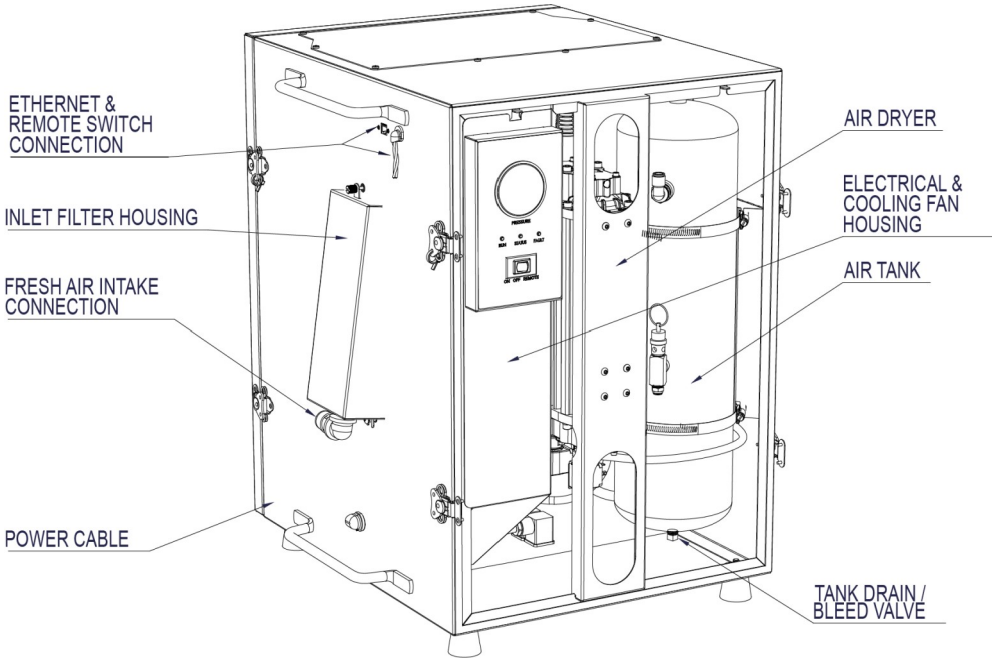

2. Rear

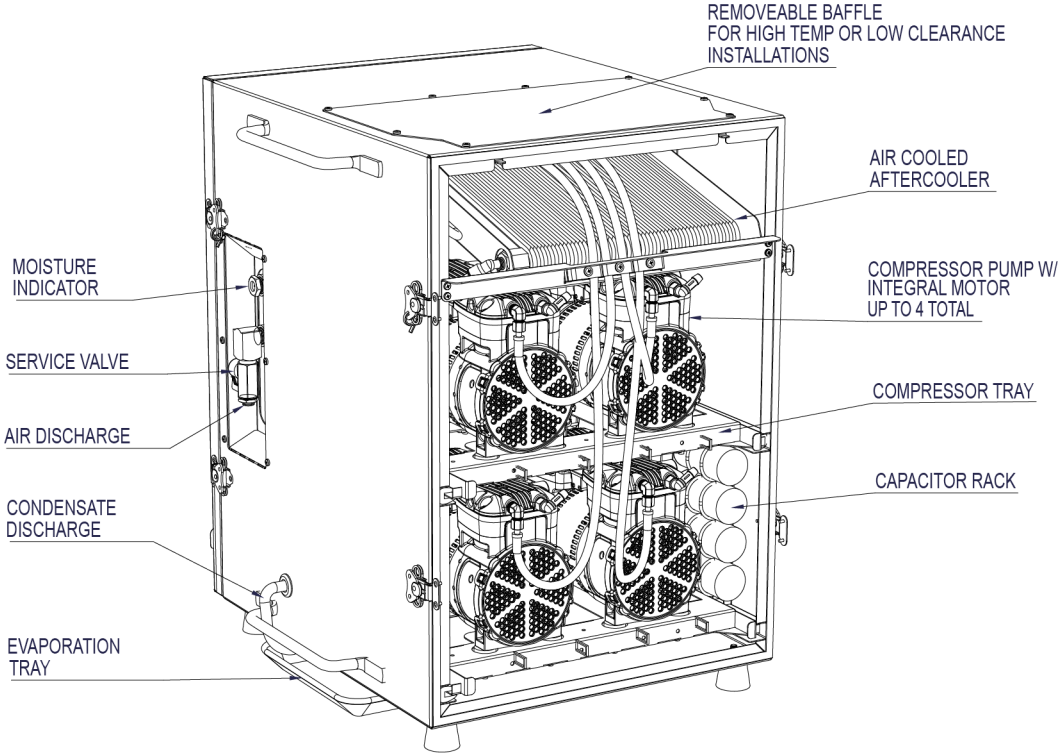
REMOVEABLE BAFFLE
FOR HIGH TEMP OR LOW CLEARANCE
INSTALLATIONS
AIR COOLED
AFTERCOOLER
MOISTURE
INDICATOR
COMPRESSOR PUMP W/
INTEGRAL MOTOR
UP TO 4 TOTAL
SERVICE VALVE
COMPRESSOR TRAY
AIR DISCHARGE
CAPACITOR RACK
CONDENSATE
DISCHARGE
EVAPORATION
TRAY

8. SYSTEM DIAGRAM (FOR USER)

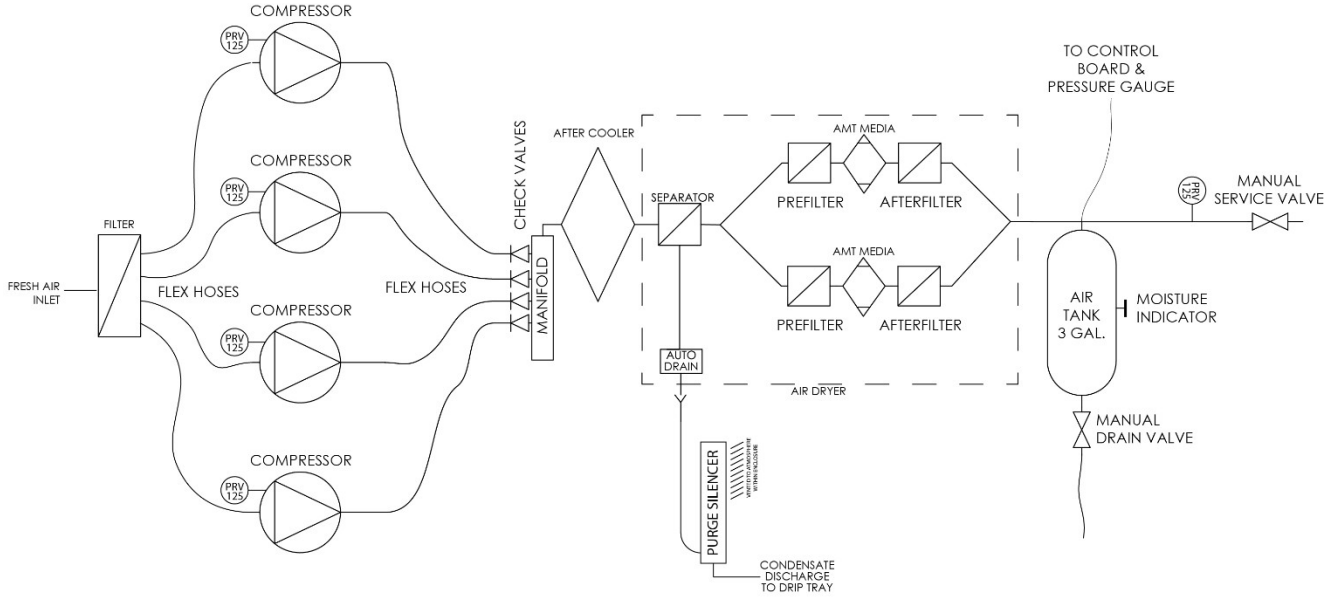

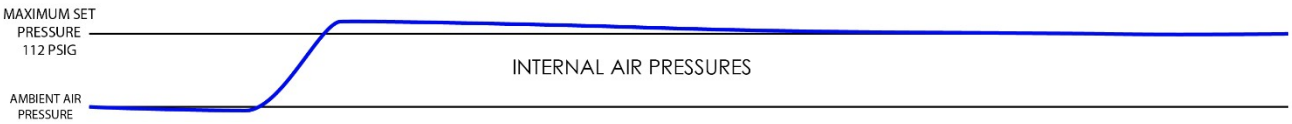

9. INSTALLATION (FOR QUALIFIED SERVICE PERSONNEL)

WARNING

Do not operate unit if damaged during shipping, handling, or use. Operating unit if damaged may result in injury.

UNPACKING

1. Examine contents for damage prior to removing shipping carton.
2. If shipping damage is found, immediately contact the freight carrier to file a claim.
3. Carefully remove the shipping carton from the pallet containing the compressor.
4. Visually inspect the entire compressor system for shipping damage.
5. If shipping damage is found, immediately contact the freight carrier.
6. Remove (4) ½” Bolts from shipping skid with a ½” wrench or socket.
7. Installation kit is separately boxed, included.
8. Verify that the installation kit parts were shipped with the system

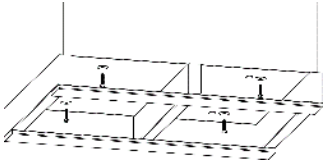

Please Recycle all packaging

Installation kit includes

	Part	Description	Qty
	C0121	Vibration Isolating Feet	4
	P0071-BLUE	Compressor Discharge Hose	6’
	P0066	Compressor Discharge Tube Adapter. 3/8” Tubing to ½” NPT	1
	C0148	Condensate Evaporation Tray	1

NOTICE	
This compressor is shipped with 4 Vibration Isolating feet in the installation kit. THESE FEET MUST BE INSTALLED.	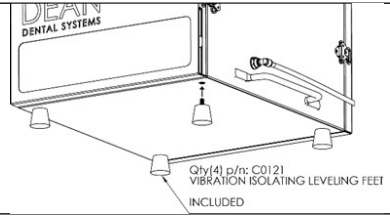

1. SITE REQUIREMENTS
    1. Indoor use only
    2. Dust free, climate controlled room
    3. DO NOT install/operate in an enclosed area where ambient temperature could exceed temperature specifications of below 0 °C / 32 °F, or above 40 °C / 104 °F
    4. Maintain minimum 12 inch clearance on all sides and top of all compressors for service access and cooling
    5. Ensure unit stands level and firmly on the floor
2. CLASSIFICATIONS
    1. Type of protection against electric shock: Class 1.
    2. Degree of protection against electric shock: Not Classified – no applied parts.
    3. Classification according to the degree of protection against ingress of water: Not Classified – IPX0.
    4. Equipment not suitable for use in the presence of a flammable anesthetic mixture with air or with oxygen or nitrous oxide.
    5. Mode of operation: Continuous with 50% full load duty cycle.

⚠ CAUTION
• **Do not install in an area where ambient temperature is below 30 degrees F or above 104 degrees F.** • **Do not install unit in an area where air is dirty and/or chemical laden.** • **Unit is not to be installed outdoors.**

3. DISPOSAL OF EQUIPMENT
   At the end of product life, the unit(s), accessory, and other consumable goods may become contaminated from normal use. Consult local codes and ordinances for proper disposal of equipment, accessories and other consumable goods.

4. PLUMBING
   1. AIR LINE
      1. Layout
         1. Use type L or K Copper tube installed to NFPA99 Level 3 specification.
         2. Sizing recommendations

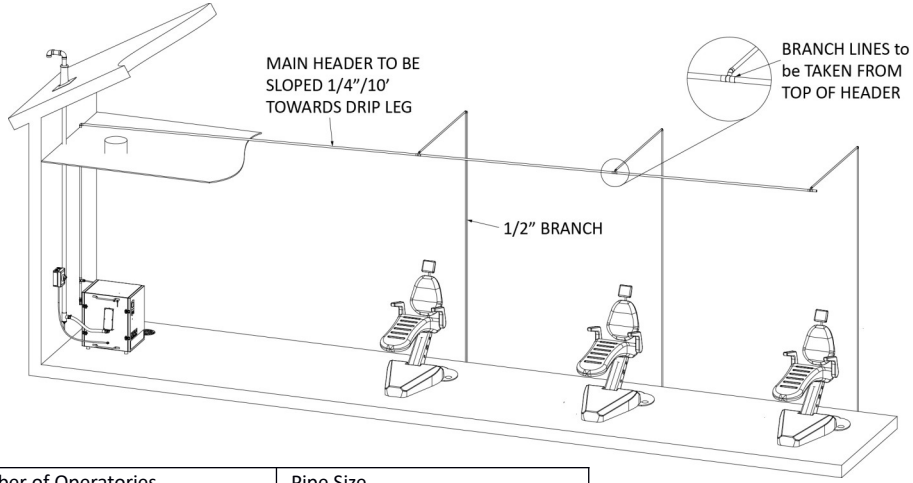

Number of Operatories	Pipe Size
1-3	3/8”
4-6	1/2”
6-10	5/8”
10+	3/4”+ (consult factory)

         3. Sloped towards compressor or Underground cleanout

2. Connections to compressor

1. Compressed Air Connection
    1. Terminate Piping system near compressor with ½”NPT(F) fitting. Compressor ships with fitting and 6’ of hose.
2. Condensate Exhaust
    1. 3/8” Tubing provided. Route to drain or included condensate tray.

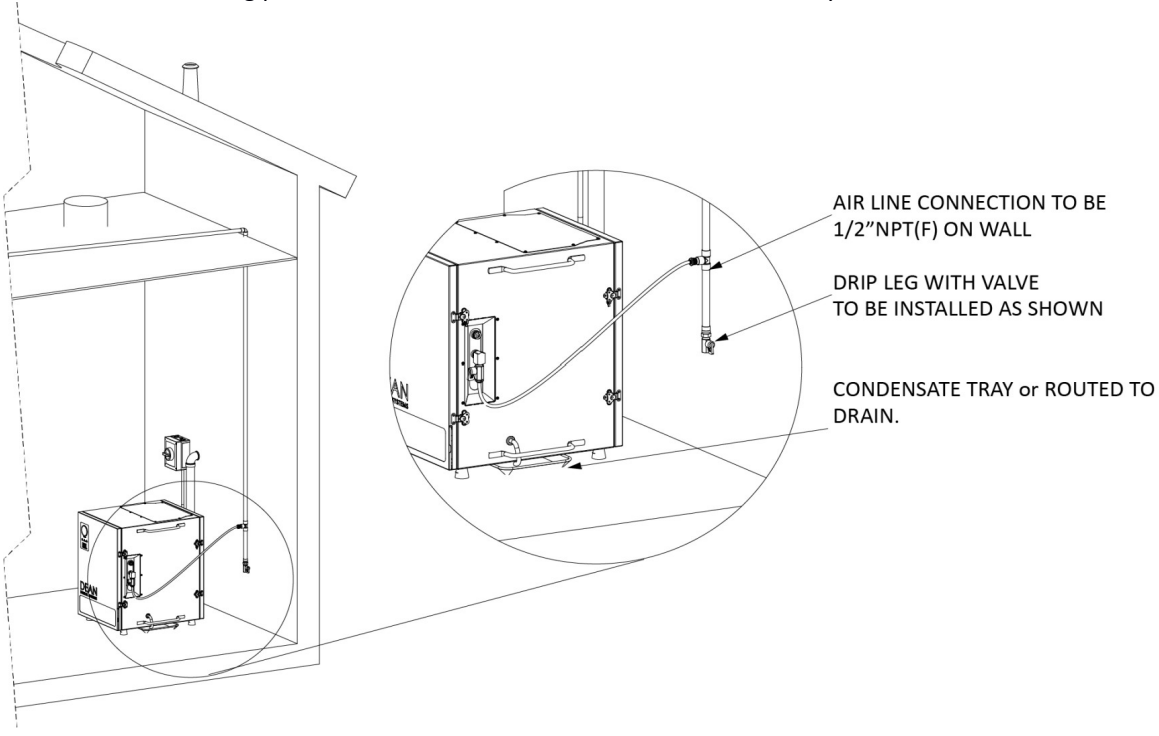

3. Fresh Air Intake

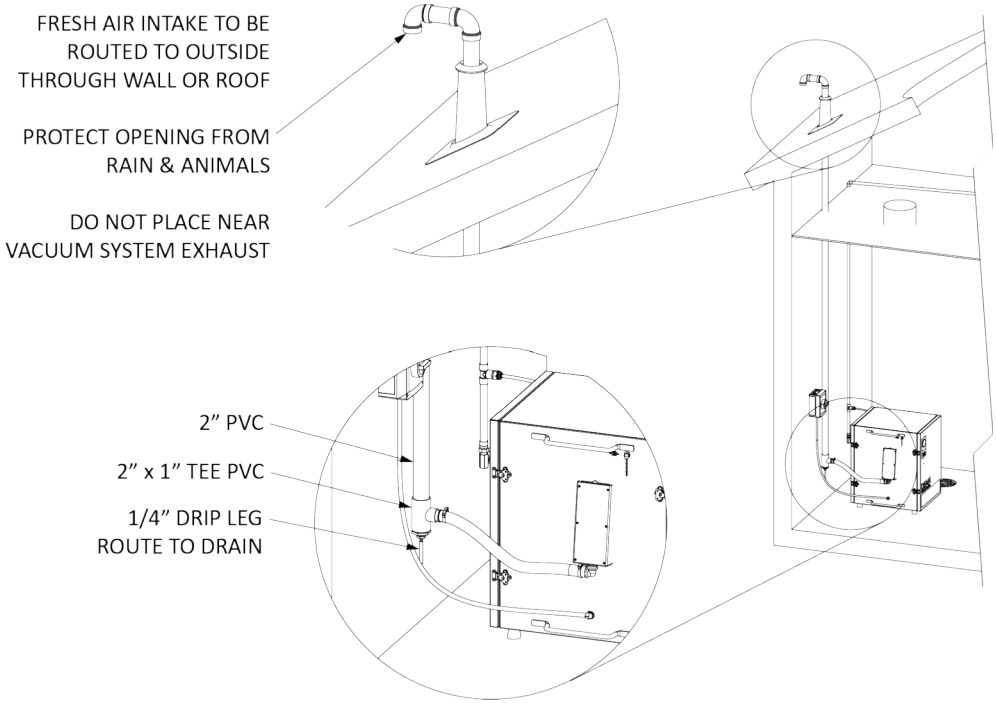

5. VENTILATION

Adequate cooling air is required.

All compressor models are installed and operated in a thermostatically otherwise stable ambient temperature environment. Forced air and HVAC input should be used in addition to an exhaust fan if normal ambient temperatures vary from specified operating temperature range.

The ambient temperature range of the compressor is 40-104°F.

Compressor Life is directly affected by the operating temperature.

Model	Maximum Heat Rejection	CFM cooling fan*
SC3r	3800 BTU/hr	200
SC5r	5000 BTU/hr	230
SC7r	7600 BTU/hr	350
SC10r	10,000 BTU/hr	460
SC12r	10,000 BTU/hr	460

Each Motor has an internal thermal cut out switch
Set at: 293°F(145°C)

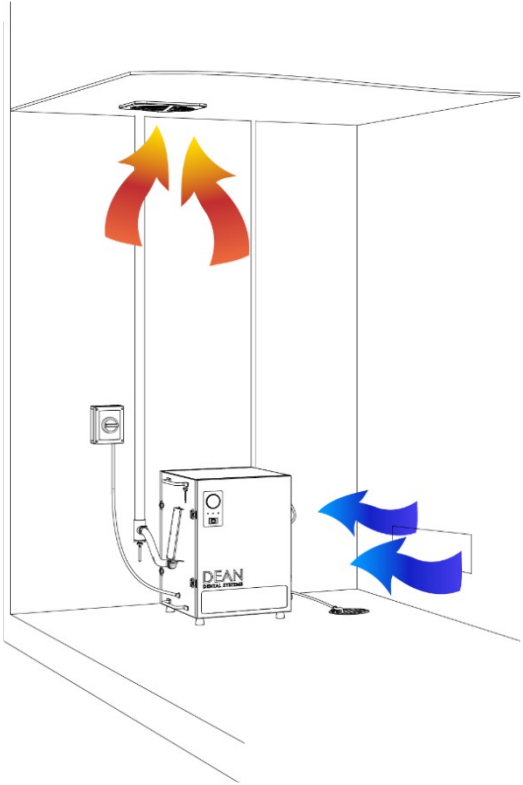

or

*based on 80F cooling air available and 100F maximum mechanical room temperature. Does NOT include additional heat sources in mechanical room.

6. ELECTRICAL

1. ELECTRICAL SAFETY:

- Follow NEC, NFPA 99C and all local codes.
- Qualified personnel must install electrical wiring and outlets.
- Unit requires a dedicated (separate branch circuit only) 20 or 30 amp circuit.(See “SITE REQUIREMENTS”).
- Unit requires an external disconnecting device which disconnects each live supply conductor.
- As an Option, a field installed UL Listed Plug rated for voltage and current to be supplied by others.
- Never operate unit outside the specified voltage range (see “SITE REQUIREMENTS”).
- See “SPECIFICATIONS” for more electrical information.
- Power indication light on front of electrical cover displays when system power is on.

⚠ WARNING
Do NOT run/stop the SC_ Compressor System by turning the main power ON/OFF. Run/stop via remote switch, or Local On/Off Switch ONLY.

⚠ WARNING
Connect in accordance with NEC Class 2 wiring methods and all local codes

⚠ WARNING
Do not attempt to operate compressor on voltage other than that specified.

2. MAIN SUPPLY/PLUG WIRING OPTIONS (FOR QUALIFIED SERVICE PERSONNEL)

1. Hard Wired / Disconnect Option:

WARNING
ELECTRICAL SHOCK CAN OCCUR IF PRODUCT IS IMPROPERLY GROUNDED. THIS EQUIPMENT MUST ONLY BE CONNECTED TO A SUPPLY MAINS WITH PROTECTIVE EARTH.

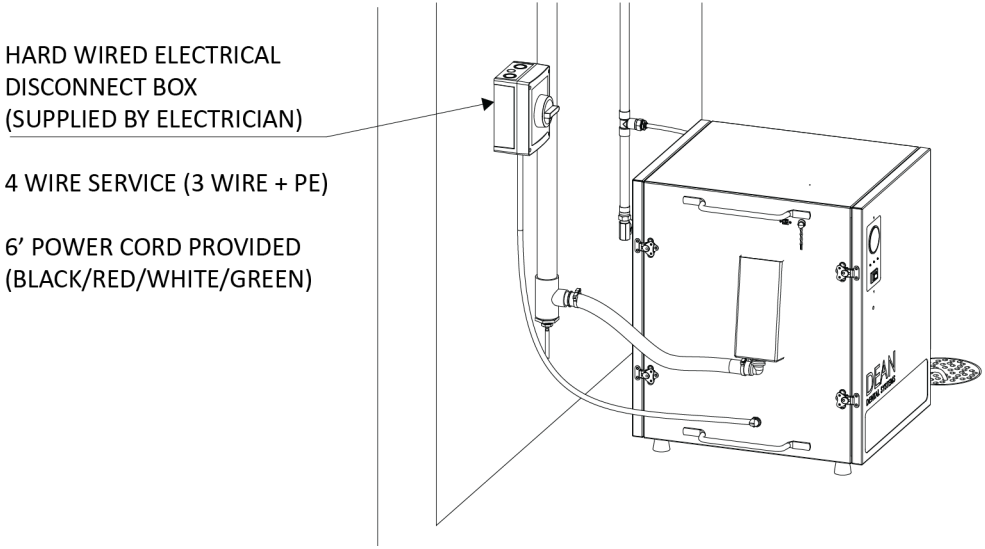

2. Field Installed Plug Option:

BUILDING WIRING AVAILABLE

	SC3r	SC5r	SC7r	SC10r	SC12r
115/120V 3-WIRE (HOT,NEUTRAL,GND)	15 AMP CIRCUIT **NEMA 5-15** 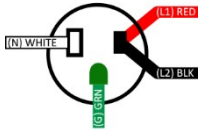 12.5 AMPS	20 AMP CIRCUIT **NEMA 5-20** 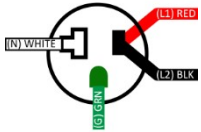 17.4 AMPS	30 AMP CIRCUIT **NEMA 5-30** 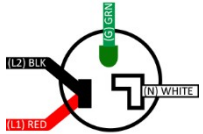 23.2 AMPS	50 AMP CIRCUIT 29 AMPS HARD WIRE ONLY	50 AMP CIRCUIT 34.8 AMPS HARD WIRE ONLY
208/240V 3-WIRE (HOT,HOT,GND)	15 AMP CIRCUIT **NEMA 6-15** 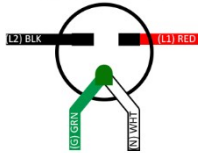 5.8 AMPS	20 AMP CIRCUIT **NEMA 6-20** 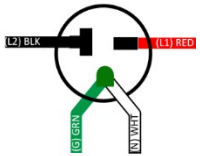 8.7 AMPS	11.6 AMPS	30 AMP CIRCUIT HARD WIRE ONLY 14.5 AMPS	17.4 AMPS
***208/240V 4-WIRE (HOT,HOT, NEUTRAL,GND)** ***RECOMMENDED WIRING**	20 AMP CIRCUIT **NEMA 14-20** 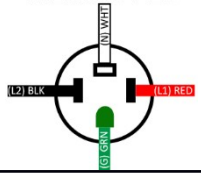 5.8 AMPS	8.7 AMPS	11.6 AMPS	30 AMP CIRCUIT HARD WIRE ONLY 14.5 AMPS	17.4 AMPS

3. LOW VOLTAGE / ETHERNET (FOR QUALIFIED SERVICE PERSONNEL)

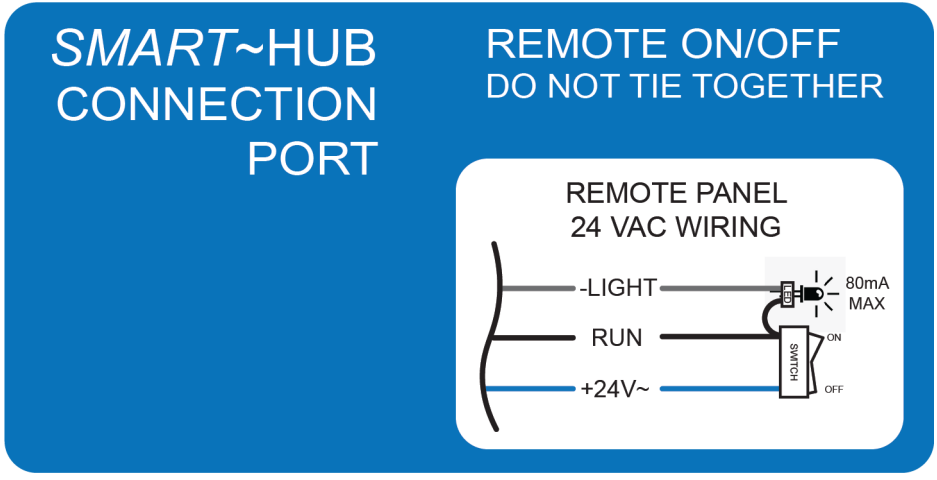

7. OPERATION OVERVIEW (FOR USER)

- On initial startup at 0 psi, The compressor pumps will come on in a staggered startup. #1, then #2, etc.
- The internal electronics continually monitor the pressure, turning the compressors off at 100.
- When the pressure drops, the first compressor starts at 84. If the pressure continues to drop, the 2nd pump starts at 82 psi, the 3rd at 80, and the 4th at 78. (number of total pumps is dependent on compressor model installed)
- After 5 seconds of operation, the cooling fan will turn on and continue to run for 10 minutes after the pumps stop. Cooling fan may also run automatically if internal compressor temperature is above 90°F.
- The Compressed air dryer will discharge moisture every 120 Seconds of elapsed operation.

8. INITIAL START UP (FOR QUALIFIED SERVICE PERSONNEL)

⚠ WARNING
This Compressor can start automatically without warning.

- Inspect unit for any visible signs of damage that may have occurred in shipment or during installation.
- Disconnect main power to unit to assure that no power is coming into the unit.
- Activate main disconnect switch or circuit breaker.
- Close Service Valve and start.
- With receiver hand valve closed, Switch to “ON” position.
- Allow machine pump up to operating pressure. At this stage the automatic controls will take over.
- Check for proper cycling operation
- Slowly open receiver hand valve. The air compressor unit is now ready for use.

9. CONTROLS (FOR USER)

- The Pressure Gauge reflects the system pressure in the air tank.
  - *Gauge Accuracy: ASME B40.100, Grade B, ±3-2-3%*
- The LED indicators are as follows:
  - GREEN – RUN – Illuminated when a pump is running
  - GREEN – RUN – Flashing 1 sec when system is standby (reached high pressure, zero pumps running, pressure above restart pressure)
  - YELLOW – INFO – Slow Flash (heartbeat) when power is applied to unit.
  - YELLOW – INFO – Flash 1 sec during run, count indicating number of pumps running.
  - YELLOW – ATTENTION – Flash 1 sec during fault condition. Count indicating fault code. See troubleshooting.
- Switch
  - ON – Operates compressor
  - REMOTE – allows compressor operation by either:
    - Smart Touch control panel
    - Remote Switch
- Moisture Indicator
  - BLUE = Dry Air
  - PINK = Wet Air. Contact service.

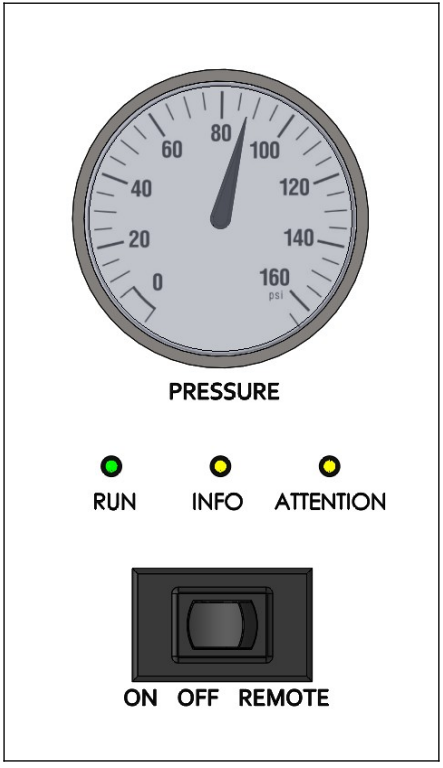

10. MAINTENANCE CHART (FOR USER & QUALIFIED SERVICE PERSONNEL)

Time	Maintenance	Parts Required
Weekly	Check Control Panel for proper operation Check Moisture Indicator (if PINK, contact service)	n/a
Monthly	Clean / Dust Compressor, Check for air leaks	n/a
Annually	Change Inlet Filter Change Panel Filter	Annual Filter Kit A0050/SC3, 5,7 A0150/SC10,12
5 Years	Replace AMT® Media Cartridges	A0051

⚠ WARNING

Before performing any maintenance function, disconnect main power to assure no power is entering unit. Be sure all air pressure is relieved. Failure to do so may result in injury or equipment damage.

⚠ WARNING

Never operate compressor without cabinet doors installed. Failure to do so may result in injury or equipment damage.

⚠ CAUTION

The compressor must not be lubricated with any greases or oils because all bearings have permanently sealed special lubrication.

ANNUAL FILTER CHANGE PROCEDURE

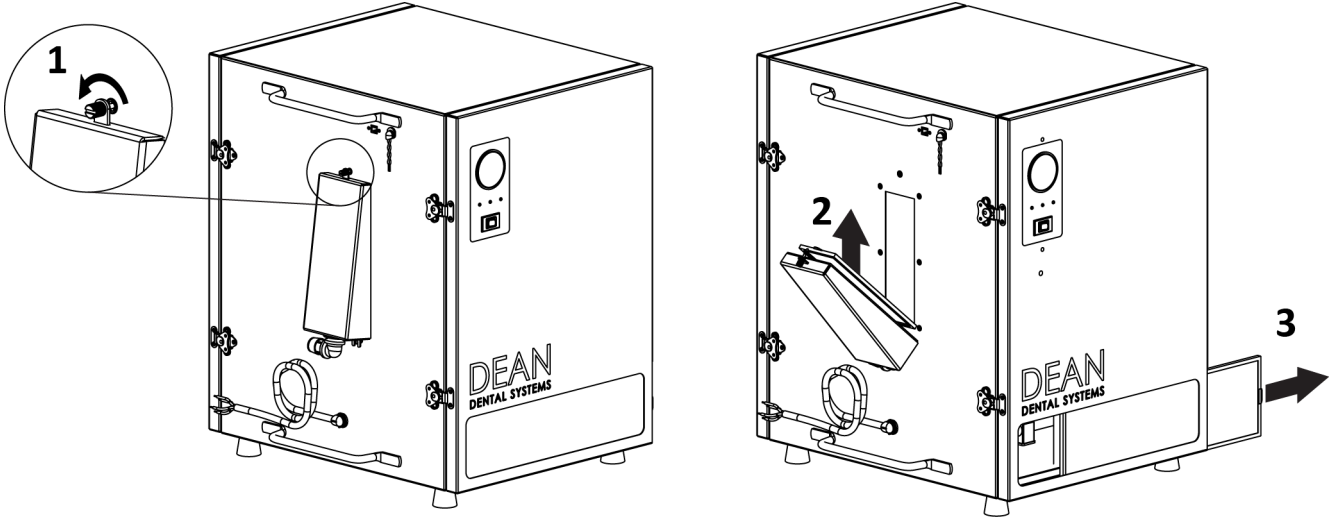

11. TROUBLESHOOTING (FOR QUALIFIED SERVICE PERSONNEL)

SYMPTOM	POSSIBLE CAUSE	REMEDY
Compressor Doesn't start no LED lights illuminated	Wrong Voltage	Check Voltage
	Improper Wiring	Check that the wiring is per diagram. The compressor requires a Neutral connection for operation.
	Circuit Breaker tripped / fuses blown	Check incoming power source.
ATTENTION Flashing CODE		
1	Excessive Demand (compressor at 100% capacity)	Check for Office Air Leaks Check for Internal Air Leaks (close service valve and operate compressor) Check Compressor Sizing
2	High Ambient Temp Warning	Reduce ambient temperature.
3	High Ambient Temp Shutdown	Reduce ambient temperature. Compressor will not re-start until ambient temperature is <90FChange Intake and Ambient Filters
4	Perform Annual Maintenance	Change Intake and Ambient Filters (Maintenance Kit pn A0050)
5	Perform 5 year Maintenance	Change Dryer Cartridges (Maintenance Kit pn A0051)
6	PUMP 1 issue	Pump #1 did not perform as expected. Contact service
7	PUMP 2 issue	Pump #2 did not perform as expected. Contact service
8	PUMP 3 issue (if installed)	Pump #3 did not perform as expected. Contact service
9	PUMP 4 issue (if installed)	Pump #4 did not perform as expected. Contact service
10	PUMP 5 issue (if installed)	Pump #5 did not perform as expected. Contact service
11	PUMP 6 issue (if installed)	Pump #6 did not perform as expected. Contact service
12	Fan Fault	Cooling fan failed diagnostic test. Contact Service
Moisture indicator pink	Dryer Not cycling	Operate compressor under constant load and check for dryer cycling (See Dryer Troubleshooting). Test Wiring Service as necessary
	Cartridges past working life	Perform dryer service. Replace cartridges.
Excessive Vibration	Worn vibration isolators	Replace as necessary
	Worn Tray isolators	Replace as necessary

Additional information (parts list, component detail, and wiring diagrams) available upon request or at www.deandentalsystems.com

12. OUTLINE DRAWING

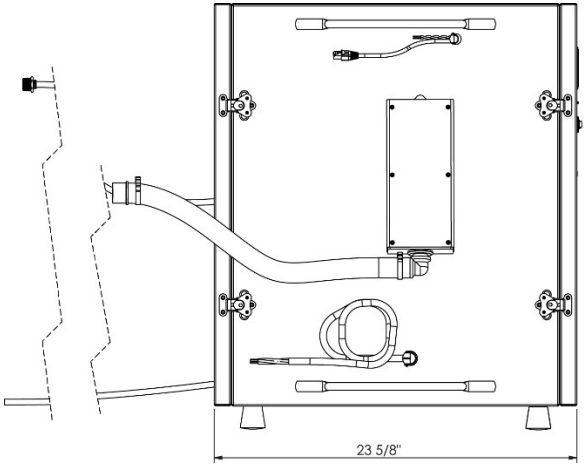

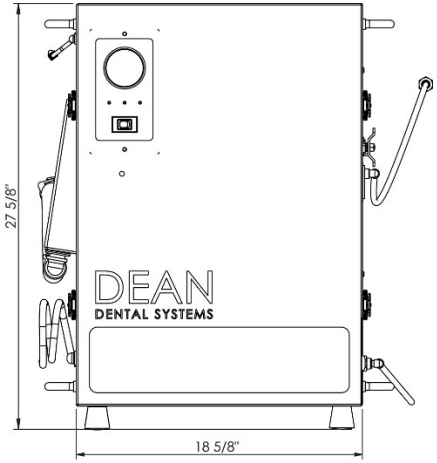

13. WIRING DIAGRAM (FOR QUALIFIED SERVICE PERSONNEL)

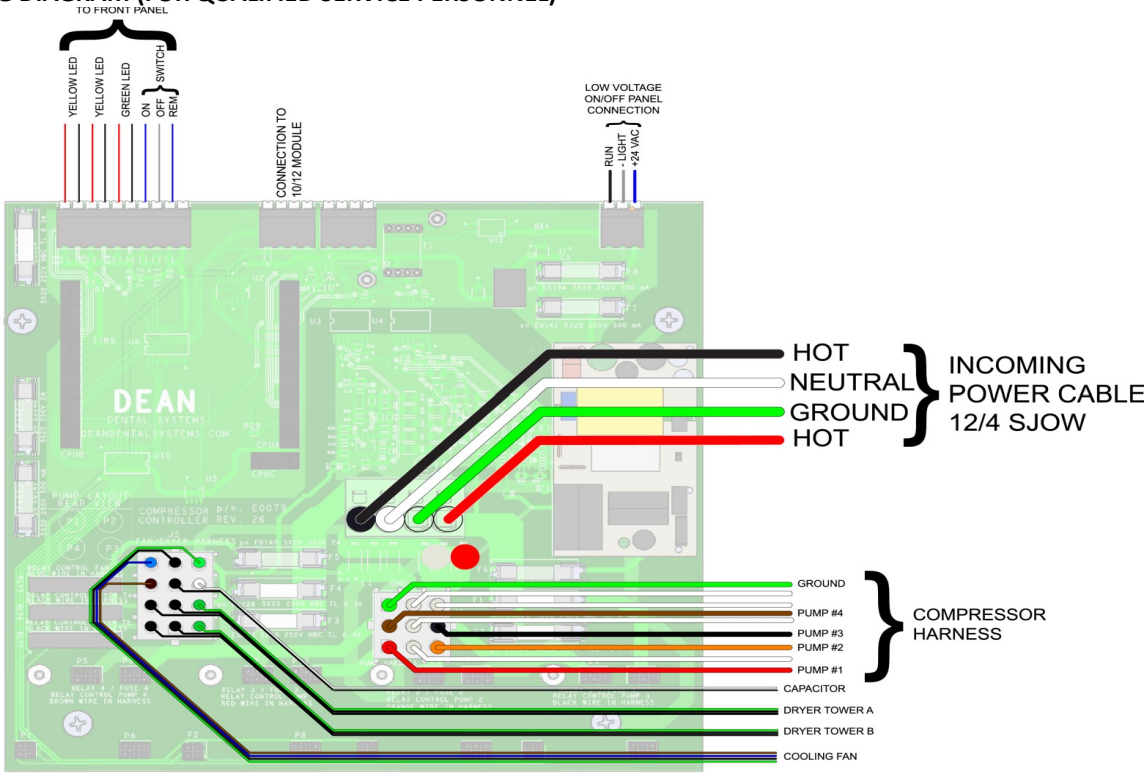

14. VOLTAGE TESTING LOCATIONS (FOR QUALIFIED SERVICE PERSONNEL)

TESTING VOLTAGES LINE VOLTAGE LOCATIONS

SET METER FOR VOLTS AC

VALUE SHOULD BE LINE VOLTAGE

190-260 VAC is ACCEPTABLE

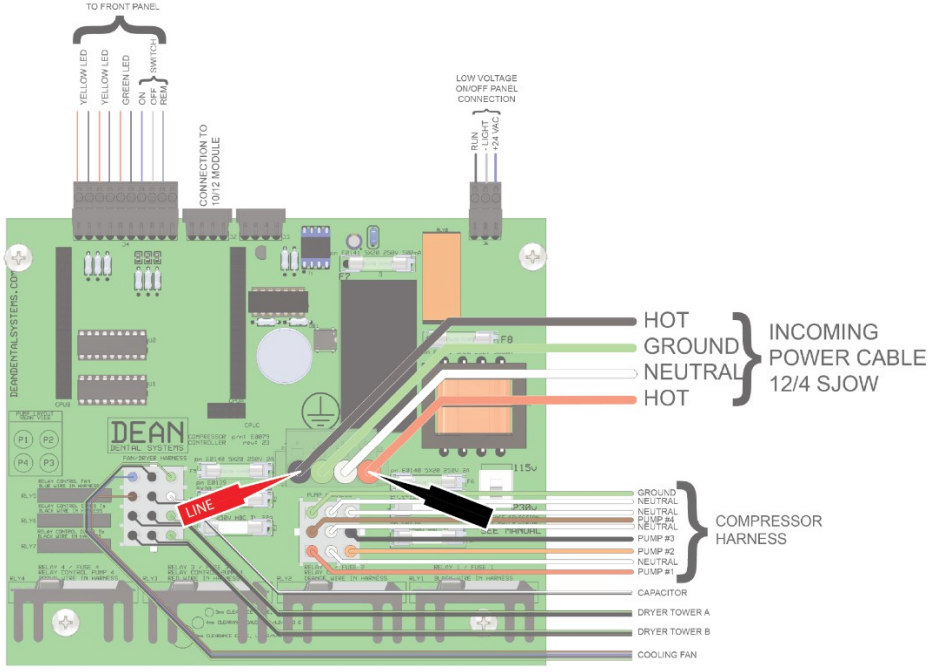

TESTING VOLTAGES 115 VOLT LOCATIONS

SET METER FOR VOLTS AC

VALUE SHOULD BE APPROX.
LINE VOLTAGE /2
(DIVIDED BY 2)

105-130 VAC is ACCEPTABLE

VALUES TO BE +/- 5 V AT EACH LOCATION

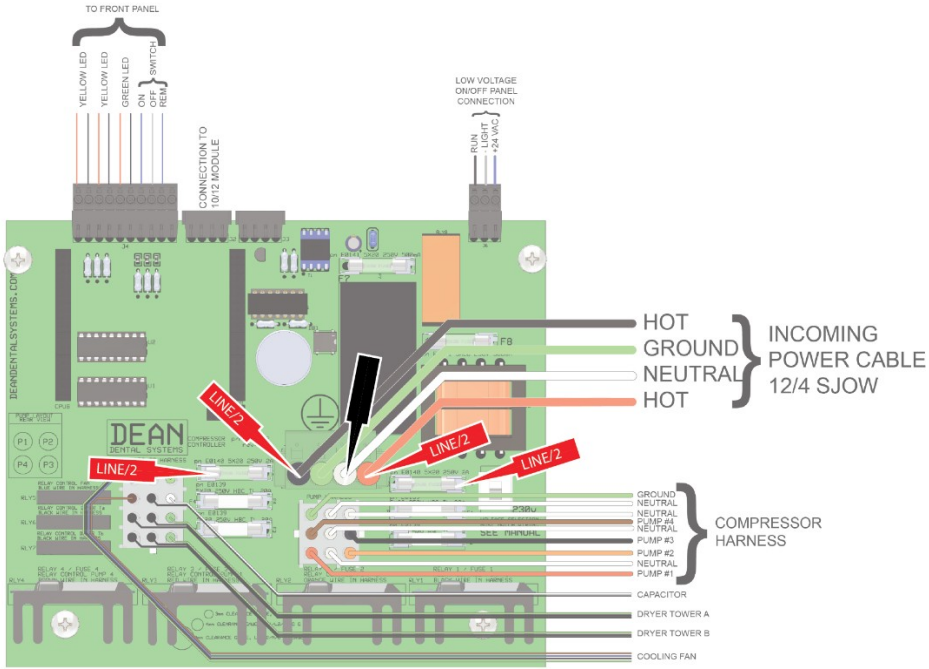

TESTING VOLTAGES 24 VOLT AC LOCATIONS (LOW VOLTAGE SWITCH)

SET METER FOR VOLTS AC

VALUE SHOULD BE APPROX. 24 VAC

20-35 VAC is ACCEPTABLE

IF LOWER THAN 18 VAC, CHECK POSITION OF 115/230V SWITCH

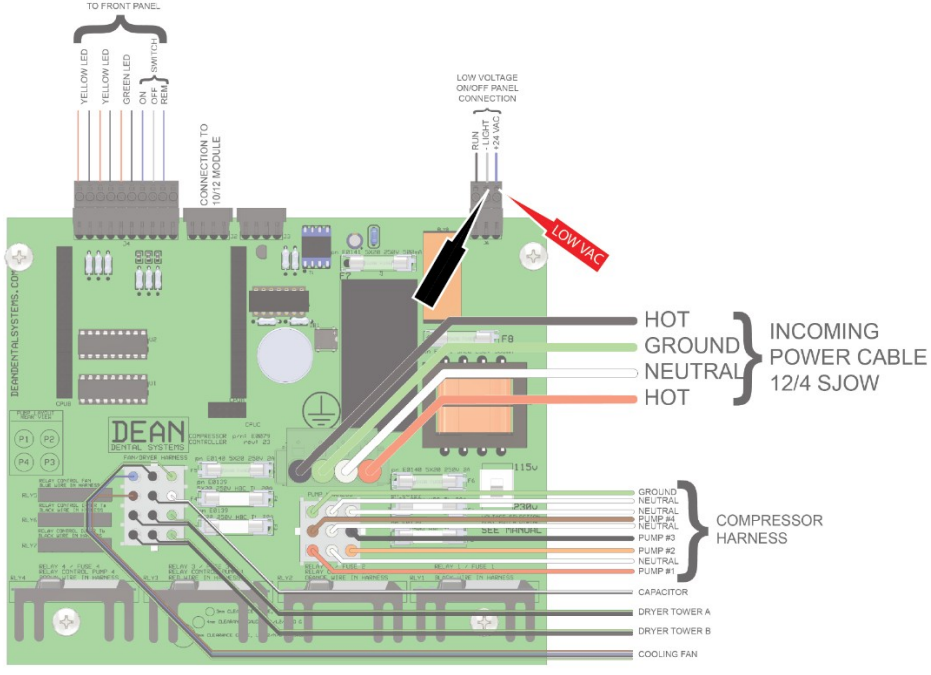

TESTING VOLTAGES 5 VOLT DC LOCATIONS

SET METER FOR VOLTS DC

VALUE SHOULD BE EXACTLY 5.0 VDC +/- 0.1

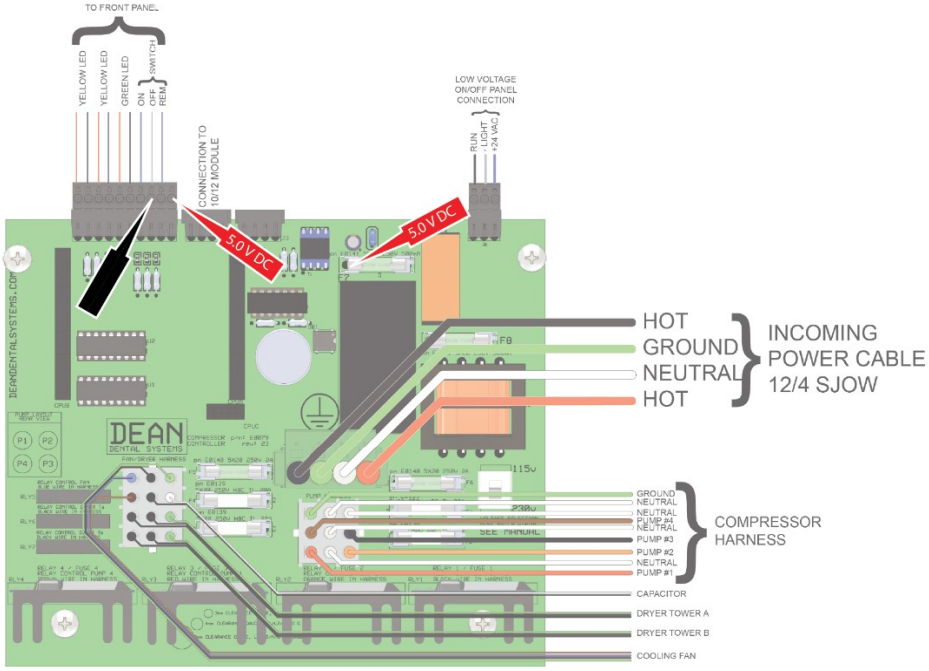

15. AIR DRYER OPERATION & TROUBLESHOOTING (FOR QUALIFIED SERVICE PERSONNEL)

1. AIR DRYER THEORY

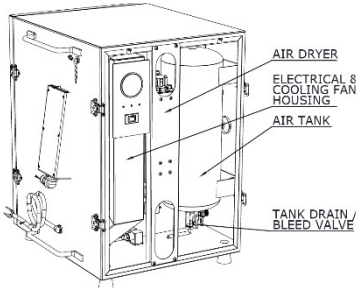

1. The SC Compressors utilize a twin tower regenerative air dryer. The compressed air is passed through a pressure vessel with two "towers" filled with patented Absorbent Media Technology (AMT©). This extruded desiccant material attracts the water from the compressed air via adsorption. As the water clings to the AMT©, the AMT© "bed" becomes saturated. The dryer is timed to switch towers based on a cycle, once this cycle completes some compressed air from the system is used to "purge" the saturated AMT© bed by simply blowing the water that has adhered to the AMT© off.
2. The duty of the AMT© is to bring the pressure dew point of the compressed air to a level in which the water will no longer condense, or to remove as much water from the compressed air as possible. The dryer design point is −40 °F; this means that when the air leaves the dryer there is as much water in the air as if the air had been "cooled" to −40 °F.

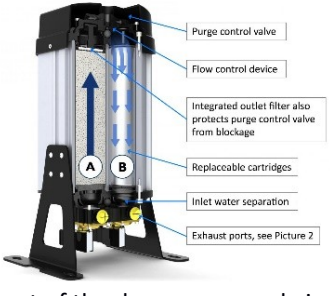

3. A PDP of better than -15°F will inhibit the growth of micro-organisms

The regeneration of the desiccant vessel is via Heatless "pressure-swing" drying, which uses part of the dry compressed air coming from the other vessel to dry the desiccant in the vessel being regenerated at lower pressure. Regeneration or “Purge Air” exhaust is approximately 10-12% of incoming air.

4. The DEAN Smart Controller on the SC Compressors will shorten or lengthen the drying cycle based on number of pumps running. This reduces the amount of purge air required during low usage, saving energy.

2. AIR DRYER OPERATION

1. The Air Dryer is controlled by the main firmware in the compressor. The following conditions must be met for the dryer timers to operate (AIR DRYER "ON"):
    1. Machine "ON" by either of the following:
        1. Local On/Off/Remote switch in "On" position. *(preferred method for service/troubleshooting)*
        2. Local On/Off/Remote switch in "Remote" position and a low voltage switch in the "On" position.
        3. Local On/Off/Remote switch in "Remote" position and a TSC1 Touchscreen control in "On" position.
    2. System Pressure above 50 PSI.
    3. Machine is actively running (Green "RUN" LED steady, Yellow "INFO" LED Flashing number of pumps active)
2. Air Dryer Timing is controlled by the software in the compressor.
    1. Timer is "paused" (AIR DRYER "OFF") if any of the above conditions are not met.
    2. Timer has 2 components:
        1. Purge Duration. Fixed at 45 Seconds.
        2. Purge Interval. Variable based on dryer mode. See Table
    3. Dryer Has 2 Modes:
        1. Advanced Purge Cycle
            1. Advanced Purge Cycle operates for 10 cycles, approx 10 minutes of run time.
                1. Active when power is initially applied to machine.
                2. Active after Energy Saving Cycle completes.
            2. Purge for 45 Seconds, Switch towers at 60 seconds
        2. Energy Saving Purge Cycle:Operates for 10 cycles with extended duration based on demand.
            1. See Table for timings.

Purge Cycle is indicated by the firing of the purge solenoid and a rush of air/water out of the condensate drain, followed by 45 Seconds of low pressure air

Advanced Purge Cycle (x10)

Purge Interval Timing min:sec	1:00					

Energy Saving Purge Cycle: (x10)

Number of Pumps Running	1	2	3	4	5	6
Purge Interval Timing min:sec	6:40	3:20	2:13	1:40	1:20	1:06

3. Air Dryer Power is provided by L1/N Circuit and utilizes fuse F5

1. Circuit location: 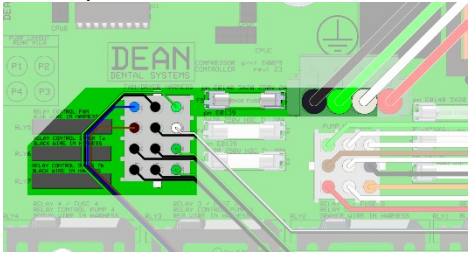

3. AIR DRYER TROUBLESHOOTING (if MOISTURE INDICATOR HAS CHANGED or WATER IN LINES)

Please confirm that water is not entering the compressed air system via failed chairside junction boxes or any other source. The number 1 cause of improper dryer troubleshooting is moisture entering the air system from another source.

1. **Confirm operation of purge solenoid valves:**
    1. Close Service Valve (separate compressor from office air system)
    2. Use Tank Drain valve to release air. (turn valve SLOWLY) Adjust Drain Valve to 70 PSI to activate all available pumps, then Open/Close Valve to maintain 70-95 PSI. If system reaches 100 it will turn pumps off. If pumps turn off, Start the process over (lower than 70, all run, pump up, adjust valve to maintain steady pressure)
    3. Use Stopwatch to time the purge firings. See table to confirm.
        1. If purge doesn't fire:
            1. Confirm that conditions of operation are met.
            2. Check fuse F5. (indicator: Cooling fan will not operate if fuse is blown)
                1. Disconnect power from machine
                2. Open Control Panel
                3. Use Continuity meter across fuse F5. If Blown, replace with similar sized fuse.
            3. Check Voltage to machine
                1. With control panel accessible, connect power to the machine.
                2. The dryer is powered by L1 and NEUTRAL. See Section 14, TESTING 120V LOCATIONS. Voltage Range should be 105-130. Test on main power connector, across L1 and Neutral.
                3. If Voltage isn't present, Check building wiring.
            4. Check Dryer Wiring.
                1. Disconnect power
                2. Visually inspect circuit board. (molex connection, relays, fuse F5). See
                3. Visually inspect dryer solenoid connections (x2) located on bottom of dryer module.

Dryer Cable Solenoid Connection

16. COMMISSIONING CHECKLIST (FOR QUALIFIED SERVICE PERSONNEL)

- ✓ Inspect pneumatic fittings and connections per “SITE REQUIREMENTS” and “INSTALLATION-PLUMBING CONNECTIONS”
- ✓ Review drain tubing installation. Secure opposite end to floor drain or to lower handle of compressor if utilizing the drip pan.
- ✓ Attach electrical connections per “SITE REQUIREMENTS” and “INSTALLATION -ELECTRICAL”
- ✓ Verify incoming line voltage meets specifications.
- ✓ Turn on power to dedicated circuit and ensure unit starts. If not, refer to “TROUBLESHOOTING GUIDE”
- ✓ Check for system and operatory leaks
- ✓ Check system pump-up and recovery time

Regulatory Information and Warranty

For required regulatory information and the A-dec warranty, see the *Regulatory Information, Specifications, and Warranty* document (p/n 86.0221.00) available in the Resource Center at www.a-dec.com.

A-dec Headquarters
2601 Crestview Drive
Newberg, OR 97132 USA
Tel: 1.800.547.1883 Within USA/CAN
Tel: +1.503.538.7478 Outside USA/CAN
www.a-dec.com

A-dec Inc. makes no warranty of any kind with regard to the content in this document including, but not limited to, the implied warranties of merchantability and fitness for a particular purpose.

reliablecreativesolutions®

V2.13
Date of Issue 2020-04-17
Copyright 2020 A-dec Inc.
All rights reserved.