VERSION 2.2 - 05-21-2021

TECHNICAL MANUAL

05-21-2021

New generation of innovative design Screw compressor

High-efficiency Model RC2 Series Screw Compressor

5580 Enterprise Pkwy., Fort Myers, FL 33905 Office (239) 694-0089 Fax: (239) 694-0031

www.mcscontrols.com

Table of Contents

General 3
Specifications and description of design 3
Compressor nomenclature 3
Compressor specifications 4
RC2 series 4
Design features 8
Compression process 9
Capacity control system 9
3 or 4-step capacity control system 10
Continuous (stepless) capacity control system 11
Dual capacity control system(optional) 11
Compressor volume ratio(Vi) 14
Application limits 14
MCC and LRA 17
Lubricants 19
Lubricant stable 19
Pre-cautions of changing oil 20
Oil change 20
Compressor handling and installation 21
Compressor lifting 21
Mounting the compressor 22
RC2 Compressor outline drawings 23
Compressors accessories 46
Installation and connection of compressor 60
Electrical data and design 63
Motor design 63
Compressor protection devices 66
Power supply 66
Grounding 67
Operation and maintenance 68
Compressor start-up 68
Troubleshooting 69
Additional cooling 70
Economizer applications 73
Parallel system applications 74
Oil pump application 75
Important note of applications of compressor 75
Selection software 76
Appendix. RC2 Compressor noise level 78
Handling POE Oils 79
Warranty Start Up/Status Report form 80

1. General

HANBELL **RC2** series semi-hermetic screw compressor is developed especially for applications in air-conditioning and refrigeration. With high operating load design, each HANBELL compressor is of high efficiency and reliability in all operating conditions such as thermal storage, heat pump system & refrigeration. Each HANBELL compressor has the latest and advanced **5-to-6 Patented Screw Rotor Profile** designed to ensure high capacity and efficiency in all operating conditions. Each unit is carefully manufactured and inspected by high precision THREAD SCREW ROTOR GRINDING MACHINE, CNC MACHINING CENTER, and 3D COORDINATE MEASURING MACHINE. Each **HANBELL** compressor follows **ISO 9001** quality system. This certification assures that its quality is controlled under severe quality procedures and good service to all customers.
RC2 series compressor is equipped with separated radial and axial bearings, liquid injection and economizer connection, PTC motor temperature thermistors and discharge temperature thermistors, a motor protector, and oil level switch and oil pressure differential switch connector and other accessories. The complete accessories and their new designs guarantee the compressor has the best reliability, longest bearing life during heavy duty running and strict operating conditions.

This Technical Manual contains information about lifting, dimensions, installation, operation, applications and basic trouble-shooting. It is strongly recommended that contents of this manual should be referred carefully prior to lifting, installation, and commissioning of RC2 series compressor in order to prevent any accident or damage. Please contact HANBELL or its local distributors/agents for more information or further assistance.

2. Specifications and description of design

2.1 Compressor nomenclature

RC 2 – x x x x x

Refrigerant Code **A** = R134a, R1234yf, R1234ze
B = R22, R407C, R404A, R507A

Compressor's Displacement at **50Hz (m^3/hr)**

RC Series **2nd** Generation

2.2 Compressor specifications

a. RC2-A

MODEL	COMPRESSOR					MOTOR								Lubricant charge	Oil Heater	Hydrostatic Pressure Test	WEIGHT
	Displacement 60 / 50Hz	Rated Speed 60 / 50Hz	VI	Cap. Control (%)		Type	Nominal Hp		Starting	Voltage (V)		Insulation	Protection				
	m^3/hr			STEP	STEPLESS		60Hz	50Hz		60Hz	50Hz			L	W	Kg/cm2G	kg
RC2-100A	118/98	3550/2950	2.2 2.6 3.0 3.5 4.8	33, 66, 100	33~100	3 Phase, 2 Pole, Squirrel Cage, Induction Motor	23	19	Y-△ PWS DOL	208 220 230 380 440 460 480 575	380 400 415	Class F	PTC Protection	7	150/300	42	275
RC2-140A	165/137			33, 66, 100	33~100		32	26						7			280
RC2-180A	216/180			33, 66, 100	33~100		42	35						7			300
RC2-200A	233/193			25, 50, 75, 100	25~100		45	37						8			420
RC2-230A	277/230			35, 50, 75, 100	35~100		53	44						14			540
RC2-260A	309/257			25, 50, 75, 100	25~100		59	49						14			545
RC2-300A	352/293			25, 50, 75, 100	25~100		67	56						16			590
RC2-310A	371/308			35, 50, 75, 100	35~100		71	59						16			575
RC2-320A	384/320			25, 50, 75, 100	25~100		72	60						16			595
RC2-340A	407/339			35, 50, 75, 100	35~100		77	64						16			600
RC2-370A	440/366			35, 50, 75, 100	35~100		84	70						16			610
RC2-410A	490/407			25, 50, 75, 100	25~100		93	78		380 440 460 480 575				16			730
RC2-430A	509/423			25, 50, 75, 100	25~100		93	78						16			735
RC2-470A	567/471			25, 50, 75, 100	25~100		108	90						18			800
RC2-510A	611/508			35, 50, 75, 100	35~100		117	98						20			760
RC2-550A	660/549			25, 50, 75, 100	25~100		126	105						23			820
RC2-580A	702/583			35, 50, 75, 100	35~100		131	109						20			805
RC2-620A	745/619			35, 50, 75, 100	35~100		137	114	Y-△ DOL					23			850
RC2-710A	858/713			35, 50, 75, 100	35~100		158	131						28			1099
RC2-790A	952/791			30, 50, 75, 100	30~100		175	146						28			1140
RC2-830A	993/825			30, 50, 75, 100	30~100		183	152						28			1150
RC2-930A	1117/929			35, 50, 75, 100	35~100		212	176						28			1180
RC2-1020A	1223/1017			25, 50, 75, 100	25~100		227	189						40			1500
RC2-1130A	1350/1122			25, 50, 75, 100	25~100		248	206						40			1520
RC2-1270A	1521/1268			25, 50, 75, 100	25~100		286	238						53			2100
RC2-1530A	1847/1539			25, 50, 75, 100	25~100		331	275						53			2200

Nominal Horse Power:
All the above Nominal Hp's are not equal to the maximum compressor Hp. Please refer to Hanbell selection software's output for rated current and Maximum Continuous Current-M.C.C according to various operating conditions while selecting sizes of contactor, cable, fuse and wire, etc…

b. RC2-B

MODEL	COMPRESSOR					MOTOR								Lubricant charge	Oil Heater	Hydrostatic Pressure Test	WEIGHT
	Displacement 60 / 50Hz	Rated Speed	VI	Cap. Control (%)		Type	Nominal Hp		Starting	Voltage (V)		Insulation	Protection				
	m^3/hr	60 / 50Hz		STEP	STEPLESS		60Hz	50Hz		60Hz	50Hz			L	W	Kg/cm2G	kg
RC2-100B	118/98	3550/2950	2.2 2.6 3.0 3.5 4.8	33, 66, 100	33~100	3 Phase, 2 Pole, Squirrel Cage, Induction Motor	38	31	Y-△ PWS DOL	208 220 230 380 440 460 480 575	380 400 415	Class F	PTC Protection	7	150/300	42	280
RC2-140B	165/137			33, 66, 100	33~100		50	41						7			285
RC2-180B	216/180			33, 66, 100	33~100		66	55						7			335
RC2-200B	233/193			25, 50, 75, 100	25~100		70	58						8			425
RC2-230B	277/230			35, 50, 75, 100	35~100		81	67						14			555
RC2-260B	309/257			25, 50, 75, 100	25~100		90	75						14			560
RC2-300B	352/293			25, 50, 75, 100	25~100		107	89						16			600
RC2-310B	371/308			35, 50, 75, 100	35~100		110	91						16			580
RC2-320B	384/320			25, 50, 75, 100	25~100		114	94						16			600
RC2-340B	407/339			35, 50, 75, 100	35~100		121	101						16			620
RC2-370B	440/366			35, 50, 75, 100	35~100		130	108						16			640
RC2-410B	490/407			25, 50, 75, 100	25~100		146	121		380 440 460 480 575				16			740
RC2-470B	567/471			25, 50, 75, 100	25~100		170	141						18			810
RC2-510B	611/508			35, 50, 75, 100	35~100		183	152						20			780
RC2-550B	660/549			25, 50, 75, 100	25~100		195	162						23			850
RC2-580B	702/583			35, 50, 75, 100	35~100		210	175						20			840
RC2-620B	745/619			35, 50, 75, 100	35~100		220	183	Y-△ DOL					23			880
RC2-710B	858/713			35, 50, 75, 100	35~100		250	208						28			1099
RC2-790B	952/791			30, 50, 75, 100	30~100		276	230						28			1180
RC2-830B	993/825			30, 50, 75, 100	30~100		290	234						28			1215
RC2-930B	1117/929			35, 50, 75, 100	35~100		334	278						28			1240
RC2-1020B	1223/1017			25, 50, 75, 100	25~100		357	297						40			1540
RC2-1130B	1350/1122			25, 50, 75, 100	25~100		393	327						40			1560
RC2-1270B	1521/1268			25, 50, 75, 100	25~100		471	392						53			2200
RC2-1530B	1847/1539			25, 50, 75, 100	25~100		534	443						53			2300

Nominal Horse Power:
All above Nominal Hp are not equal to the maximum compressors Hp; Please refer to Hanbell selection software's output for the rated current, Maximum Continuous Current-M.C.C according to various working condition while selecting the contactor, cable, fuse and wire, etc…

2.3 RC2 series compressor construction

RC2-100, RC2-140, RC2-180 Construction

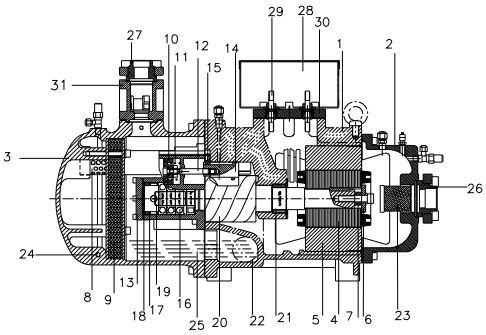

Figure 1

Item	Description	Item	Description	Item	Description	Item	Description
1	Compressor casing	9	Oil separator cartridge	17	Discharge fixed ring	25	Refrigeration Lubricant
2	Motor casing	10	Piston	18	Disc spring	26	Suction flange
3	Oil separator	11	Piston spring	19	Bearing lock nut	27	Discharge flange
4	Motor rotor assembly	12	Piston rod	20	Male rotor	28	Cable box
5	Motor stator assembly	13	Bearing seat's cover plate	21	Suction bearings	29	Power bolt
6	Motor rotor washer	14	Modulation slide valve	22	Oil filler cartridge	30	Motor cable cover plate
7	Motor rotor spacer ring	15	Slide valve key	23	Suction filter	31	Discharge check valve
8	Oil separator baffle	16	Discharge bearings	24	Oil heater		

RC2-200, RC2-230, RC2-260, RC2-300, RC2-310, RC2-320, RC2-340, RC2-370, RC2-410, RC2-430, RC2-470, RC2-510, RC2-580 Construction

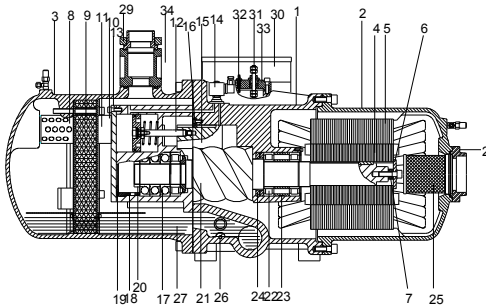

Figure 2

Item	Description	Item	Description	Item	Description	Item	Description
1	Compressor casing	10	Piston	19	Disc spring	28	Suction flange
2	Motor casing	11	Piston spring	20	Bearing lock nut	29	Discharge flange
3	Oil separator	12	Piston rod	21	Male rotor	30	Cable box
4	Motor rotor assembly	13	Bearing seat's cover plate	22	Suction bearings	31	Power bolt
5	Motor stator assembly	14	Modulation solenoid valve	23	Suction bearings inner/outer spacer ring	32	Thermostat terminals
6	Motor rotor washer	15	Modulation slide valve	24	Oil guiding ring	33	Motor cable cover plate
7	Motor rotor spacer ring	16	Slide valve key	25	Suction filter	34	Discharge check valve
8	Oil separator baffle	17	Discharge bearings	26	Oil heater		
9	Oil separator cartridge	18	Discharge fixed ring	27	Refrigeration Lubricant		

RC2-550, RC2-620 Construction

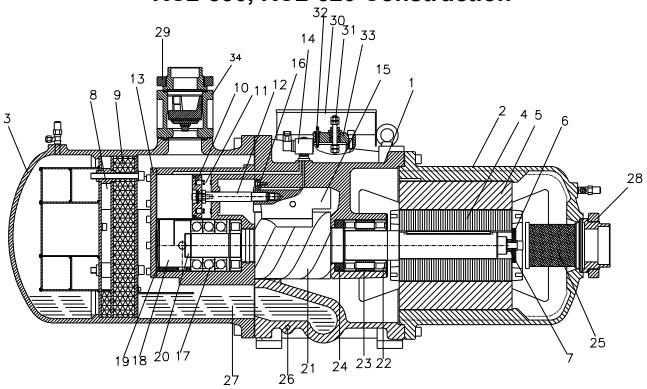

Figure 3

Item	Description	Item	Description	Item	Description	Item	Description
1	Compressor casing	10	Piston	19	Disc spring	28	Suction flange
2	Motor casing	11	Piston spring	20	Bearing lock nut	29	Discharge flange
3	Oil separator	12	Piston rod	21	Male rotor	30	Cable box
4	Motor rotor assembly	13	Bearing seat's cover plate	22	Suction bearings	31	Power bolt
5	Motor stator assembly	14	Modulation solenoid valve	23	Suction bearings inner/outer spacer ring	32	Thermostat terminals
6	Motor rotor washer	15	Modulation slide valve	24	Oil guiding ring	33	Motor cable cover plate
7	Motor rotor spacer ring	16	Slide valve key	25	Suction filter	34	Discharge check valve
8	Oil separator baffle	17	Discharge bearings	26	Oil heater		
9	Oil separator cartridge	18	Discharge fixed ring	27	Refrigeration Lubricant		

RC2-710, RC2-790, RC2-830, RC2-930 Construction

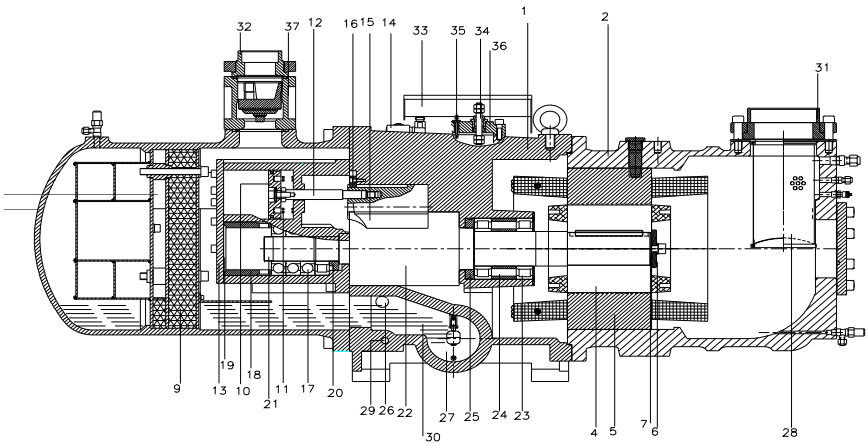

Figure 4

Item	Description	Item	Description	Item	Description	Item	Description
1	Compressor casing	11	Piston spring	21	Bearing lock nut	31	Suction flange
2	Motor casing	12	Piston rod	22	Male rotor	32	Discharge flange
3	Oil separator	13	Bearing seat cover plate	23	Suction bearings	33	Cable box
4	Motor rotor assembly	14	Modulation solenoid valve	24	Suction bearings inner/outer spacer ring	34	Power bolt
5	Motor stator assembly	15	Modulation slide valve	25	Oil guiding ring	35	Thermostat terminals
6	Motor rotor washer	16	Slide valve key	26	Oil level sight glass	36	Motor cable cover plate
7	Motor rotor spacer ring	17	Discharge bearings	27	Oil filler cartridge	37	Discharge check valve
8	Oil separator baffle	18	Discharge fixed ring	28	Suction filter		
9	Oil separator cartridge	19	Disc spring	29	Oil heater		
10	Piston	20	α-Balance piston	30	Refrigeration Lubricant		

RC2-1020, RC2-1130, RC2-1270, RC2-1530 Construction

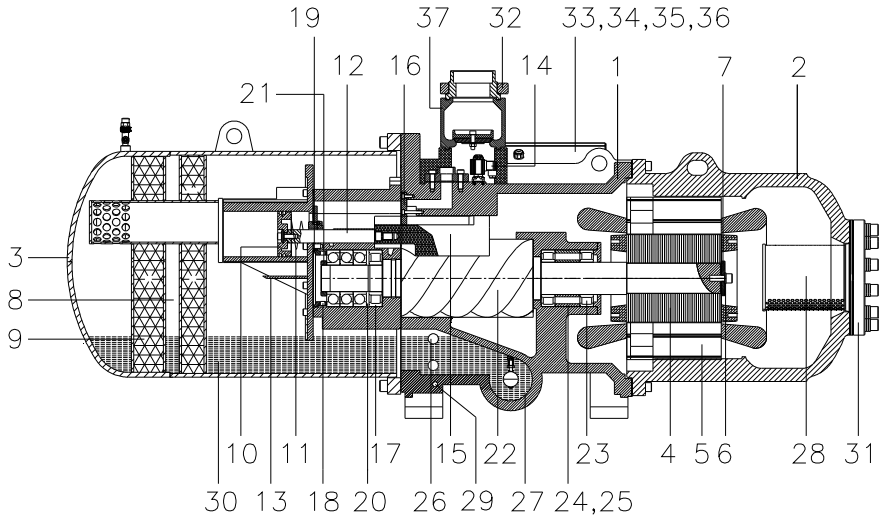

Figure 5

Item	Description	Item	Description
1	Compressor casing	20	Balance piston
2	Motor casing	21	Bearing slot nut
3	Oil separator	22	Male rotor
4	Motor rotor assembly	23	Suction bearings
5	Motor stator assembly	24	Suction bearings inner/outer spacer ring
6	Motor rotor washer	25	Oil guiding ring
7	Motor rotor spacer ring	26	Oil level sight glass
8	Oil separator Baffle	27	Oil filler cartridge
9	Oil separator cartridge	28	Suction filter
10	Piston	29	Oil heater
11	Piston spring	30	Refrigeration Lubricant
12	Piston rod	31	Suction flange
13	Bearing seat cover plate	32	Discharge flange
14	Modulation solenoid valve	33	Cable box
15	Modulation slide valve	34	Power bolt
16	Slide valve key	35	Thermostat terminals
17	Discharge bearings	36	Motor cable cover plate
18	Discharge fixed ring	37	Discharge check valve
19	Disc spring		

2.4 Design features

HANBELL screw compressors feature simple and robust construction by elimination of some components such as pistons, piston rings, valve plates, oil pumps which are found in reciprocating compressors. Without these components, screw compressors run with low noise level, minimized vibration, high reliability and durability. HANBELL screw compressors are of two-shaft rotary displacement design with the latest and advanced 5:6 patented screw rotors. Screw rotors are precisely installed with roller bearings, i.e. radial bearings at both suction and discharge ends as well as angular contact ball bearings i.e. axial bearings at discharge end. A three-phase, two-pole squirrel-cage induction motor drives the compressor. The motor rotor is located on the shaft of the male screw rotor. Cooling of the motor is achieved with suction refrigerant vapor.

Compressor technical features:

Full product range- RC2 series compressor consists of 26 models with displacement ranging from 98/118 m3/hr up to 1539/1847 m3/hr (50/60Hz) compatible for different refrigerants and applications.

Multinational patents of high-efficiency screw rotors- The new 5:6 high efficiency screw rotor profile is patented in Taiwan, UK, US, and China. This new large-volume, high-efficiency rotor profile is designed especially for modern refrigerant characteristics. High-efficiency screw rotors are accomplished by using precision CNC machining centers, rotor milling machines, rotor grinding machines. Strict ISO 9001 process controlling and the application of precise inspection equipments, such as ZEISS 3D coordinate measuring machines, ensure high-efficiency, high-quality, low-noise and low-vibration HANBELL RC2 series screw compressors.

High efficiency motor- Premium grade low-loss core steel with special motor cooling slot and refrigerant guide vane which pilot the cold suction refrigerant gas through the motor provides the highest operating efficiency possible no matter how strict operating conditions are.

Long life bearings and high reliability- The screw compressors utilize a combination of 10 axial and radial bearings and α axial balance piston to ensure longer bearing life and higher compressor reliability.

Double-walled rotor housing- Double casing structure with high strength inner ribs has been designed to minimize noise and ensure rigidity. The rotor housing is made of high-strength gray cast iron FC25 that is extremely stable, therefore no expansion will occur even at high-pressure condition. These casings are machined by computer aided machining centers and inspected by precision measuring machines to enhance reliability.

Direct flange-on oil separator- A vessel made of ductile material FC 500 specially designed to withstand high pressure and provide the highest efficiency of oil separation. Simple oil management, three-staged oil separator(models above RC2-1020), low-pressure-drop demister to ensure the minimum refrigerant dilution in the oil and maintain high oil viscosity.

Precise capacity control- The slide valve for capacity control is located in the compressor chamber. The slide valve is actuated by injection of pressurized oil into the cylinder from the oil sump as well as bypass of oil through solenoid valves in each oil lines with pressure differential.

Perceptive protection modules- RC2 series screw compressors are equipped with PTC thermistors and motor protection module which could monitor discharge and motor coil temperatures as well as phase sequence and phase loss. Accessories also include oil level switch to monitor the level of oil, pressure differential switch, and pressure relief valve for optional application.

Adaptable with additional cooling- Liquid injection connection port located at the motor casing and in the compression chamber, oil cooler connection port, and middle pressure economizer connection port for customer's desired application.

RC2 series compressors not only continue RC series compressors' characteristics of high efficiency & reliability design mentioned above, but are also designed with the following newly added advantages to meet customers' needs more adequately:

1. Design the fittest high-efficiency motor for respective refrigerant, operation condition and electrical power.
2. Dual capacity control of steps or continuous create more accurate and reliable mechanism (Option)
3. Part load effective economizer application.

Detailed description of new design features are given in the following chapters.

2.5 Compression process

(A) Suction and sealing:
At the beginning of the compression cycle, as the male rotor and female rotor unmesh, gas from suction port fills the interlobe space (refer to the dark area below). Refrigerant at suction pressure continues to fill it, until the trailing lobe crosses the suction area and the gas is trapped inside the interlobe space.

(B) Compression:
As the male rotor and female rotor meshes, the interlobe space moves towards to discharge end and its volume decreases so that gas pressure increases consequently.

(C) Discharge:
Gas is discharged from the interlobe space when the leading lobe crosses the discharge port whose volume ratio is designed differently for various applications.

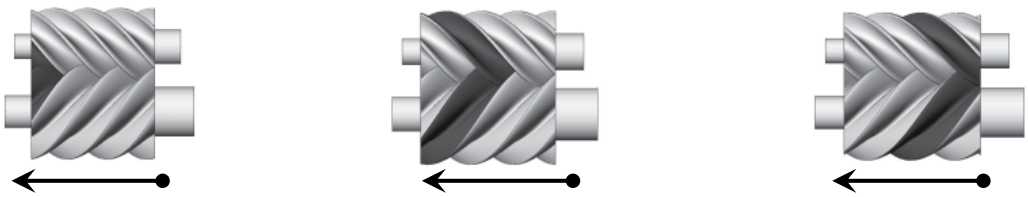

(C) Discharge **(B) Compression** **(A) Suction and sealing**

Figure 6 Compression process

2.6 Capacity control system

The RC2 series screw compressors are equipped with either 3-step/4-step capacity control system or continuous (step-less) capacity control system. Both of the capacity control systems consist of a modulation slide valve, piston rod, cylinder, piston and piston rings. The slide valve and the piston are connected by a piston rod. The principle of operation is using the oil pressure to drive the piston in the cylinder. See Figure 7, the lubrication oil flows from the oil sump through the oil filter cartridge and capillary then fills into the cylinder due to the positive oil pressure bigger than the right side of spring force plus the high pressure gas. The positive pressure differential causes the piston to move toward the right side in the cylinder. When the slide valve moves toward the right side, the effective compression volume in the compression chamber increases. This means the displacement of refrigerant gas also increases, as a result the refrigeration capacity also increases. However, when any of the step solenoid valve (for 3-step/4-step capacity control system) is opened, the high pressure oil in the cylinder bypasses to the suction side, which causes the piston and the slide valve to move toward the left side, and then some of the refrigerant gas bypasses from the compression chamber back to the suction end. As a result, the refrigeration capacity decreases because of the reduction of displacement of refrigerant gas flowing in the system.

The piston spring is used to push the piston back to its original position, i.e. minimum load position in order to reduce the starting current for the next starting. If the compressor started at full load capacity it may result in over current start. The capillary is used to maintain and restrain a suitable amount of oil flow into the cylinder. The modulation (stepless) solenoid valves (SV1 and SV2) are controlled by a micro controller or temperature switch to modulate the piston position smoothly with stable output of capacity.

If the oil filter cartridge, capillary, or modulation solenoid valves are not working well in the capacity control system, this may result in the abnormality and ineffectiveness of the capacity control system. **Before stopping the compressor, HANBELL strongly recommends that the unloading solenoid valve of stepless control system or minimum load solenoid valve of 3/4-step control system should be kept opened for 60~90 seconds so that oil pressure in the cylinder could be released. When starting the compressor again, it is in unloading position for light duty start.**

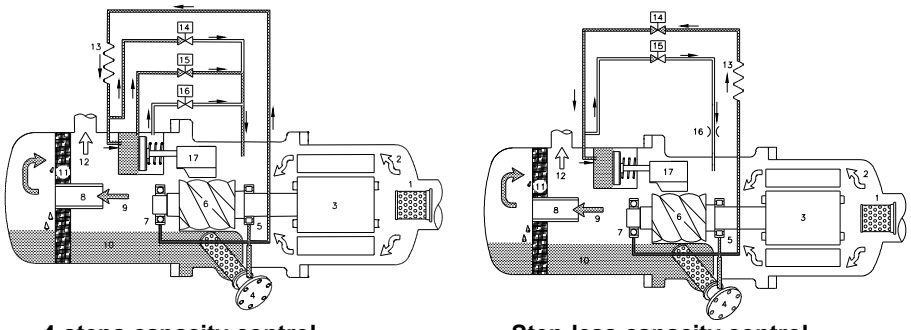

4-steps capacity control **Step-less capacity control**

Figure 7 Capacity control system

2.7 3 or 4-step capacity control system

There are two (For RC2-100, RC2-140, RC2-180) or three (for the rest 23 models) solenoid valves installed on the compressor that control the compressor capacity from minimum capacity (please refer to chapter 2.2 for different minimum capacity of each model) to full load (100%). There are two / three normally closed (NC) solenoid valves used to control the various required capacity. For the compressor with 3-step / 4-step capacity control system, it is usual to use the sequence of min.%-66%-100% / min.%-50%-75%-100% to load the capacity of compressor and to use the sequence of 100%-66%-min.%/100%-75%-50%-min% to unload the capacity. If min% capacity is kept for a long time, the problem of oil return, motor cooling, high discharge temperature need to be solved by adding accessories such as oil level switch for monitoring the oil level, liquid injection devices for cooling motor coil and reducing discharge temperature.(Figure 8). Min% is recommended for start and stop only, not for long-termed operation.

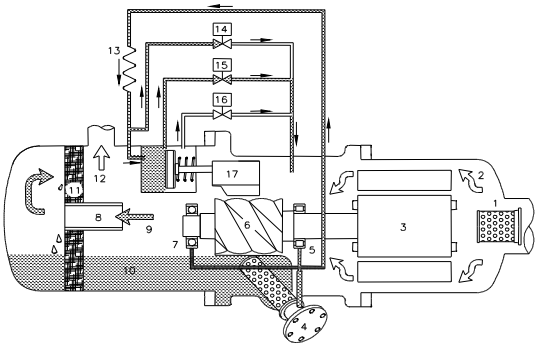

No.	Component	No.	Component	No.	Component
1	Suction filter	7	Discharge bearings	13	Capillary
2	Gas in（low pressure）	8	Oil separator baffle	14	Solenoid valve (min. %), SV 25%/33%
3	Motor	9	Gas out（high pressure with oil）	15	Solenoid valve (50% of full load),SV50%
4	Oil filter cartridge	10	Lubricant	16	Solenoid valve (75%/66% of full load),SV75%/66%
5	Suction bearings	11	Oil separator demister	17	Slide valve
6	Male rotor	12	Gas out(high pressure without oil)	*	For RC2-100, 140 & 180 the SV 50%omitted

Figure 8 4-step capacity control

RC2-100,140,180 capacity control system	SV33%(NC)	SV66%(NC)
100% of full load	not energized	not energized
66% of full load	not energized	energized
33%（for start）	energized	not energized

RC2-200~1530 capacity control system	SV25%(NC)	SV75%(NC)	SV50%(NC)
100% full load	not energized	not energized	not energized
75% of full load	not energized	energized	not energized
50% of full load	not energized	not energized	energized
25%（for start）	Energized	not energized	not energized

Note: For 3-step or 4-step capacity control system, Hanbell equips normally-closed (NC) solenoid valves as standard accessory. If normally-opened (NO) solenoid valves are preferred instead, please specify it to Hanbell when placing order.

a. min% capacity

When starting the compressor, SV25%/33% solenoid valve is energized and the piston is in min% capacity position, so even the oil coming from the oil sump is continuously injecting into the cylinder through the capillary, the high-pressured oil in the cylinder bypasses directly into the suction port, so the piston is kept in its initial position.

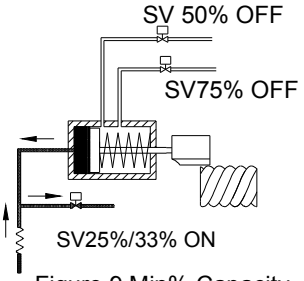

Figure 9 Min% Capacity

※It is strongly recommended to energize SV25%/33% solenoid valve for 1~3 minutes before starting the compressor to ensure the slide valve is in min% position.

b. 50% capacity (omitted for RC2-100, 140,180)

When SV50% solenoid valve is energized by the temperature controller, the high-pressure oil in the oil sump flows into the cylinder due to the closing of min% valve that pushes the piston moving toward the position where a hole at exactly 50% position drains the oil back to the suction side then the piston is held on that position.

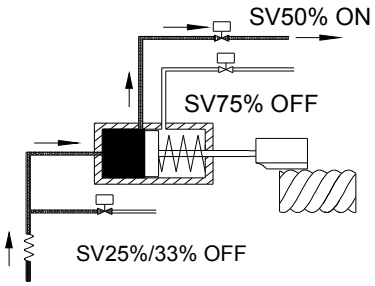

Figure 10 50% Capacity

c. 75%/66% capacity

When SV75%/66% solenoid valve is energized, SV50% solenoid valve will be de-energized simultaneously, the high pressure oil will push the piston toward the position where a hole at exactly 75%/66% position drains the oil back to the suction side and the piston will be held on that position.

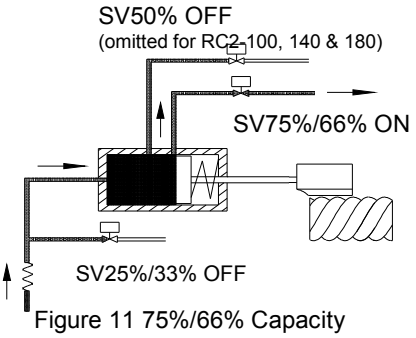

Figure 11 75%/66% Capacity

d. 100% full load

When all of two/three modulation solenoid valves are de-energized, the high-pressured oil flows into the cylinder continuously to push the piston toward the suction side gradually until the slide valve touches the end of the compression chamber and the piston also reaches its dead end entirely where no bypass of compression gas occurred. Therefore, full load is achieved.

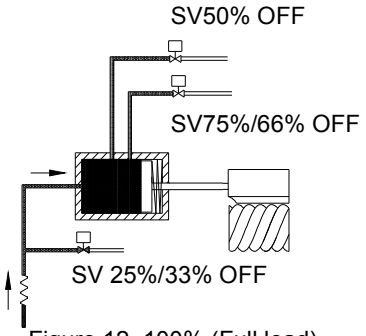

Figure 12 100% (Full load) Capacity

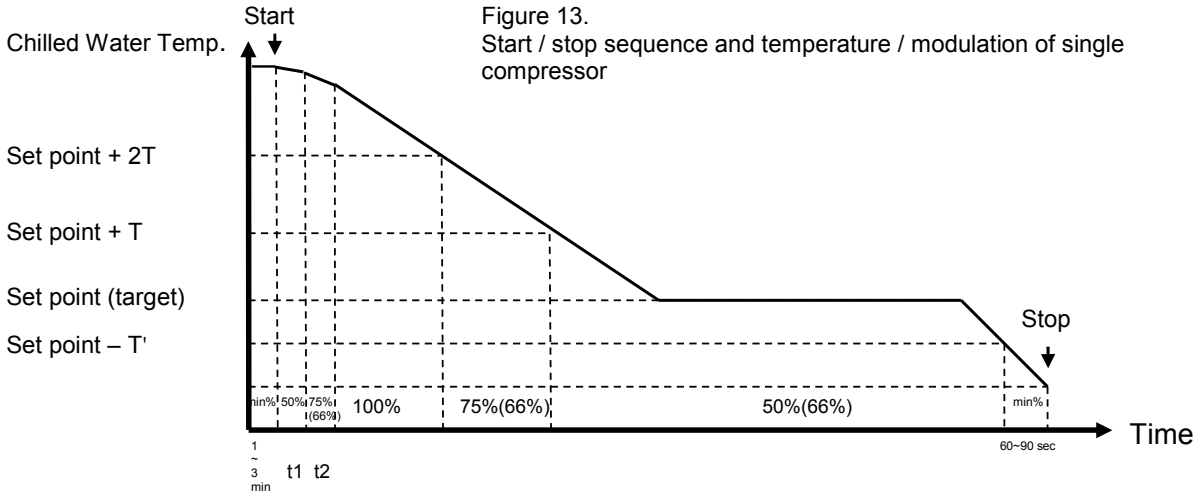

Figure 13.
Start / stop sequence and temperature / modulation of single compressor

※ It is strongly recommend to start /stop compressors as per above illustration

Note: 1. Above T & T' should be determined by system designer's experience and end user's application.
2. Above t1 & t2 should be longer than 60 sec as recommended.
3. Capacity control must be kept at min% capacity for 1~3 min before start and for 60~90 sec before stop.
4. Start the compressor at min% and SV50% can be energized right after start.

2.8 Continuous (stepless) capacity control system

In continuous (stepless) capacity control system, solenoid valve SV2 (for loading) and solenoid valve SV1 (for unloading) are equipped to inlet and outlet of piston cylinder respectively. These two solenoid valves are controlled by chiller temperature controller or micro controller so refrigeration capacity can be modulated anywhere within min% ~ 100%. Min% is recommended for start and stop only, not for long-termed operation.

It is very important for any controller to control loading and unloading in stable condition. For a smooth modulation, HANBELL installs a capillary in loading oil line and an additional orifice valve in unloading oil line to avoid too fast loading and unloading.

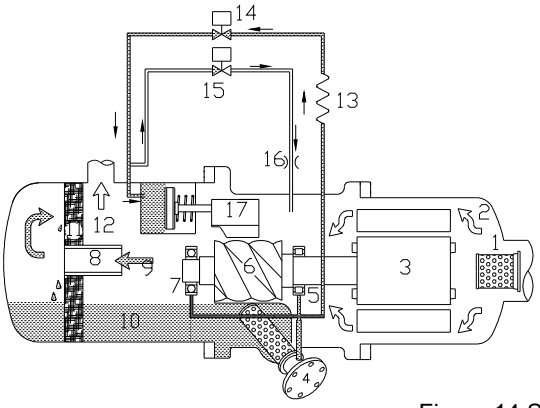

No.	Component	No.	Component	No.	Component
1	Suction filter	7	Discharge bearings	13	Capillary
2	Gas in（low pressure）	8	Oil separator baffle	14	Solenoid valve, SV2
3	Motor	9	Gas out（high pressure with oil）	15	Solenoid valve, SV1
4	Oil filter cartridge	10	Lubricant	16	Orifice
5	Suction bearings	11	Oil separator cartridge	17	Slide valve
6	Male rotor	12	Gas out (high pressure without oil)		

Figure 14 Stepless capacity control

Note: 1. In continuous (stepless) capacity control system, Hanbell installs two normally closed solenoid valves as standard accessory. If it is necessary to be equipped with other type of solenoid valves, please specify it when placing orders.
2. If customers prefer to remove unloading orifice or equip with loading orifice for system application, please specify it when placing orders
3. Normally opened solenoid valve SV2 (for loading) is an option.

	SV1(NC) Standard	SV2(NC) Standard	SV2(N0) Option
Start	energized	not energized	energized
Loading	not energized	energized	not energized
Unloading	energized	not energized	energized
Stable	not energized	not energized	energized

Capacity Modulation	NC SV2 (Standard)	NO SV2 (Option)
a. Loading Standard: When NC SV2 is energized but NC SV1 is not energized, oil will be injected continuously into piston cylinder and will not bypass through NC SV1 so compressor keeps loading. Option: When both NO SV2 and NC SV1 are not energized, oil will be injected continuously into piston cylinder and will not bypass through NC SV1 so compressor keeps loading.	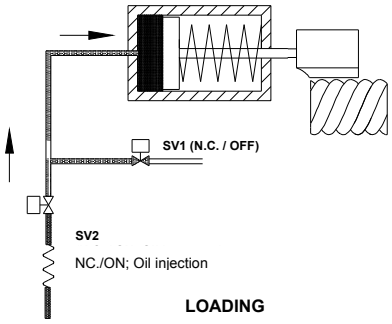	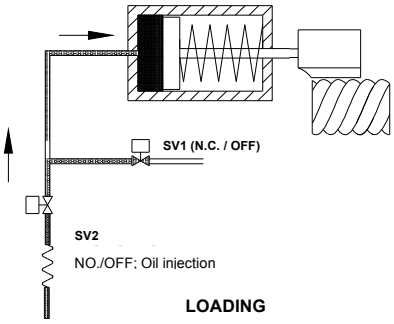
b. Unloading Standard: When NC SV1 is energized but NC SV2 is not energized, oil inside piston cylinder will bypass to suction port through NC SV1. Option: When both NO SV2 and NC SV1 are energized, oil inside piston cylinder will bypass to suction port through NC SV1.	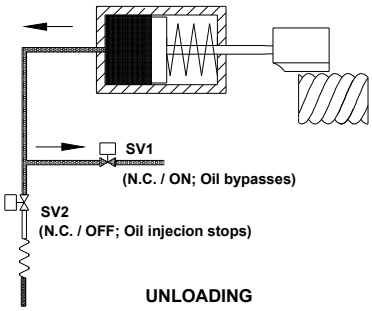	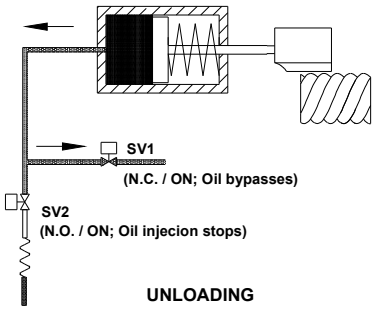

c. Stable/Holding Standard: When both NC SV2 and NC SV1 are not energized, piston can be held in stable/holding position. Option: When NO SV2 is energized but NC SV1 is not energized, piston can be held in stable/holding position.	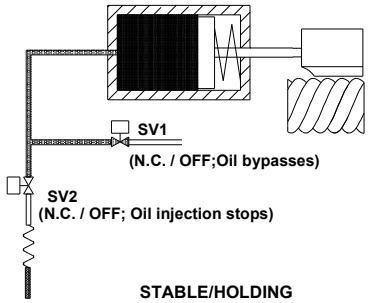	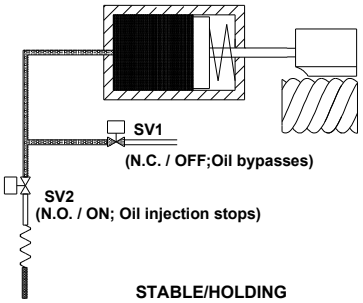

Continuous /stepless capacity control principle

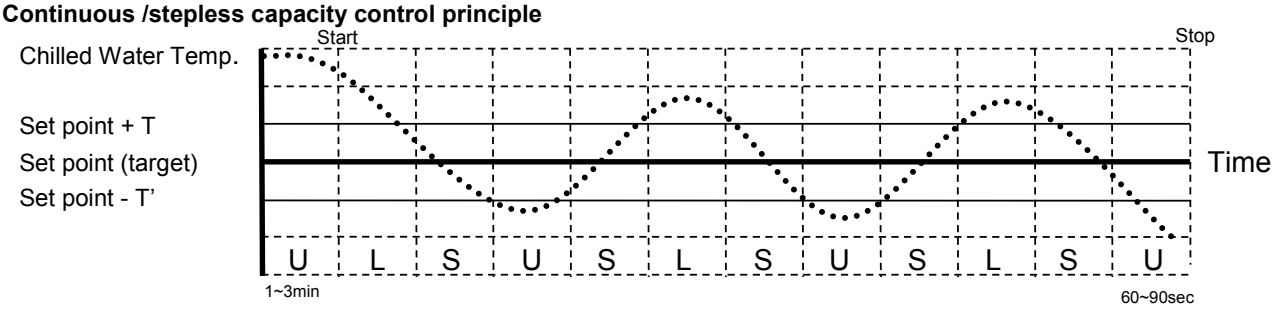

- - - - - Chilled water temperature
U - Unloading
S - Stable(holding)
L - Loading

Note: 1. Above T. & T' should be determined by system designer's experience and end user's application.
2. Capacity control must be kept at unloading for 1~3 min before start and for 60~90 sec before stop.

Loading/unloading functions

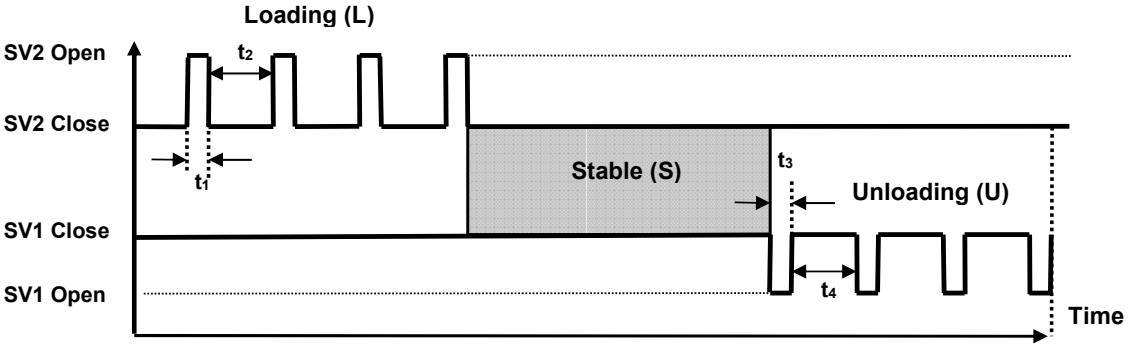

Figure 15 Loading and unloading functions

t_1, t_3: Pulse time 1 ~ 1.5 seconds
t_2, t_4: Pause time 15 ~ 20 seconds

2.9 Dual capacity control system (optional)

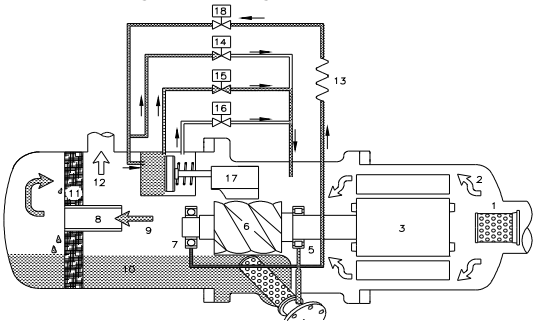

Figure 16 Dual capacity control

No.	Component	No.	Component	No.	Component
1	Suction filter	7	Discharge bearings	13	Capillary
2	Gas in（low pressure）	8	Oil separator baffle	14	Solenoid valve
3	Motor	9	Gas out（high pressure with oil）	15	Solenoid valve
4	Oil filter cartridge	10	Lubricant	16	Solenoid valve
5	Suction bearings	11	Oil separator cartridge	17	Slide valve
6	Male rotor	12	Gas out (high pressure without oil)	18	Solenoid valve

Hanbell can provide compressors with capacity as shown in the figure 16, and its control logic is the same as those shown in chapter 2.7 and 2.8.

2.10 Compressor volume ratio (Vi)

The volume ratio **(Vi)** of the compressor can be defined as the ratio of suction volume to discharge volume in the compressor. The smaller the concavity of slide valve in the discharge end, the larger the volume ratio. The volume ratio directly affects the internal compression ratio (Pi). Low Vi corresponds to low Pi and high Vi corresponds to high Pi. In the equation below, in order to prevent over or under compression, the system compression ratio **(CR)** should be equal to compressor's internal compression ratio **(Pi)**. Please refer to P-V (pressure – volume) diagram below to figure out this relation.

CR = Pd/Ps
Pi = Vi ^{k}
Vi = Vs/Vd

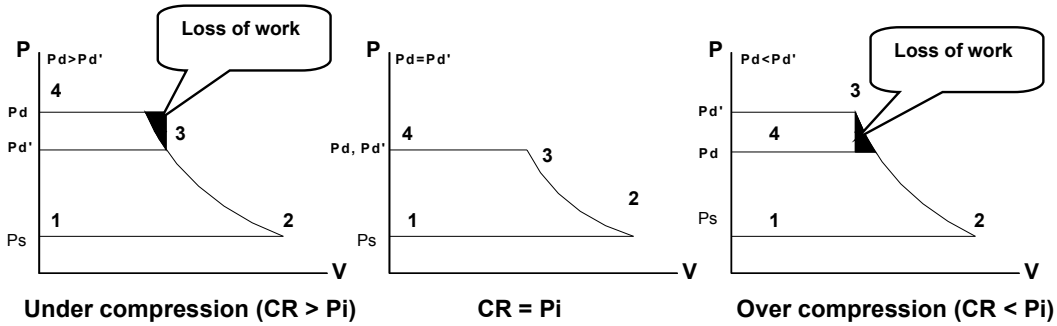

Figure 17 P-V Diagram

Where:
CR: system compression ratio
Pi: internal compression ratio
Vi: internal volume ratio
Pd: system pressure (absolute pressure)
Pd': discharge pressure (absolute pressure)
Ps: suction pressure (absolute pressure)
Vs: suction volume
Vd: discharge volume
K: refrigerant specific heat ratio

2.11 Application limits

Application limits of the compressor vary significantly with the type of refrigerant used. The operating limits shown below are based on saturated suction and discharge operating conditions, for continuous operation over extended periods of time. It is important to operate within these limits to maintain proper compressor life. Operating at extra low saturated suction temperature, may cause oil management and motor cooling problems, and operating at extra high saturated condensing temperature will shorten the compressor life due to insufficient motor and compressor chamber cooling.

a. Application limits of RC2-100~RC2-930 are described on the respective refrigerant charts.

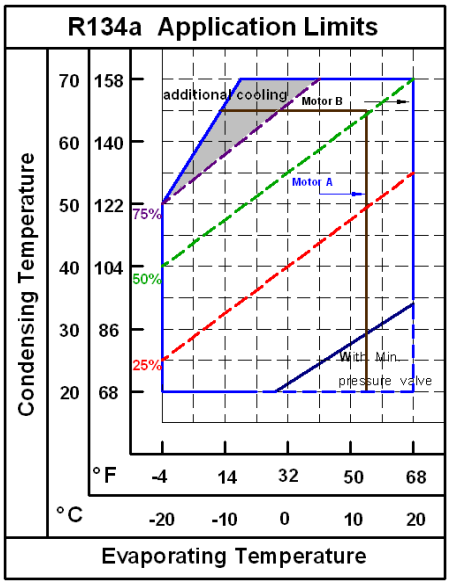

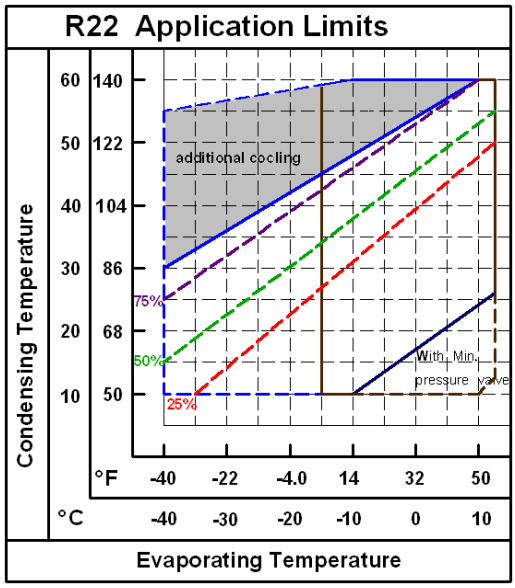

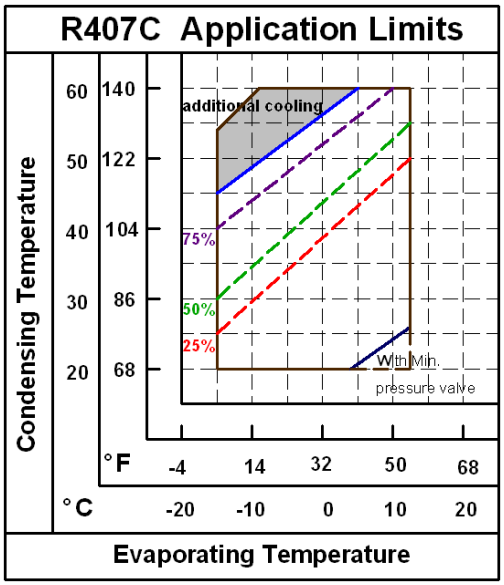

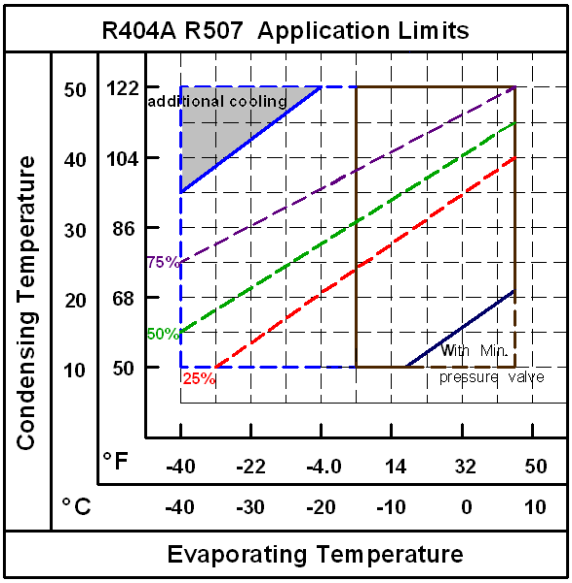

R1234yf

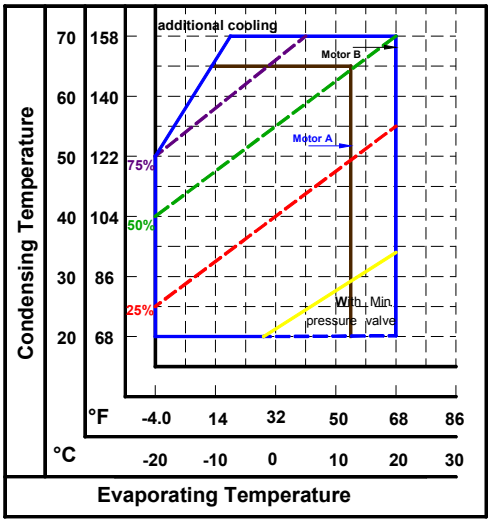

R1234ze

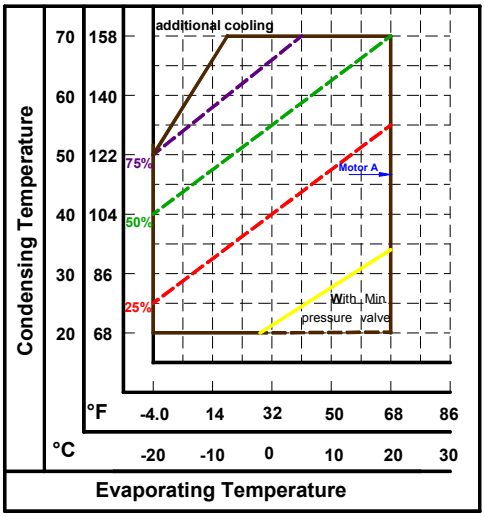

b. Application limits of of RC2-1020~RC2-1530 are described on the respective refrigerant charts.

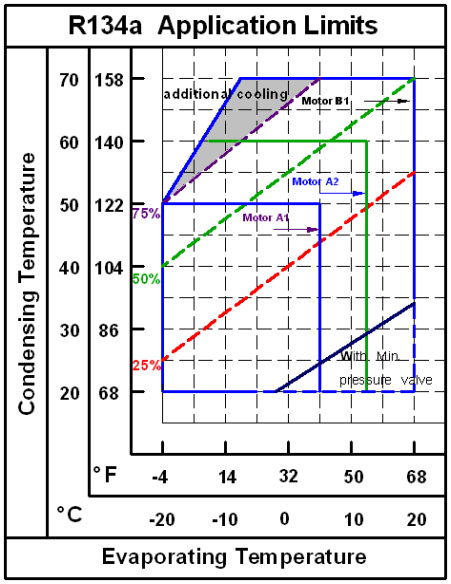

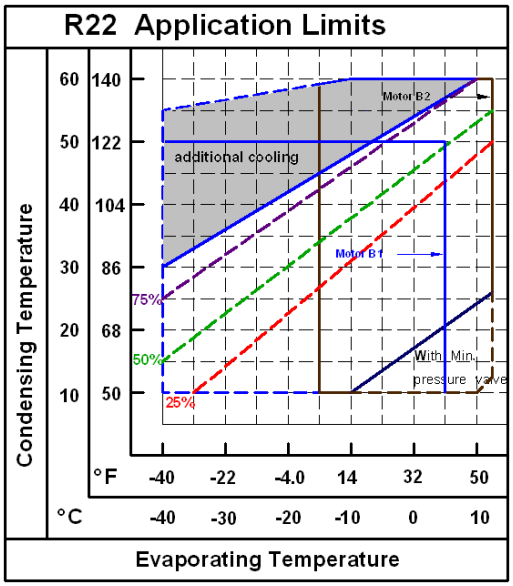

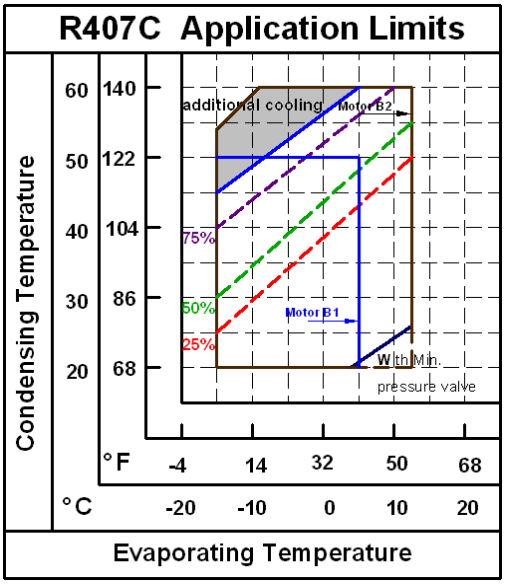

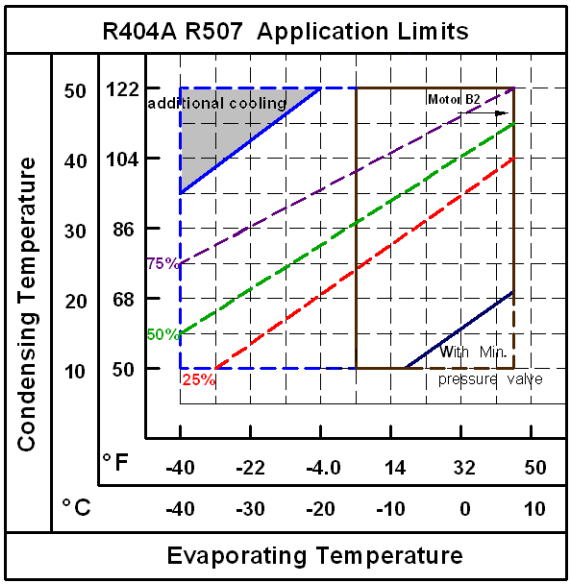

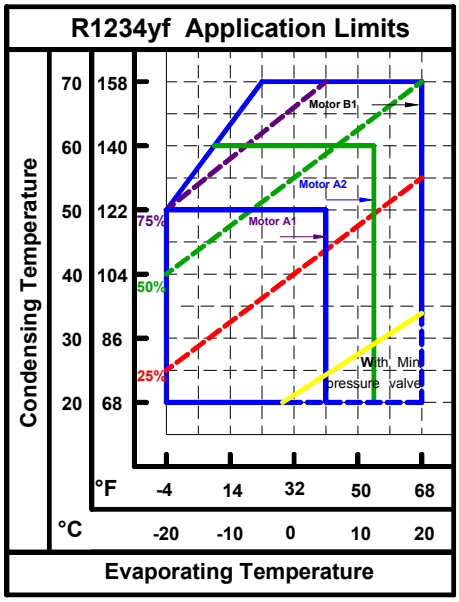

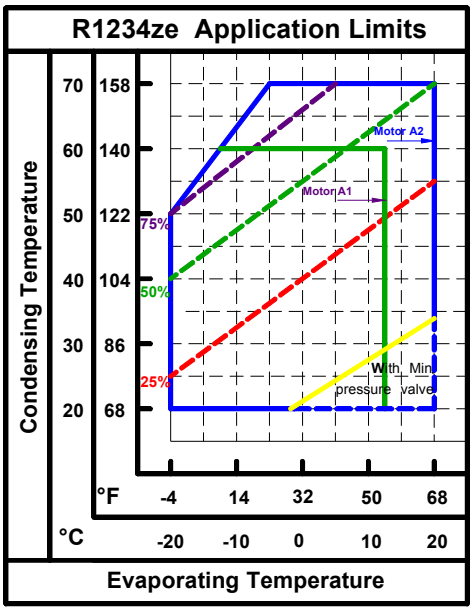

Note:

1. When Hanbell screw compressor operate in partial or full load within limits, temperature of motor coil and discharge will rise concurrently. In order to keep the safe running of compressor continuously , Hanbell recommend application of the following additional cooling devices :

   (1) Oil cooler or (2) Liquid injection to chamber or (3) Liquid injection to motor.

   Please refer to Hanbell selection software for application of additional cooling system.

   Hanbell recommends monitoring oil pressure differential and keep it 4 kg/cm^2G over the suction pressure for adequate seal, lubrication and capacity control by pressure differential switch passively or by additional oil pump or minimum pressure valve actively. Especially under operation conditions with low condensing temperature and high evaporating temperature like application in flooder water-cooled chillers, high-low pressure difference tends to be less than 4 kg/cm^2G , installation of oil pump is recommended to ensure regular oil pressure.

   Contact with Hanbell to verify potential operating conditions outside the limits shown.

2. If compressors run continuously at partial load below 50%, failure of motor coils might happen due to insufficient cooling. Therefore, Hanbell emphasizes installation of liquid injection system to motor to make sure adequate cooling of motor coils for safe running of compressors. According to EN12900, suction superheat is 10°k and liquid sub-cooling is 0°k.

3. The minimum discharge superheat is recommended to be kept 10°k higher than the condensing temperature (normally discharge superheat is around 20°K for R134a and 30°K for R22, R407C) to avoid liquid filling back to compressor and lubrication failure.

2.12 MCC and LRA

Refrigerant : R134a, R1234yf, R1234ze (Y-△)

Model	50Hz						60Hz															
	380V		400V		415V		208V		220V		230V		380V		440V		460V		480V		575V	
	MCC	LRA (Y/△)	MCC	LRA (Y/△)	MCC	LRA (Y/△)	MCC	LRA (Y/△)	MCC	LRA (Y/△)	MCC	LRA (Y/△)	MCC	LRA (Y/△)	MCC	LRA (Y/△)	MCC	LRA (Y/△)	MCC	LRA (Y/△)	MCC	LRA (Y/△)
RC2-100A	53	58/175	50	60/ 180	49	55/165	115	127/380	109	117/350	104	120/360	63	70/210	55	58/175	52	60/180	50	55/165	42	48/145
RC2-140A	73	77/230	70	80/240	67	73/220	160	175/525	151	153/460	145	160/480	88	97/290	76	77/230	72	80/240	69	73/220	58	63/190
RC2-180A	97	103/310	92	108/325	89	98/295	213	230/690	202	198/595	193	207/620	117	125/375	101	103/310	96	108/325	92	98/295	77	85/255
RC2-200A	103	103/310	98	108/325	94	98/295	226	230/690	214	198/595	204	207/620	124	125/375	107	103/310	102	108/325	98	98/295	82	85/255
RC2-230A	124	160/480	117	167/500	113	155/465	270	360/1080	256	302/905	244	315/945	148	200/600	128	160/480	122	167/500	117	155/465	98	125/375
RC2-260A	138	160/480	131	167/500	126	155/465	302	360/1080	286	302/905	273	315/945	165	200/600	143	160/480	137	167/500	131	155/465	109	125/375
RC2-300A	155	200/600	147	208/625	142	180/540	340	462/1385	322	375/1125	308	392/1175	186	245/735	161	200/600	154	208/625	147	180/540	123	157/470
RC2-310A	163	200/600	155	208/625	149	180/540	360	462/1385	341	375/1125	326	392/1175	197	245/735	170	200/600	163	208/625	156	180/540	130	157/470
RC2-320A	167	200/600	158	208/625	153	180/540	366	462/1385	346	375/1125	331	392/1175	200	245/735	173	200/600	165	208/625	158	180/540	132	157/470
RC2-340A	178	230/690	169	240/720	163	218/655	388	503/1510	367	460/1380	351	480/1440	213	270/810	184	230/690	176	240/720	168	218/655	140	182/545
RC2-370A	194	230/690	185	240/720	178	218/655	426	503/1510	403	460/1380	386	480/1440	233	270/810	202	230/690	193	240/720	185	218/655	154	182/545
RC2-410A	216	233/700	205	243/730	198	230/690	—	—	—	—	—	—	260	273/820	224	233/700	215	243/730	206	230/690	172	183/550
RC2-430A	230	233/700	218	243/730	211	230/690	—	—	—	—	—	—	277	273/820	239	233/700	229	243/730	219	230/690	183	183/550
RC2-470A	248	270/810	236	282/845	227	265/795	—	—	—	—	—	—	300	328/985	259	270/810	248	282/845	238	265/795	198	220/660
RC2-510A	271	270/810	258	282/845	248	265/795	—	—	—	—	—	—	327	328/985	282	270/810	270	282/845	259	265/795	216	220/660
RC2-550A	292	292/875	277	305/915	267	283/850	—	—	—	—	—	—	350	372/1115	302	292/875	289	305/915	277	283/850	231	250/750
RC2-580A	304	292/875	288	305/915	278	283/850	—	—	—	—	—	—	365	372/1115	316	292/875	302	305/915	289	283/850	242	250/750
RC2-620A	317	407/1220	301	428/1285	290	387/1160	—	—	—	—	—	—	381	482/1445	329	407/1220	315	428/1285	301	387/1160	252	323/970
RC2-710A	365	447/1340	347	467/1400	334	432/1295	—	—	—	—	—	—	439	583/1750	379	447/1340	363	467/1400	348	432/1295	290	373/1120
RC2-790A	404	477/1430	384	498/1495	370	457/1370	—	—	—	—	—	—	486	643/1930	420	477/1430	402	498/1495	385	457/1370	321	388/1165
RC2-830A	422	522/1565	401	545/1635	387	495/1485	—	—	—	—	—	—	507	728/2185	438	522/1565	419	545/1635	402	495/1485	335	462/1385
RC2-930A	490	663/1990	465	693/2080	448	617/1850	—	—	—	—	—	—	589	823/2470	509	663/1990	487	693/2080	466	617/1850	389	555/1665
RC2-1020A(A1)	360	583/1750	342	613/1840	330	537/1610							434	763/2290	374	583/1750	358	613/1840	343	537/1610	287	493/1480
RC2-1020A(A2)	536	753/2260	510	793/2380	491	690/2070							645	945/2835	557	753/2260	533	793/2380	510	690/2070	426	635/1905
RC2-1130A(A1)	395	583/1750	375	613/1840	362	537/1610							475	763/2290	410	583/1750	393	613/1840	376	537/1610	314	493/1480
RC2-1130A(A2)	588	753/2260	559	793/2380	538	690/2070							709	945/2835	612	753/2260	585	793/2380	561	690/2070	468	635/1905
RC2-1270A(A1)	457	753/2260	434	793/2380	419	690/2070							550	943/2830	475	753/2260	455	793/2380	436	690/2070	364	635/1905
RC2-1270A(A2)	682	888/2665	648	935/2805	624	782/2345							820	1168/3505	708	888/2665	677	935/2805	649	782/2345	542	717/2150
RC2-1530A(A1)	517	753/2260	491	793/2380	474	690/2070							623	943/2830	538	753/2260	514	793/2380	493	690/2070	411	635/1905
RC2-1530A(A2)	770	888/2665	732	935/2805	705	782/2345							927	1168/3505	800	888/2665	766	935/2805	734	782/2345	613	717/2150

Refrigerant : R134a, R1234yf, R1234ze (PWS)

Model	50Hz						60Hz															
	380V		400V		415V		208V		220V		230V		380V		440V		460V		480V		575V	
	MCC	LRA (△/△△)	MCC	LRA (△/△△)	MCC	LRA (△/△△)	MCC	LRA (△/△△)	MCC	LRA (△/△△)	MCC	LRA (△/△△)	MCC	LRA (△/△△)	MCC	LRA (△/△△)	MCC	LRA (△/△△)	MCC	LRA (△/△△)	MCC	LRA (△/△△)
RC2-100A	53	79/165	50	84/175	49	74/155	115	170/355	109	156/325	104	166/345	63	86/190	55	79//165	52	84/175	50	74/155	42	62/130
RC2-140A	73	108/225	70	113/235	67	101/210	160	238/495	151	211/440	145	221/460	88	125/160	76	108/225	72	110/230	69	101/210	58	79/165
RC2-180A	97	155/310	92	163/325	89	145/290	213	338/675	202	305/610	193	320/640	117	185/370	101	155/310	96	163/325	92	145/290	77	118/235
RC2-200A	103	155/310	98	163/325	94	145/290	226	338/675	214	305/610	204	320/640	124	185/370	107	155/310	102	163/325	98	148/295	82	118/235
RC2-230A	124	303/505	117	285/475	113	267/445	270	645/1075	256	618/1030	244	573/955	148	360/600	128	303/505	122	285/475	117	267/445	98	237/395
RC2-260A	138	303/505	131	285/475	126	267/445	302	645/1075	286	618/1030	273	573/955	165	360/600	143	303/505	137	285/475	131	267/445	109	237/395
RC2-300A	155	350/565	147	329/530	142	322/520	340	822/1325	322	763/1230	308	704/1135	186	428/690	161	350/565	154	329/530	147	322/520	123	273/440
RC2-310A	163	350/565	155	329/530	149	322/520	360	822/1325	341	763/1230	326	704/1135	197	428/690	170	350/565	163	329/530	156	322/520	130	276/445
RC2-320A	167	350/565	158	329/530	153	322/520	366	822/1325	346	763/1230	331	704/1135	200	428/690	173	350/565	165	329/530	158	322/520	132	276/445
RC2-340A	178	462/710	169	423/650	163	410/630	388	943/1450	367	868/1335	351	920/1415	213	546/840	184	462/710	176	423/650	168	410/630	140	358/550
RC2-370A	194	462/710	185	423/650	178	410/630	426	943/1450	403	868/1335	386	920/1415	233	546/840	202	462/710	193	423/650	185	410/630	154	358/550
RC2-410A	216	475/730	205	497/765	198	429/660	—	—	—	—	—	—	260	553/850	224	475/730	215	497/765	206	429/660	172	374/575
RC2-430A	230	475/730	218	497/765	211	429/660	—	—	—	—	—	—	277	553/850	239	475/730	229	497/765	219	429/660	183	374/575
RC2-470A	248	571/840	236	598/880	227	513/755	—	—	—	—	—	—	300	677/995	259	571/840	248	598/880	238	513/755	198	439/645
RC2-510A	271	571/840	258	598/880	248	513/755	—	—	—	—	—	—	327	677/995	282	571/840	270	598/880	259	513/755	216	439/645
RC2-550A	292	615/905	277	646/950	267	596/875	—	—	—	—	—	—	350	779/1145	302	615/905	289	646/950	277	595/875	231	476/700
RC2-580A	304	615/905	288	646/950	278	595/875	—	—	—	—	—	—	365	779/1145	316	615/905	302	646/950	289	595/875	242	476/700

Refrigerant : R22, R407C, R404A, R507, R134a (Y-△)

Model	50Hz						60Hz																		Unit: Ampere
	380V		400V		415V		208V		220V		230V		380V		440V		460V		480V		575V	
	MCC	LRA (Y/△)	MCC	LRA (Y/△)	MCC	LRA (Y/△)	MCC	LRA (Y/△)	MCC	LRA (Y/△)	MCC	LRA (Y/△)	MCC	LRA (Y/△)	MCC	LRA (Y/△)	MCC	LRA (Y/△)	MCC	LRA (Y/△)	MCC	LRA (Y/△)
RC2-100B	69	77/230	65	80/240	63	73/220	151	175/525	142	153/460	136	160/480	82	97/290	71	77/230	68	80/240	65	73/220	54	63/190
RC2-140B	91	103/310	87	108/325	84	98/295	199	230/690	188	198/595	180	207/620	109	125/375	94	103/310	90	108/325	86	98/295	72	85/255
RC2-180B	121	155/465	115	162/485	110	148/445	263	362/1085	249	310/930	238	323/970	144	192/575	124	155/465	119	162/485	114	148/445	95	127/380
RC2-200B	128	155/465	122	162/485	117	148/445	282	362/1085	266	310/930	255	323/970	154	192/575	133	155/465	127	162/485	122	148/445	102	127/380
RC2-230B	153	230/690	146	240/720	140	218/655	336	503/1510	318	460/1380	304	480/1440	184	270/810	159	230/690	152	240/720	146	218/655	122	182/545
RC2-260B	171	230/690	163	240/720	157	218/655	376	503/1510	355	460/1380	340	480/1440	206	270/810	178	230/690	170	240/720	163	218/655	136	182/545
RC2-300B	193	260/780	183	272/815	177	263/790	424	653/1960	401	520/1560	384	543/1630	232	343/1030	200	260/780	192	272/815	184	263/790	153	223/670
RC2-310B	203	260/780	193	272/815	186	263/790	446	653/1960	421	520/1560	403	543/1630	244	343/1030	211	260/780	201	272/815	193	263/790	161	223/670
RC2-320B	207	260/780	196	272/815	189	263/790	456	653/1960	431	520/1560	413	543/1630	250	343/1030	216	260/780	206	272/815	198	263/790	165	223/670
RC2-340B	220	345/1035	209	360/1080	201	313/940	483	720/2160	457	662/1985	437	692/2075	264	407/1220	228	345/1035	218	360/1080	209	313/940	175	272/815
RC2-370B	241	345/1035	229	360/1080	221	313/940	529	720/2160	500	662/1985	478	692/2075	289	407/1220	250	345/1035	239	360/1080	229	313/940	191	272/815
RC2-410B	268	292/875	254	305/915	245	283/850	–	–	–	–	–	–	323	372/1115	279	292/875	267	305/915	256	283/850	214	250/750
RC2-470B	310	407/1220	294	428/1285	284	387/1160	–	–	–	–	–	–	372	482/1445	321	407/1220	307	428/1285	294	387/1160	246	323/970
RC2-510B	336	443/1330	319	463/1390	308	417/1250	–	–	–	–	–	–	406	535/1605	350	443/1330	335	463/1390	321	417/1250	268	382/1145
RC2-550B	355	443/1330	337	463/1390	325	417/1250	–	–	–	–	–	–	426	535/1605	368	443/1330	352	463/1390	338	417/1250	282	382/1145
RC2-580B	377	443/1330	358	463/1390	345	417/1250	–	–	–	–	–	–	454	535/1605	392	443/1330	375	463/1390	359	417/1250	300	382/1145
RC2-620B	393	503/1510	374	527/1580	360	468/1405	–	–	–	–	–	–	473	627/1880	409	503/1510	391	527/1580	375	468/1405	313	422/1265
RC2-710B	453	663/1990	430	693/2080	415	617/1850	–	–	–	–	–	–	545	823/2470	471	663/1990	450	693/2080	432	617/1850	360	555/1665
RC2-790B	498	743/2230	473	777/2330	456	682/2045	–	–	–	–	–	–	598	958/2875	516	743/2230	494	777/2330	473	682/2045	395	600/800
RC2-830B	534	785/2355	508	827/2480	489	863/2590	–	–	–	–	–	–	643	1067/3200	555	785/2355	531	827/2480	509	863/2590	425	658/1975
RC2-930B	620	875/2625	589	915/2745	567	955/2865	–	–	–	–	–	–	746	1247/3740	644	875/2625	616	915/2745	591	955/2865	493	765/2295
RC2-1020B(B1)	611	888/2665	580	935/2805	559	782/2345							735	1168/3505	635	888/2665	607	935/2805	582	782/2345	486	717/2150
RC2-1020B(B2)	684	1085/3255	650	1142/3425	626	920/2760							823	1290/3870	710	1085/3255	680	1142/3425	651	920/2760	544	868/2605
RC2-1130B(B1)	671	888/2665	637	935/2805	614	782/2345							806	1168/3505	697	888/2665	666	935/2805	638	782/2345	533	717/2150
RC2-1130B(B2)	766	1085/3255	728	1142/3425	702	920/2760							922	1290/3870	796	1085/3255	762	1142/3425	730	920/2760	609	868/2605
RC2-1270B(B1)	777	1085/3255	738	1142/3425	711	920/2760							934	1290/3870	807	1085/3255	772	1142/3425	740	920/2760	617	868/2605
RC2-1270B(B2)	864	1338/4015	820	1160/3480	791	1213/3640							1038	1573/4720	896	1338/4015	857	1160/3480	821	1213/3640	686	1292/3875
RC2-1530B(B1)	878	1085/3255	834	1142/3425	804	920/2760							1056	1290/3870	912	1085/3255	873	1142/3425	836	920/2760	698	868/2605
RC2-1530B(B2)	996	1393/4180	946	1195/3585	912	1263/3790							1199	1633/4900	1035	1393/4180	990	1195/3585	949	1263/3790	792	957/2870

Refrigerant : R22, R407C, R404A, R507, R134a (PWS)

Model	50Hz						60Hz																Unit: Ampere
	380V		400V		415V		208V		220V		230V		380V		440V		460V		480V		575V	
	MCC	LRA (△/△△)	MCC	LRA (△/△△)	MCC	LRA (△/△△)	MCC	LRA (△/△△)	MCC	LRA (△/△△)	MCC	LRA (△/△△)	MCC	LRA (△/△△)	MCC	LRA (△/△△)	MCC	LRA (△/△△)	MCC	LRA (△/△△)	MCC	LRA (△/△△)
RC2-100B	69	108/225	65	113/235	63	101/210	151	238/495	142	211/440	136	221/460	82	125/260	71	108/225	68	113/235	65	101/210	54	82/170
RC2-140B	91	155/310	87	163/325	84	145/290	199	338/675	188	305/610	180	320/640	109	185/370	94	155/310	90	163/325	86	145/290	72	118/235
RC2-180B	121	225/425	115	239/450	110	207/390	263	480/905	249	444/840	238	466/880	144	254/480	124	225/425	119	239/450	114	207/390	95	172/325
RC2-200B	128	225/425	122	239/450	117	207/390	282	480/905	266	445/840	255	466/880	154	254/480	133	225/425	127	239/450	122	207/390	102	172/325
RC2-230B	153	350/565	146	329/530	140	322/520	336	822/1325	318	763/1230	304	704/1135	184	428/690	159	350/565	152	329/530	146	322/520	122	273/440
RC2-260B	171	462/710	163	423/650	157	410/630	376	943/1450	355	868/1335	340	920/1415	206	546/840	178	462/710	170	423/650	163	410/630	136	358/550
RC2-300B	193	507/780	183	497/765	177	481/740	424	1260/1940	401	1121/1725	384	1004/1545	232	614/945	200	507/780	192	497/765	184	481/740	153	403/620
RC2-310B	203	507/780	193	497/765	186	481/740	446	1261/1940	421	1121/1725	403	1004/1545	244	614/945	211	507/780	201	497/765	193	481/740	161	403/620
RC2-320B	207	507/780	196	497/765	189	481/740	456	1261/1940	431	1121/1725	413	1004/1545	250	614/945	216	507/780	206	497/765	198	481/740	165	403/620
RC2-340B	220	663/1020	209	640/985	201	608/935	483	1628/2505	457	1342/2065	437	1495/2300	264	777/1195	228	663/1020	218	640/985	209	608/935	175	527/810
RC2-370B	241	663/1020	229	640/985	221	608/935	529	1628/2505	500	1342/2065	478	1495/2300	289	777/1195	250	663/1020	239	640/985	229	608/935	191	527/810
RC2-410B	268	615/905	254	646/950	245	595/875	–	–	–	–	–	–	323	779/1145	279	615/905	267	646/950	256	595/875	214	476/700
RC2-470B	310	870/1280	294	915/1345	284	826/1215	–	–	–	–	–	–	372	1030/1515	321	870/1280	307	915/1345	294	826/1215	246	690/1015
RC2-510B	336	952/1400	319	996/1465	308	891/1310	–	–	–	–	–	–	406	1142/1680	350	952/1400	335	996/1465	321	891/1310	268	816/1200
RC2-550B	336	952/1400	319	996/1465	308	891/1310	–	–	–	–	–	–	406	1142/1680	350	952/1400	335	996/1465	321	891/1310	268	816/1200
RC2-580B	377	952/1400	358	996/1465	345	891/1310	–	–	–	–	–	–	454	1142/1680	392	952/1400	375	996/1465	359	891/1310	300	816/1200

3. Lubricants

The main functions of lubrication oil in screw compressors are lubrication, internal sealing, cooling and capacity control. Positive oil pressure in the cylinder pushes the piston together with the slide valve that is connected by a piston rod to move forward and backward in the compression chamber. The design of positive pressure differential lubrication system makes RC2 series normally omit an extra oil pump which is necessary for reciprocating compressors. However, in some special applications, it is still necessary to install an extra oil pump to screw compressors for safety.

Bearings used in RC2 series compressors require a small and steady quantity of oil for lubrication. Oil injection into the compression chamber creates a film of oil for sealing in the compression housing to increase efficiency and also can dissipate part of compression heat. In order to separate oil from refrigerant gas, an oil separator is required to ensure the least amount of oil carried into the system.

Please pay more attention to the oil temperature, which is crucial to compressor bearings' life. Oil is with much lower viscosity at high temperatures. Too low viscosity of oil will result in poor lubrication and heat dissipation in the compressor. Viscosity is recommended to keep over 10mm^2/s at any temperatures for oil. Oil temperature in the oil sump should be kept above the saturated condensing temperature to prevent refrigerant migration into lubrication system. Oil has a higher viscosity in low ambient temperature circumstances. When viscosity is too high, slow flow speed of oil into the cylinder may result in too slow loading of the compressor. To solve this problem, use of oil heaters can warm up oil before starting.

If the compressor operates under critical operating conditions, an extra oil cooler is required – please refer to Hanbell selection software for the required capacity and oil flow of the extra oil cooler. High-viscosity oil is recommended to apply in high operating conditions because high discharge temperature will make viscosity of oil lower. Oil return from the evaporator may be insufficient in refrigeration systems, flooded chillers…etc., in which it's difficult for oil to be carried back and it may cause oil loss in the compressor. If the system encounters the oil return problem then an extra 2nd oil separator is recommended to be installed between the compressor discharge tube and condenser.

Each of HANBELL RC2-230 ~ RC2-930 compressors is equipped with two oil sight glasses as a standard (the second sight glass is optional for the models RC2-100 ~ RC2-200), one is the high-level sight glass, and the other is the low-level sight glass (RC2-230~RC2-510, RC2-580 and RC2-1020~RC2-1530) or internal oil line sight glass (RC2-550 & RC2-620~RC2-930). The function of internal oil line sight glass is to monitor lubricant flow to capacity control system and bearings. While reverse running, it is unable to see the oil flow via sight glass. The normal oil level in the compressor oil sump should be maintained above the top of the low-level sight glass and in the middle level of high-level sight glass when compressor is running. It is strongly recommended to install the oil level switch (optional accessory) to prevent the failure results from lose of oil.

3.1 Lubricants table

Applicable oil types (R22)

SPECIFICATION		UNITS	HBR -B10	HBR -A02	HBR -A04	HBR -B09	HBR -B02	HBR -B01
COLOR, ASTM			1.5	L1.0	L1.0	–	–	–
SPECIFIC GRAVITY			0.883	0.914	0.925	0.95	1.01	1.05
VISCOSITY	40℃	mm^2/s (cSt)	56.0	54.5	96.5	175	168	298
	100℃		7.0	6.07	8.12	16.5	20.2	32.0
FLASH POINT		℃	220	188	198	265	290	271
POUR POINT		℃	-40	-35	-25	-30	-43	-35
T.A.N		MgKOH/g	0.01	0.00	0.01	–	–	–
COPPER STRIP		100℃/3hr	1a	1a	1a	–	–	–
MOISTURE		ppm	15	20	20	–	–	–
FLOC POINT		℃	-75	-45	-35	–	–	–
DIELETRIC STRENGTH (2.5mm)		KV	75	50	50	46.6	–	–

Applicable oil types (R134a, R404A, R407C)

SPECIFICATION		UNITS	HBR -B05	HBR -B08	HBR -B09	HBR -B04
COLOR, ASTM			–	–	–	–
SPECIFIC GRAVITY			0.945	0.94	0.95	0.95
VISCOSITY	40℃	mm^2/s (cSt)	64	131	175	215.9
	100℃		8.9	14.53	16.5	20.8
FLASH POINT		℃	266	254	265	271
POUR POINT		℃	-43	-36.5	-30	-25
T.A.N		mg KOH/g	–	–	–	–
COPPER STRIP 100℃/3hr			–	–	–	–
MOISTURE		ppm	–	–	–	–
FLOC POINT		℃	–	–	–	–
DIELETRIC STRENGTH 2.5mm		KV	–	–	46.6	–

Note: For other applicable oil types (HFO Refrigerant), please consult HANBELL firstly for approval.

3.2 Pre-cautions of changing oil

1. Use only qualified oil and do not mix different brands of oil together. Selection of oil should match characteristics of the refrigerant used. Some types of synthetic oil are incompatible with mineral oil. Oil remained in the compressor should be totally cleaned up in the system before charging different brands of oil. Charge the compressor with oil for the first start and then change it into new oil again to ensure that there's no mix at all.

2. When using polyester oil for chiller systems, please make sure not to expose oil to the atmosphere for prevention of change in its property. Therefore, it is necessary to vacuum the system completely when installing the compressor.

3. In order to ensure no moisture inside the system, it is suggested to clean the system by charging it with dry Nitrogen and then vacuum it repeatedly as long as possible.

4. It is a must to change the oil in motor burned out case, because acid debris may still remain inside the system. Please follow the procedures mentioned above to change oil in the system. Check acidity of oil after 72 hours of operation and then change it again until acidity of oil becomes normal.

5. Please contact Hanbell local distributors/agents for selection of oil.

3.3 Oil change

1. Change oil periodically: Check lubrication oil every 10,000 hours of continuous running. For the first operation of the compressor, it is recommended to change the oil and clean the external oil filter after running 2,000 hours. Check the system whether clean or not and then change oil every 20,000 hours or after 3 years' continuous running while the system operates in good condition.

2. Avoid clogging in oil filter with debris or swarf which may cause failure in bearings. An optional oil pressure differential switch is recommended to be installed. The switch will trip when the oil pressure differential between the primary and secondary sides reaches the critical point and then the compressor will automatically shut down to prevent the bearings from damage due to oil loss.

4. Compressor handling and installation

4.1 Compressor lifting

Each HANBELL screw compressor has been carefully tested at the factory and every precautionary measures have been taken to make sure that compressors will keep in perfect condition when reach customers' work. After the compressor arrives at your warehouse, please check if its crate is kept in good condition and check all the compressor accessories with shipping documents to see if there is any discrepancy.

When lifting the compressor, it is recommended to use a steel chain or steel cable which can be used for loading capacity of 3000kgf as shown in the figure below. Make sure that chains, cables or other lifting equipments are properly positioned to protect the compressor and its accessories from damaging. Keep the compressor in horizontal position when lifting, and prevent it from crashing or falling on the ground, hitting the wall or any other accident that may damage it or its accessories.

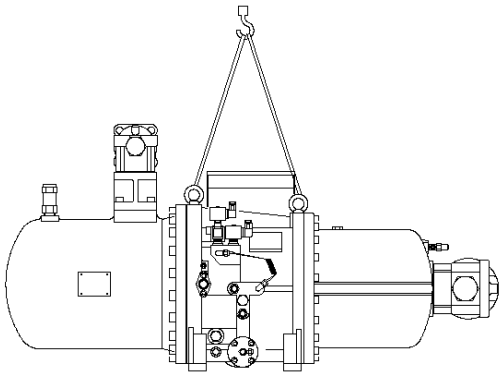

Figure 18 Lift the compressor with steel chain or steel cable

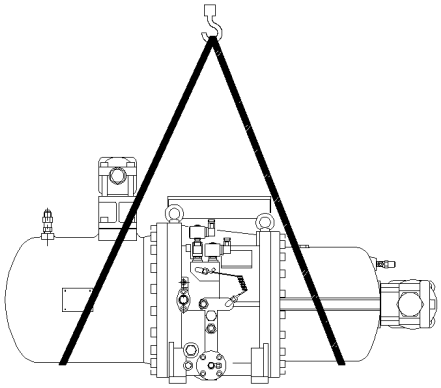

Figure 19 Lift the compressor with safety ropes

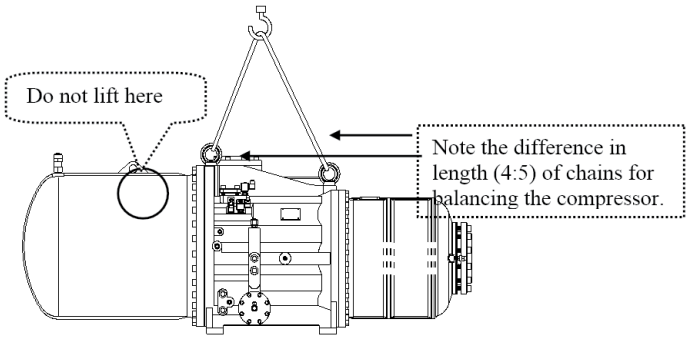

Figure 21 RC2-1270 and RC2-1530 lifting instruction

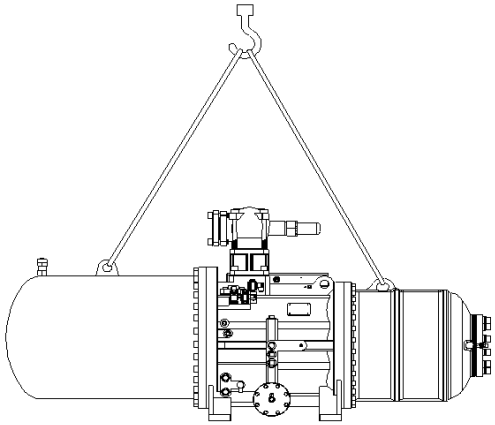

Figure 20 RC2-1020 and RC2-1130 lifting instruction

Note: For Model RC2-1270 and RC2-1530, please lift the compressor as instruction above. Apply the two eyebolts on the top of chamber to lift the compressor for installation. The opening on the top of oil separator is only for dismantling oil separator during maintenance or overhauling. Please do not lift the compressor by this opening.

4.2 Mounting the compressor

The installation of the compressor in the refrigeration system should be accessible and make sure that the chiller base or site is far enough from the heat source to prevent heat radiation. The compressor should also be installed as close as possible to the electrical power supply for easier connection and must keep good ventilation and low humidity condition in the site. Make sure that the frame or supporter is strong enough to prevent excessive vibration and noise while the compressor is running and must reserve enough space for compressors' future overhauling work.
The compressor must be installed horizontally and in order to prevent excessive vibration transferred by the structure and piping of the chiller while in operation, the cushion or anti-vibration pad should be installed. The installation of the anti-vibration pad is shown in Figure 22. The screws should only be tightened until slight deformation of the rubber pad is visible.
※It is strongly recommended to position the compressor higher than the evaporator

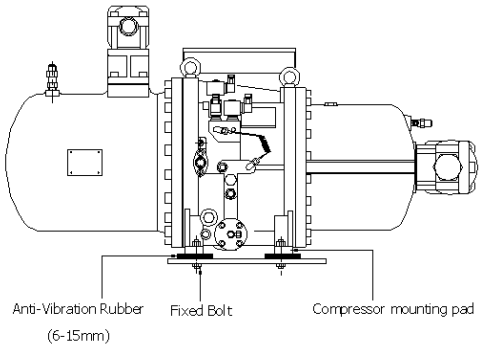

Figure 22 Installation of anti-vibration pad

Suggestions on piping works

The unsuitable piping works done to the compressor could cause abnormal vibration and noise that might damage the compressor. Take notice of the following pointers to prevent this situation from happening:
1. Cleanliness of the system should be kept after welding the piping to avoid any swarf or debris contained inside the system as it may cause serious damage to the compressor during operation.

2. In order to reduce the vibration on the piping tubes, it is recommended to use copper tube to be the suction and discharge piping tubes. Copper tubes are better to minimize the vibration in the piping while the compressor is in operation. In case steel tubes are used in piping system, the suitable welding works are very important to avoid any stress in the piping. This inner stress can cause harmonic vibration and noise that can reduce the life of the compressor. If a large-caliber copper tube is not easily accessible and a steel tube is used instead in suction port, Hanbell also recommends the use of a copper tube in discharge port to best minimize abnormal vibration and noise.

3. Remove the oxidized impurities, swarf or debris caused by welding in the piping tubes. If these materials fall into the compressor, the oil filter might be clogged and result in the malfunction of lubrication system, bearings and capacity control system.

4. The material of suction and discharge flange bushing is forged steel and it can be welded directly with piping connectors. After welding the flange bushing and pipes, it must be cooled down by ambient air. Do not use water to cool it down because water quenching is prohibited.

Installing the compressor in a sloping position

Figure 23 shows a 15° limit of oblique angle for installation of compressor. In case the oblique angle is higher than the limit, compressor will be shut down easily. For special applications like the installation in ships, fishing boats, etc…, where the oblique angle might exceed the limit, external oil separators, oil tanks and related accessories are recommended to be installed. Please contact HANBELL or local distributors for further layout recommendation.

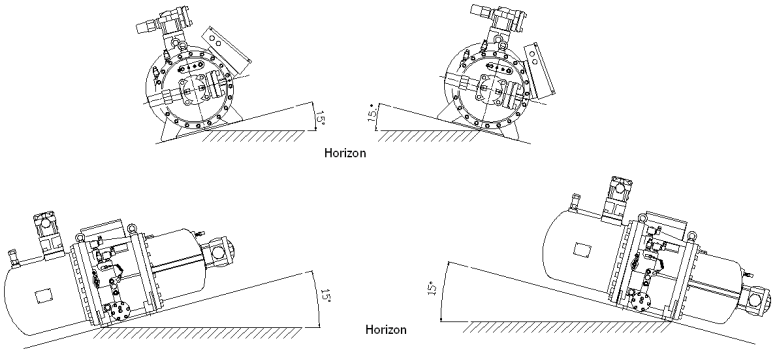

Figure 23 Limits of oblique angle for the installation of the compressor

4.3 RC2 compressor outline drawings

1. RC2-A outline drawings

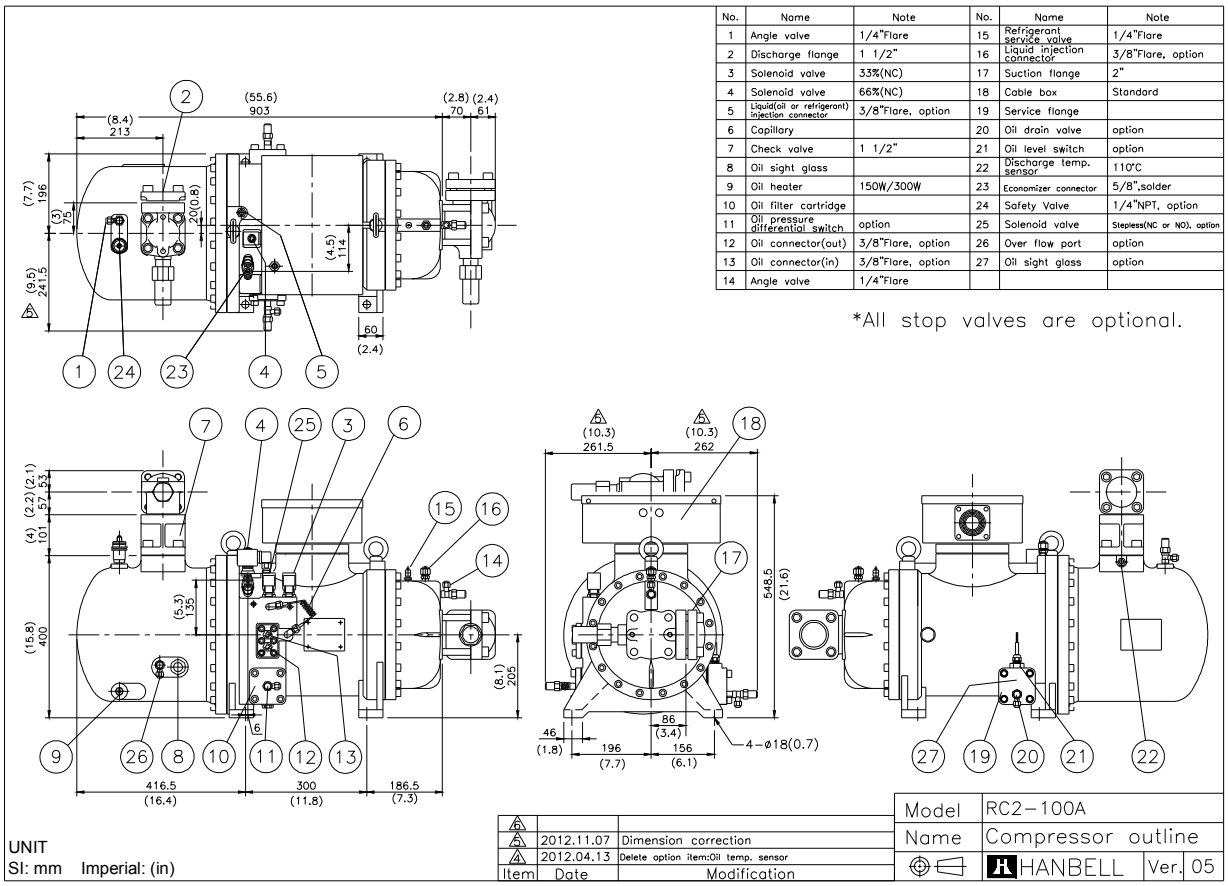

No.	Name	Note	No.	Name	Note
1	Angle valve	1/4"Flare	15	Refrigerant service valve	1/4"Flare
2	Discharge flange	1 1/2"	16	Liquid injection connector	3/8"Flare, option
3	Solenoid valve	33%(NC)	17	Suction flange	2"
4	Solenoid valve	66%(NC)	18	Cable box	Standard
5	Liquid(oil or refrigerant) injection connector	3/8"Flare, option	19	Service flange	
6	Capillary		20	Oil drain valve	option
7	Check valve	1 1/2"	21	Oil level switch	option
8	Oil sight glass		22	Discharge temp. sensor	110°C
9	Oil heater	150W/300W	23	Economizer connector	5/8",solder
10	Oil filter cartridge		24	Safety Valve	1/4"NPT, option
11	Oil pressure differential switch	option	25	Solenoid valve	Stepless(NC or NO), option
12	Oil connector(out)	3/8"Flare, option	26	Over flow port	option
13	Oil connector(in)	3/8"Flare, option	27	Oil sight glass	option
14	Angle valve	1/4"Flare			

*All stop valves are optional.

UNIT
SI: mm Imperial: (in)

Item	Date	Modification
6		
5	2012.11.07	Dimension correction
4	2012.04.13	Delete option item:Oil temp. sensor

Model	RC2-100A		
Name	Compressor outline		
	HANBELL	Ver.	05

No.	Name	Note	No.	Name	Note
1	Angle valve	1/4"Flare	15	Refrigerant service valve	1/4"Flare
2	Discharge flange	1 1/2"	16	Liquid injection connector	3/8"Flare, option
3	Solenoid valve	33%(NC)	17	Suction flange	2"
4	Solenoid valve	66%(NC)	18	Cable box	Standard
5	Liquid(oil or refrigerant) injection connector	3/8"Flare, option	19	Service flange	
6	Capillary		20	Oil drain valve	option
7	Check valve	1 1/2"	21	Oil level switch	option
8	Oil sight glass		22	Discharge temp. sensor	110°C
9	Oil heater	150W/300W	23	Economizer connector	5/8",solder
10	Oil filter cartridge		24	Safety Valve	1/4"NPT, option
11	Oil pressure differential switch	option	25	Solenoid valve	Stepless(NC or NO), option
12	Oil connector(out)	3/8"Flare, option	26	Over flow port	option
13	Oil connector(in)	3/8"Flare, option	27	Oil sight glass	option
14	Angle valve	1/4"Flare			

*All stop valves are optional.

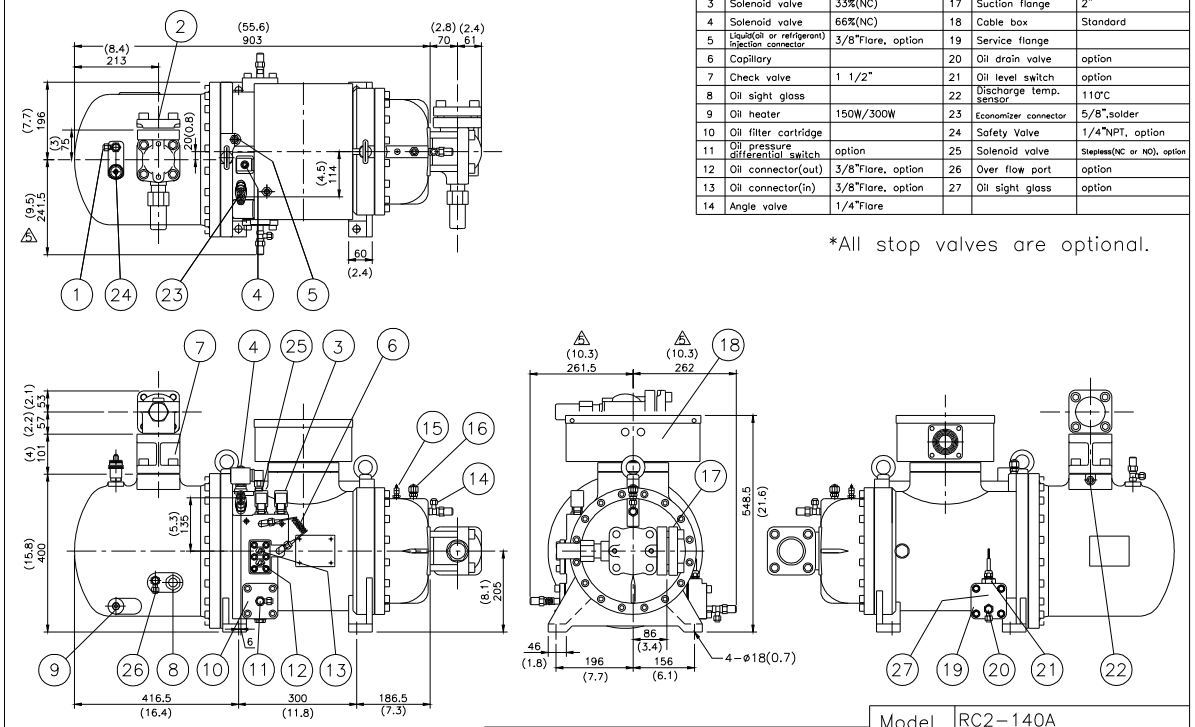

UNIT
SI: mm Imperial: (in)

Item	Date	Modification
6		
5	2012.11.07	Dimension correction
4	2012.04.13	Delete option item:Oil temp. sensor

Model	RC2-140A
Name	Compressor outline
HANBELL	Ver. 05

No.	Name	Note	No.	Name	Note
1	Angle valve	1/4"Flare	15	Refrigerant service valve	1/4"Flare
2	Discharge flange	1 1/2"	16	Liquid injection connector	3/8"Flare, option
3	Solenoid valve	33%(NC)	17	Suction flange	2 1/2"
4	Solenoid valve	66%(NC)	18	Cable box	Standard
5	Liquid(oil or refrigerant) injection connector	3/8"Flare, option	19	Service flange	
6	Capillary		20	Oil drain valve	option
7	Check valve	1 1/2"	21	Oil level switch	option
8	Oil sight glass		22	Discharge temp. sensor	110°C
9	Oil heater	150W/300W	23	Economizer connector	5/8",solder
10	Oil filter cartridge		24	Safety Valve	1/2"NPT, option
11	Oil pressure differential switch	option	25	Solenoid valve	Stepless(NC or NO), option
12	Oil connector(out)	3/8"Flare, option	26	Over flow port	option
13	Oil connector(in)	3/8"Flare, option	27	Oil sight glass	option
14	Angle valve	1/4"Flare			

*All stop valves are optional.

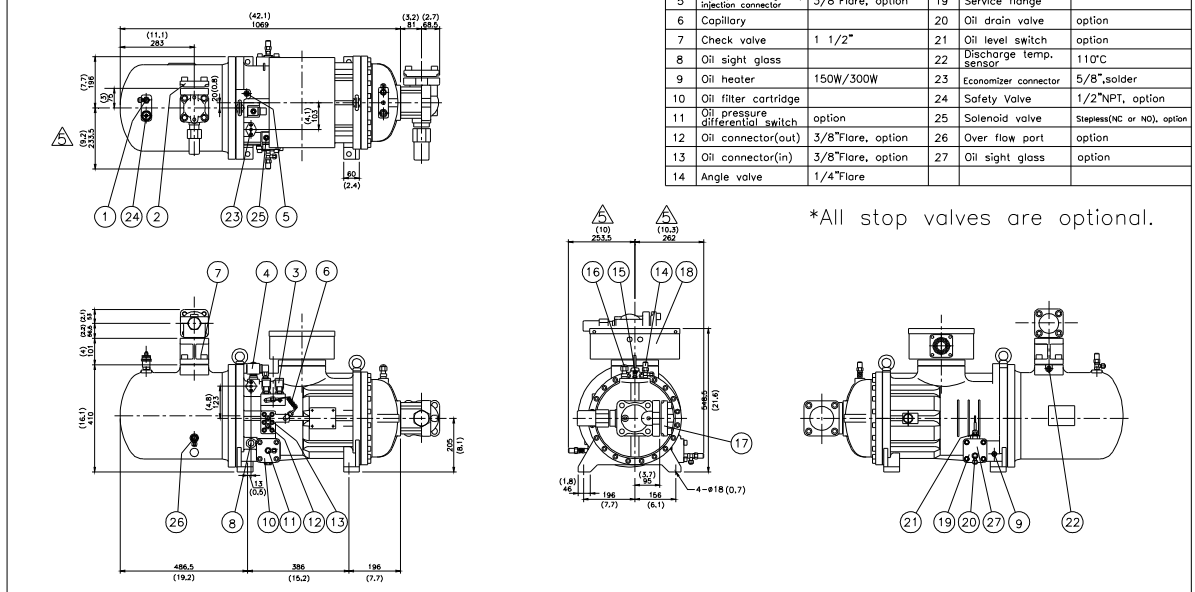

UNIT
SI: mm Imperial: (in)

Item	Date	Modification
6		
5	2012.11.06	Dimension correction
4	2012.04.13	Delete 1.Connector 2.Oil temp. sensor

Model	RC2-180A
Name	Compressor outline
HANBELL	Ver. 05

No.	Name	Note	No.	Name	Note
1	Angle valve	1/4"Flare	16	Angle valve	1/4"Flare
2	Discharge flange	1 1/2"	17	Refrigerant service valve	1/4"Flare
3	Solenoid valve	50%(NC)	18	Solenoid valve	Stepless(NC or NO),option
4	Solenoid valve	75%(NC)	19	Liquid injection connector	5/8"Flare, option
5	Solenoid valve	25%(NC)	20	Suction flange	2 1/2"
6	Liquid(oil or refrigerant) injection connector	3/8"Flare, option	21	Cable box	Standard
7	Capillary		22	Service flange	
8	Check valve	1 1/2"	23	Oil drain valve	option
9	Oil sight glass	Low side	24	Oil level switch	option
10	Oil heater	150W/300W	25	Discharge temp. sensor	110°C
11	Oil filter cartridge		26	Safety Valve	1/2" NPT,option
12	Oil pressure differential switch	Connector, option	27	Economizer port	5/8", solder
13	Oil connector(out)	5/8"Flare, option	28	Oil sight glass	High side
14	Stop pin	option	29	Over flow port	option
15	Oil connector(in)	5/8"Flare, option			

*All stop valves are optional

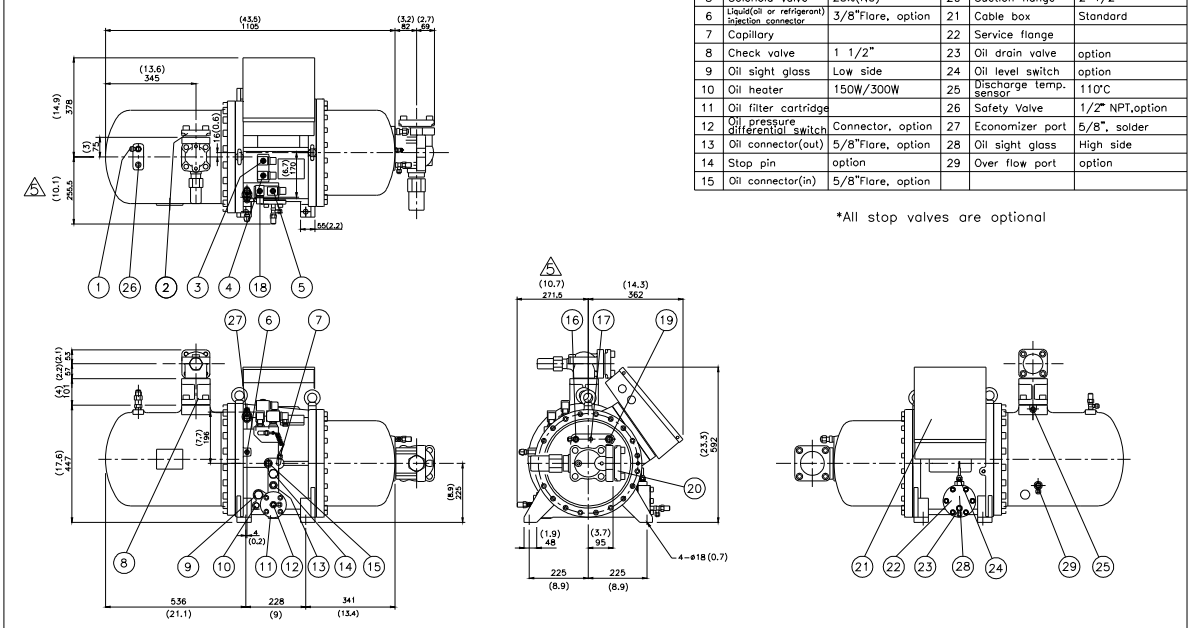

Item	Date	Modification
6		
5	2012.11.06	Dimension correction
4	2012.04.13	Delete 1.Connector 2.Oil temp. sensor

Model	RC2-200A
Name	Compressor outline
HANBELL	Ver. 05

UNIT
SI: mm Imperial: (in)

No.	Name	Note	No.	Name	Note
1	Angle valve	1/4"Flare	16	Angle valve	1/4"Flare
2	Discharge flange	2"	17	Refrigerant service valve	1/4"Flare
3	Solenoid valve	50%(NC)	18	Solenoid valve	
4	Solenoid valve	75%(NC)	19	Liquid injection connector	Stepless(NC or NO), option
5	Solenoid valve	35%(NC)	20	Suction flange	5/8"Flare, option
6	Liquid(oil or refrigerant) injection connector	3/8"Flare, option	21	Cable box	Standard
7	Capillary		22	Service flange	
8	Check valve	2"	23	Oil drain valve	option
9	Oil sight glass	Low side	24	Oil level switch	option
10	Oil heater	150W/300W	25	Discharge temp. sensor	110°C
11	Oil filter cartridge		26	Safety Valve	1/2"NPT,option
12	Oil pressure differential switch	Connector, option	27	Economizer port	5/8", solder
13	Oil connector(out)	5/8"Flare, option	28	Oil sight glass	High side
14	Stop pin	option	29	Over flow port	option
15	Oil connector(in)	5/8"Flare, option			

*All stop valves are optional

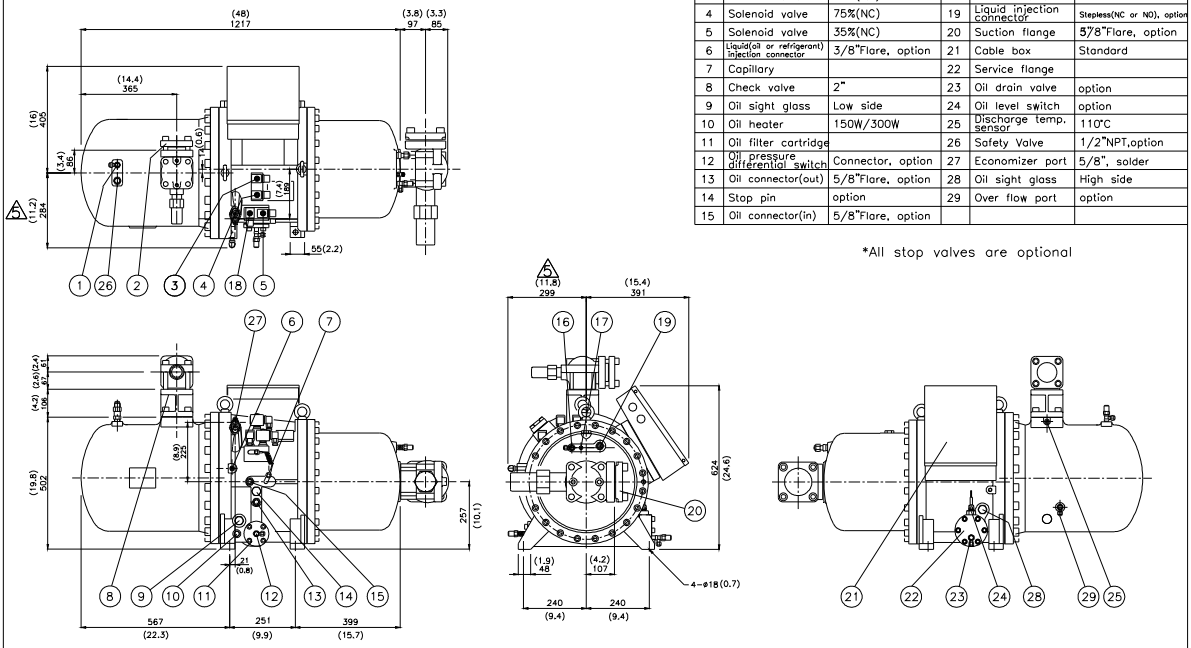

Item	Date	Modification
6		
5	2012.11.06	Dimension correction
4	2012.04.13	Delete 1.Connector 2.Oil temp. sensor

Model	RC2-230A
Name	Compressor outline
HANBELL	Ver. 05

UNIT
SI: mm Imperial: (in)

No.	Name	Note	No.	Name	Note
1	Angle valve	1/4"Flare	16	Angle valve	1/4"Flare
2	Discharge flange	2"	17	Refrigerant service valve	1/4"Flare
3	Solenoid valve	50%(NC)	18	Solenoid valve	Stepless(NC or NO), option
4	Solenoid valve	75%(NC)	19	Liquid injection connector	5/8"Flare, option
5	Solenoid valve	35%(NC)	20	Suction flange	3"
6	Liquid(oil or refrigerant) injection connector	3/8"Flare, option	21	Cable box	Standard
7	Capillary		22	Service flange	
8	Check valve	2"	23	Oil drain valve	option
9	Oil sight glass	Low side	24	Oil level switch	option
10	Oil heater	150W/300W	25	Discharge temp. sensor	110°C
11	Oil filter cartridge		26	Safety Valve	1/2"NPT,option
12	Oil pressure differential switch	Connector, option	27	Economizer port	5/8", solder
13	Oil connector(out)	5/8"Flare, option	28	Oil sight glass	High side
14	Stop pin	option	29	Over flow port	option
15	Oil connector(in)	5/8"Flare, option			

*All stop valves are optional

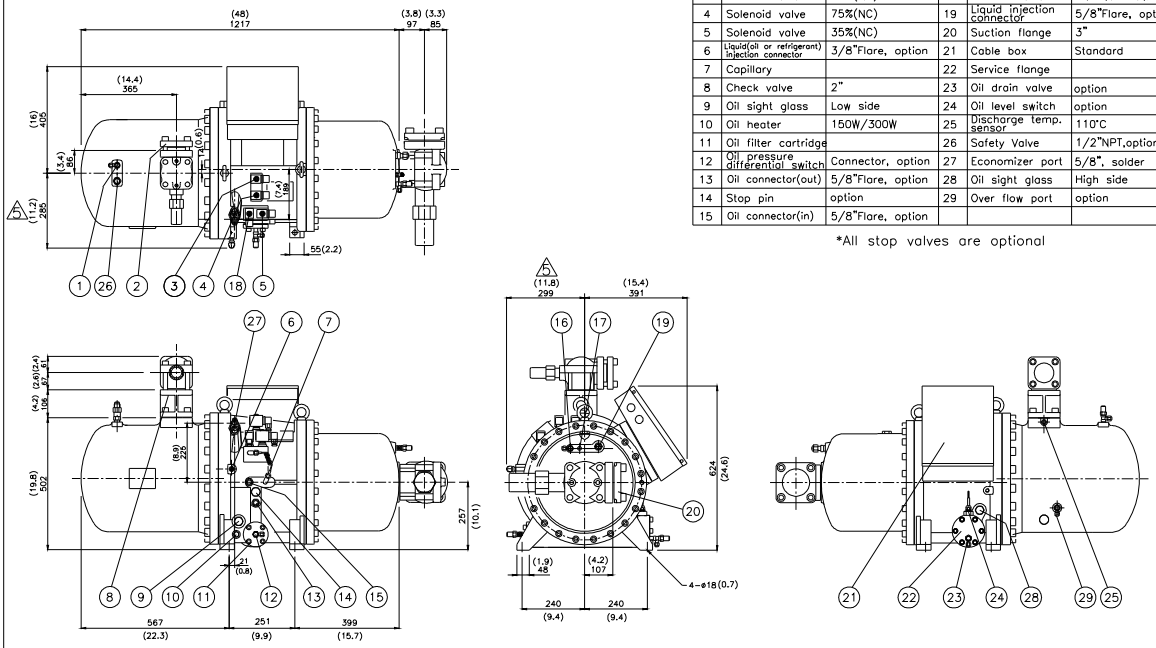

UNIT
SI: mm Imperial: (in)

Item	Date	Modification
3		
2	2012.11.06	Dimension correction
4	2012.04.13	Delete 1.Connector 2.Oil temp. sensor

Model	RC2-260A
Name	Compressor outline
HANBELL	Ver. 05

No.	Name	Note	No.	Name	Note
1	Angle valve	1/4"Flare	16	Angle valve	1/4"Flare
2	Discharge flange	2"	17	Refrigerant service valve	1/4"Flare
3	Solenoid valve	50%(NC)	18	Solenoid valve	Stepless(NC or NO), option
4	Solenoid valve	75%(NC)	19	Liquid injection connector	5/8"Flare, option
5	Solenoid valve	35%(NC)	20	Suction flange	3"
6	Liquid(oil or refrigerant) injection connector	3/8"Flare, option	21	Cable box	Standard
7	Capillary		22	Service flange	
8	Check valve	2"	23	Oil drain valve	option
9	Oil sight glass	Low side	24	Oil level switch	option
10	Oil heater	150W/300W	25	Discharge temp. sensor	110°C
11	Oil filter cartridge		26	Safety Valve	1"NPT,option
12	Oil pressure differential switch	Connector, option	27	Economizer port	7/8", solder
13	Oil connector(out)	5/8"Flare, option	28	Oil sight glass	High side
14	Stop pin	option	29	Over flow port	option
15	Oil connector(in)	5/8"Flare, option			

*All stop valves are optional

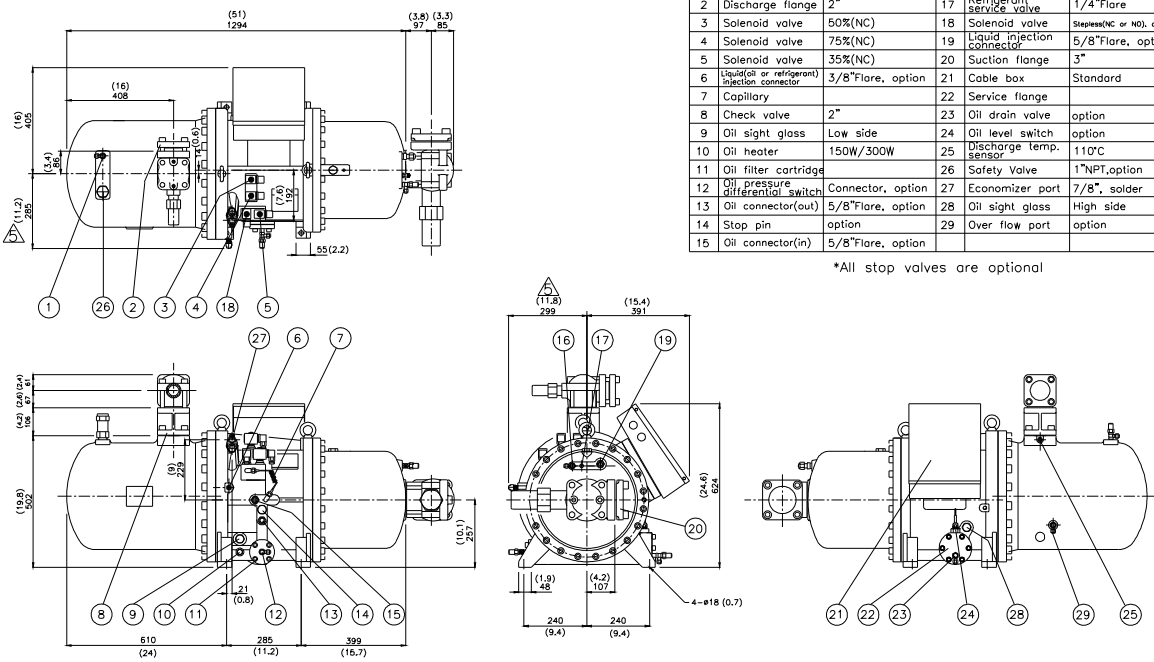

UNIT
SI: mm Imperial: (in)

Item	Date	Modification
6		
5	2012.11.06	Dimension correction
4	2012.04.16	Delete 1.Connector 2.Oil temp. sensor

Model	RC2-300A
Name	Compressor outline
HANBELL	Ver. 05

No.	Name	Note	No.	Name	Note
1	Angle valve	1/4"Flare	16	Angle valve	1/4"Flare
2	Discharge flange	2"	17	Refrigerant service valve	1/4"Flare
3	Solenoid valve	50%(NC)	18	Solenoid valve	Stepless(NC or NO), option
4	Solenoid valve	75%(NC)	19	Liquid injection connector	5/8"Flare, option
5	Solenoid valve	35%(NC)	20	Suction flange	3"
6	Liquid(oil or refrigerant) injection connector	3/8"Flare, option	21	Cable box	Standard
7	Capillary		22	Service flange	
8	Check valve	2"	23	Oil drain valve	option
9	Oil sight glass	Low side	24	Oil level switch	option
10	Oil heater	150W/300W	25	Discharge temp. sensor	110°C
11	Oil filter cartridge		26	Safety Valve	1/2"NPT,option
12	Oil pressure differential switch	Connector, option	27	Economizer port	7/8", solder
13	Oil connector(out)	5/8"Flare, option	28	Oil sight glass	High side
14	Stop pin	option	29	Over flow port	option
15	Oil connector(in)	5/8"Flare, option			

*All stop valves are optional

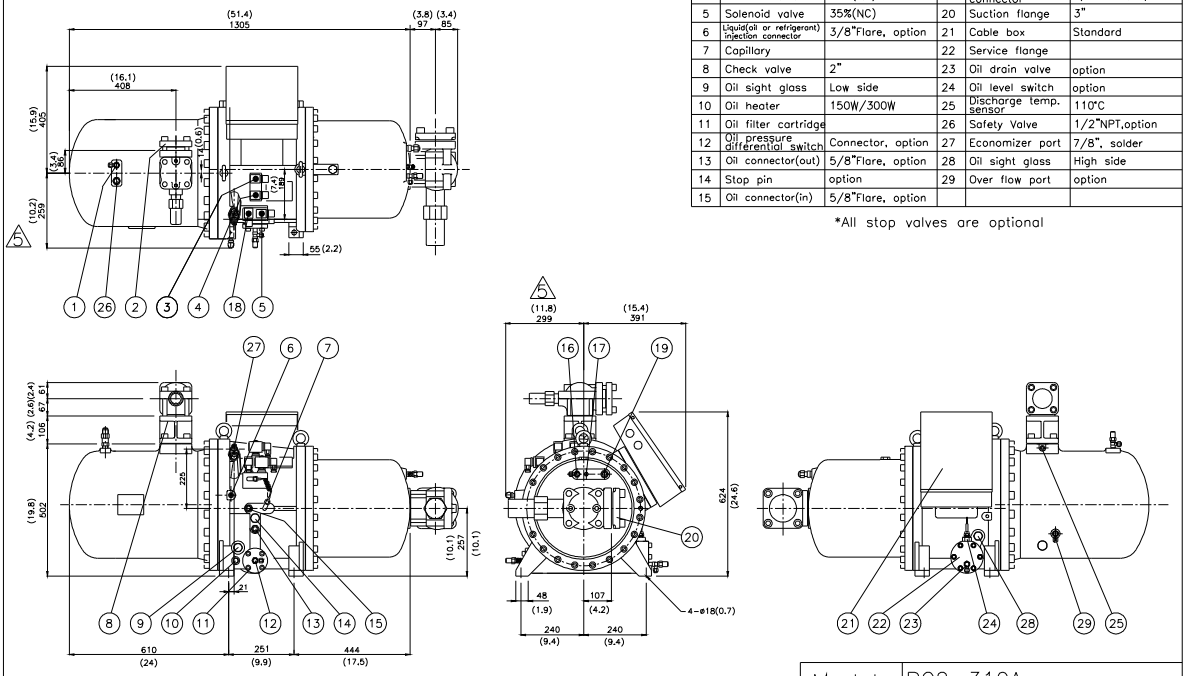

UNIT
SI: mm Imperial: (in)

Item	Date	Modification
6		
5	2012.11.06	Dimension correction
4	2012.04.16	Delete 1.Connector 2.Oil temp. sensor

Model	RC2-310A		
Name	Compressor outline		
	HANBELL	Ver.	05

No.	Name	Note	No.	Name	Note
1	Angle valve	1/4"Flare	16	Angle valve	1/4"Flare
2	Discharge flange	2"	17	Refrigerant service valve	1/4"Flare
3	Solenoid valve	50%(NC)	18	Solenoid valve	Stepless(NC or NO), option
4	Solenoid valve	75%(NC)	19	Liquid injection connector	5/8"Flare, option
5	Solenoid valve	35%(NC)	20	Suction flange	3"
6	Liquid(oil or refrigerant) injection connector	3/8"Flare, option	21	Cable box	Standard
7	Capillary		22	Service flange	
8	Check valve	2"	23	Oil drain valve	option
9	Oil sight glass	Low side	24	Oil level switch	option
10	Oil heater	150W/300W	25	Discharge temp. sensor	110°C
11	Oil filter cartridge		26	Safety Valve	1"NPT,option
12	Oil pressure differential switch	Connector, option	27	Economizer port	7/8", solder
13	Oil connector(out)	5/8"Flare, option	28	Oil sight glass	High side
14	Stop pin	option	29	Over flow port	option
15	Oil connector(in)	5/8"Flare, option			

*All stop valves are optional

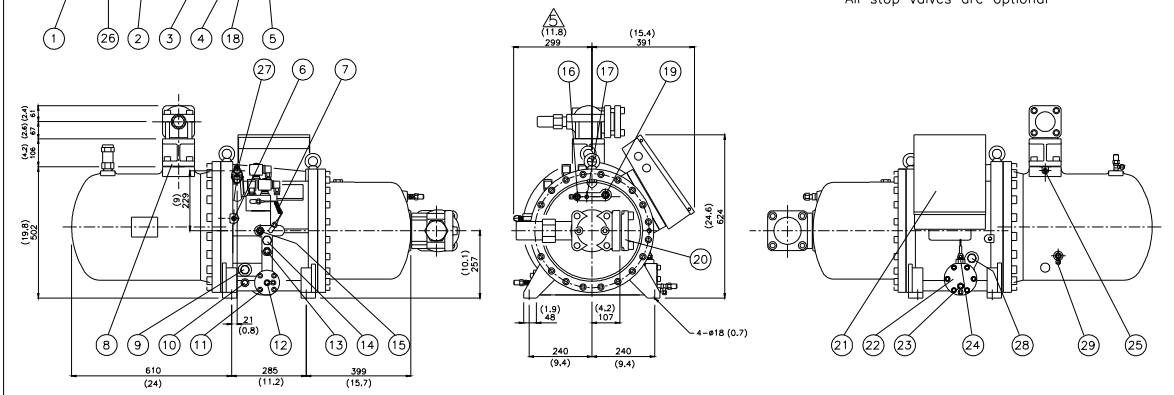

UNIT
SI: mm Imperial: (in)

Item	Date	Modification
6		
5	2012.11.06	Dimension correction
4	2012.04.16	Delete 1.Connector 2.Oil temp. sensor

Model	RC2-320A		
Name	Compressor outline		
	HANBELL	Ver.	05

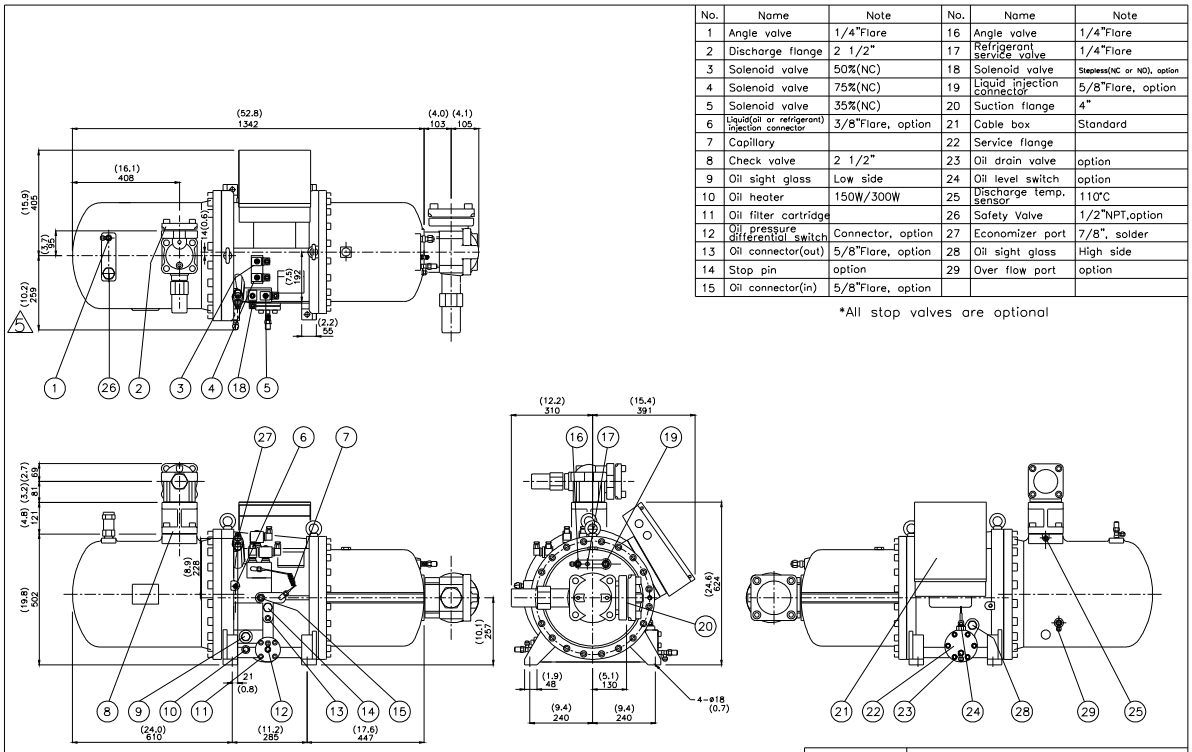

No.	Name	Note	No.	Name	Note
1	Angle valve	1/4"Flare	16	Angle valve	1/4"Flare
2	Discharge flange	2 1/2"	17	Refrigerant service valve	1/4"Flare
3	Solenoid valve	50%(NC)	18	Solenoid valve	Stepless(NC or NO), option
4	Solenoid valve	75%(NC)	19	Liquid injection connector	5/8"Flare, option
5	Solenoid valve	35%(NC)	20	Suction flange	4"
6	Liquid(oil or refrigerant) injection connector	3/8"Flare, option	21	Cable box	Standard
7	Capillary		22	Service flange	
8	Check valve	2 1/2"	23	Oil drain valve	option
9	Oil sight glass	Low side	24	Oil level switch	option
10	Oil heater	150W/300W	25	Discharge temp. sensor	110°C
11	Oil filter cartridge		26	Safety Valve	1/2"NPT,option
12	Oil pressure differential switch	Connector, option	27	Economizer port	7/8", solder
13	Oil connector(out)	5/8"Flare, option	28	Oil sight glass	High side
14	Stop pin	option	29	Over flow port	option
15	Oil connector(in)	5/8"Flare, option			

*All stop valves are optional

UNIT
SI: mm Imperial: (in)

Item	Date	Modification
6		
5	2012.11.06	Dimension correction
4	2012.04.16	Delete 1.Connector 2.Oil temp. sensor

Model	RC2-340A
Name	Compressor outline
HANBELL	Ver. 05

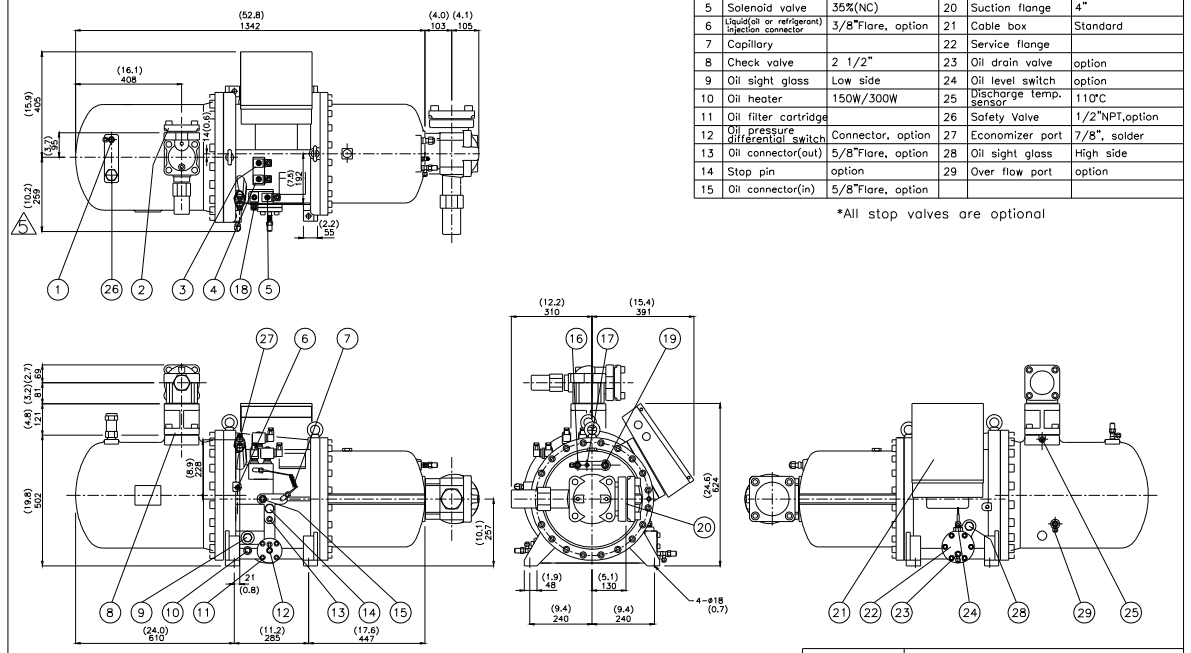

No.	Name	Note	No.	Name	Note
1	Angle valve	1/4"Flare	16	Angle valve	1/4"Flare
2	Discharge flange	2 1/2"	17	Refrigerant service valve	1/4"Flare
3	Solenoid valve	50%(NC)	18	Solenoid valve	Stepless(NC or NO), option
4	Solenoid valve	75%(NC)	19	Liquid injection connector	5/8"Flare, option
5	Solenoid valve	35%(NC)	20	Suction flange	4"
6	Liquid(oil or refrigerant) injection connector	3/8"Flare, option	21	Cable box	Standard
7	Capillary		22	Service flange	
8	Check valve	2 1/2"	23	Oil drain valve	option
9	Oil sight glass	Low side	24	Oil level switch	option
10	Oil heater	150W/300W	25	Discharge temp. sensor	110°C
11	Oil filter cartridge		26	Safety Valve	1/2"NPT,option
12	Oil pressure differential switch	Connector, option	27	Economizer port	7/8", solder
13	Oil connector(out)	5/8"Flare, option	28	Oil sight glass	High side
14	Stop pin	option	29	Over flow port	option
15	Oil connector(in)	5/8"Flare, option			

*All stop valves are optional

UNIT
SI: mm Imperial: (in)

Item	Date	Modification
6		
5	2012.11.06	Dimension correction
4	2012.04.16	Delete 1.Connector 2.Oil temp. sensor

Model	RC2-370A
Name	Compressor outline
HANBELL	Ver. 05

No.	Name	Note	No.	Name	Note
1	Angle valve	1/4"Flare	16	Angle valve	1/4"Flare
2	Discharge flange	2 1/2"	17	Refrigerant service valve	1/4"Flare
3	Solenoid valve	50%(NC)	18	Solenoid valve	Stepless(NC or NO), option
4	Solenoid valve	75%(NC)	19	Liquid injection connector	5/8"Flare, option
5	Solenoid valve	35%(NC)	20	Suction flange	4"
6	Liquid(oil or refrigerant) injection connector	3/8"Flare, option	21	Cable box	Standard
7	Capillary		22	Service flange	
8	Check valve	2 1/2"	23	Oil drain valve	option
9	Oil sight glass	Low side	24	Oil level switch	option
10	Oil heater	150W/300W	25	Discharge temp. sensor	110°C
11	Oil filter cartridge		26	Safety Valve	1"NPT,option
12	Oil pressure differential switch	Connector, option	27	Economizer port	7/8", solder
13	Oil connector(out)	5/8"Flare, option	28	Oil sight glass	High side
14	Stop pin	option	29	Over flow port	option
15	Oil connector(in)	5/8"Flare, option			

*All stop valves are optional

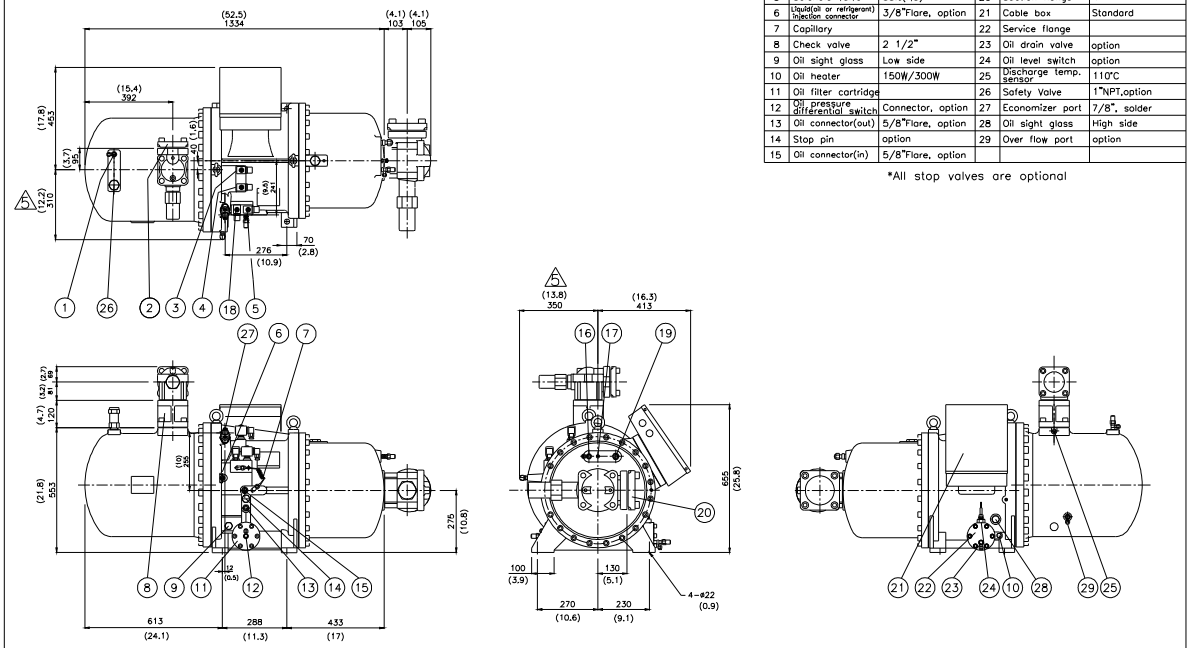

UNIT
SI: mm Imperial: (in)

Item	Date	Modification
6		
5	2012.11.06	Dimension correction
4	2012.04.16	Delete 1.Connector 2.Oil temp. sensor

Model	RC2-410A		
Name	Compressor outline		
	HANBELL	Ver.	05

No.	Name	Note	No.	Name	Note
1	Angle valve	1/4"Flare	16	Angle valve	1/4"Flare
2	Discharge flange	2 1/2"	17	Refrigerant service valve	1/4"Flare
3	Solenoid valve	50%(NC)	18	Solenoid valve	Stepless(NC or NO), option
4	Solenoid valve	75%(NC)	19	Liquid injection connector	5/8"Flare, option
5	Solenoid valve	35%(NC)	20	Suction flange	4"
6	Liquid(oil or refrigerant) injection connector	3/8"Flare, option	21	Cable box	Standard
7	Capillary		22	Service flange	
8	Check valve	2 1/2"	23	Oil drain valve	option
9	Oil sight glass	Low side	24	Oil level switch	option
10	Oil heater	150W/300W	25	Discharge temp. sensor	110°C
11	Oil filter cartridge		26	Safety Valve	1"NPT,option
12	Oil pressure differential switch	Connector, option	27	Economizer port	7/8", solder
13	Oil connector(out)	5/8"Flare, option	28	Oil sight glass	High side
14	Stop pin	option	29	Over flow port	option
15	Oil connector(in)	5/8"Flare, option			

*All stop valves are optional

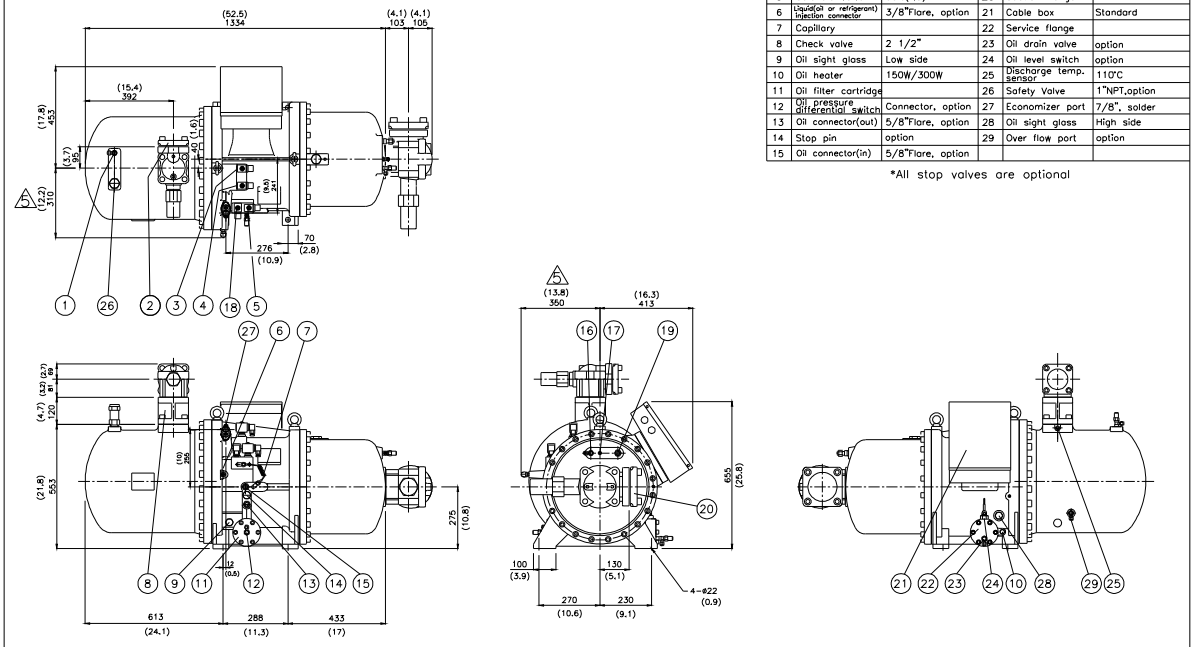

UNIT
SI: mm Imperial: (in)

Item	Date	Modification
6		
5	2012.11.06	Dimension correction
4	2012.04.16	Delete 1.Connector 2.Oil temp. sensor

Model	RC2-430A		
Name	Compressor outline		
	HANBELL	Ver.	05

No.	Name	Note	No.	Name	Note
1	Angle valve	1/4"Flare	16	Angle valve	1/4"Flare
2	Discharge flange	2 1/2"	17	Refrigerant service valve	1/4"Flare
3	Solenoid valve	50%(NC)	18	Solenoid valve	Stepless(NC or NO), option
4	Solenoid valve	75%(NC)	19	Liquid injection connector	5/8"Flare, option
5	Solenoid valve	35%(NC)	20	Suction flange	4"
6	Liquid(oil or refrigerant) injection connector	3/8"Flare, option	21	Cable box	Standard
7	Capillary		22	Service flange	
8	Check valve	2 1/2"	23	Oil drain valve	option
9	Oil sight glass	Low side	24	Oil level switch	option
10	Oil heater	150W/300W	25	Discharge temp. sensor	110°C
11	Oil filter cartridge		26	Safety Valve	1"NPT,option
12	Oil pressure differential switch	Connector, option	27	Economizer port	7/8", solder
13	Oil connector(out)	5/8"Flare, option	28	Oil sight glass	High side
14	Stop pin	option	29	Over flow port	option
15	Oil connector(in)	5/8"Flare, option			

*All stop valves are optional

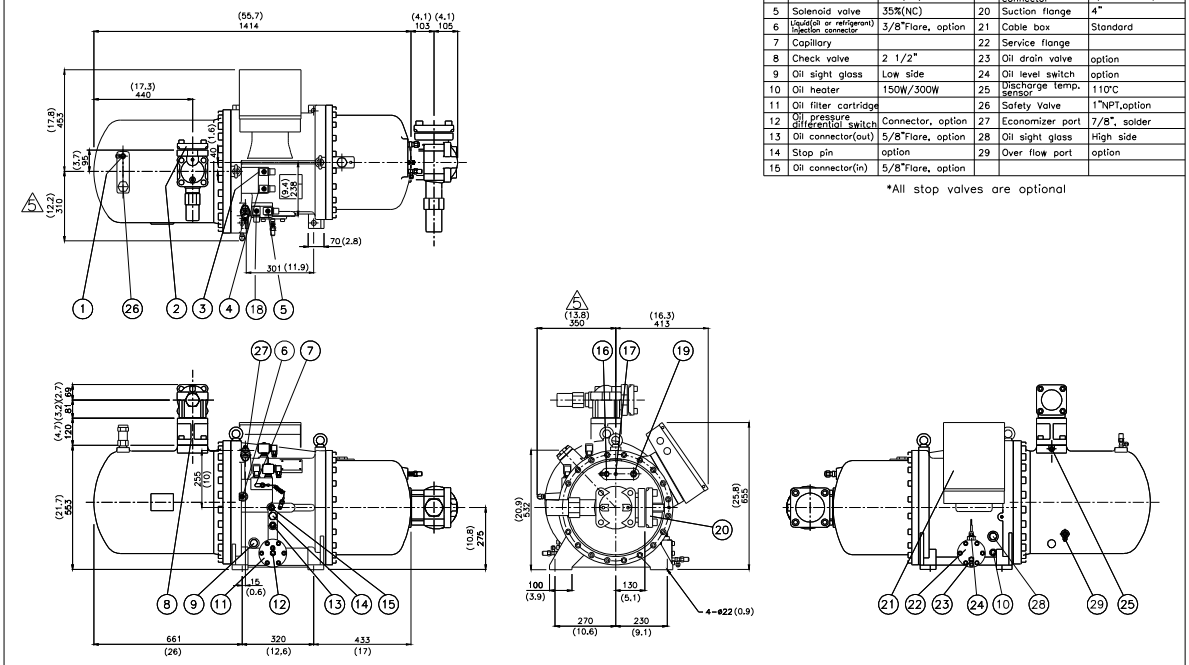

UNIT
SI: mm Imperial: (in)

Item	Date	Modification
6		
5	2012.11.06	Dimension correction
4	2012.04.16	Delete 1.Connector 2.Oil temp. sensor

Model	RC2-470A
Name	Compressor outline
HANBELL	Ver. 05

No.	Name	Note	No.	Name	Note
1	Angle valve	1/4"Flare	16	Angle valve	1/4"Flare
2	Discharge flange	3"	17	Refrigerant service valve	1/4"Flare
3	Solenoid valve	50%(NC)	18	Solenoid valve	Stepless(NC or NO), option
4	Solenoid valve	75%(NC)	19	Liquid injection connector	5/8"Flare, option
5	Solenoid valve	35%(NC)	20	Suction flange	4"
6	Liquid(oil or refrigerant) injection connector	3/8"Flare, option	21	Cable box	Standard
7	Capillary		22	Service flange	
8	Check valve	3"	23	Oil drain valve	option
9	Oil sight glass	Low side	24	Oil level switch	option
10	Oil heater	150W/300W	25	Discharge temp. sensor	110°C
11	Oil filter cartridge		26	Safety Valve	1"NPT,option
12	Oil pressure differential switch	Connector, option	27	Economizer port	7/8", solder
13	Oil connector(out)	5/8"Flare, option	28	Oil sight glass	High side
14	Stop pin	option	29	Over flow port	option
15	Oil connector(in)	5/8"Flare, option			

*All stop valves are optional

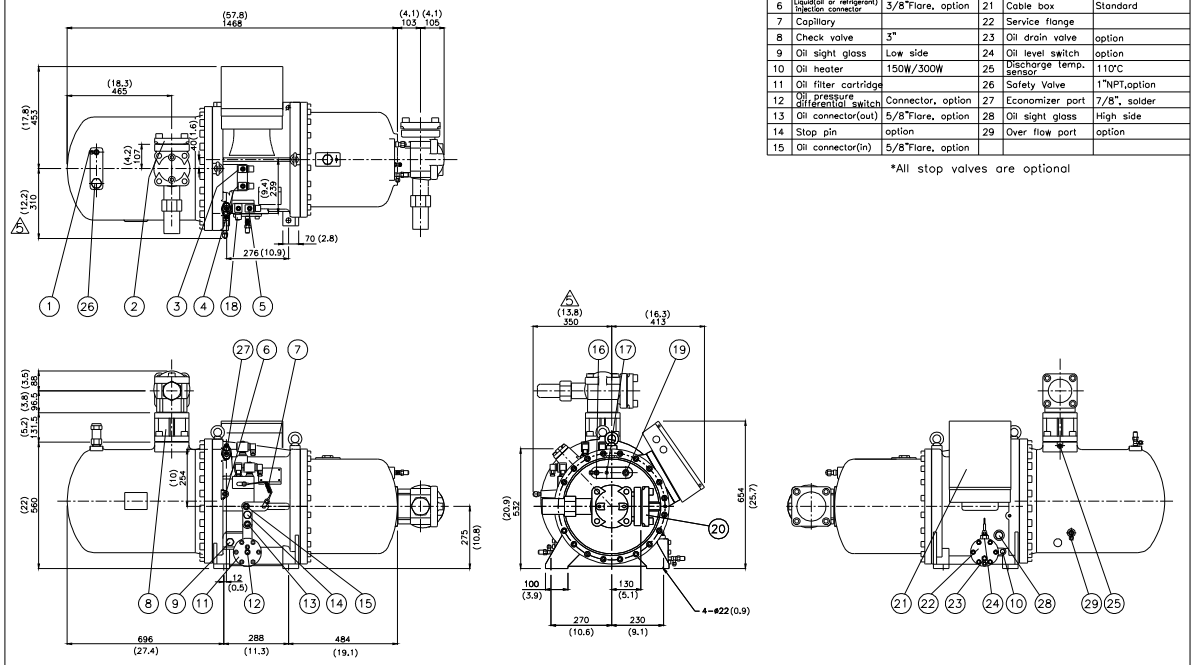

UNIT
SI: mm Imperial: (in)

Item	Date	Modification
6		
5	2012.11.06	Dimension correction
4	2012.04.16	Delete 1.Oil sight glass 2.Connector 3.Oil temp. sensor

Model	RC2-510A
Name	Compressor outline
HANBELL	Ver. 05

No.	Name	Note	No.	Name	Note
1	Angle valve	1/4"Flare	16	Oil connector(in)	5/8"Flare, option
2	Discharge flange	3"	17	Angle valve	1/4"Flare
3	Solenoid valve	50%(NC)	18	Refrigerant service valve	1/4"Flare
4	Solenoid valve	75%(NC)	19	Solenoid valve	Stepless(NC or NO), option
5	Solenoid valve	25%(NC)	20	Liquid injection connector	5/8"Flare, option
6	Liquid(oil or refrigerant) injection connector	3/8"Flare, option	21	Suction flange	4"
7	Capillary		22	Cable box	Standard
8	Check valve	3"	23	Service flange	
9	Oil flow sight glass		24	Oil drain valve	option
10	Oil level sight glass		25	Oil level switch	option
11	Oil heater	150W/300W	26	Discharge temp. sensor	110°C
12	Oil filter cartridge		27	Safety Valve	option
13	Oil pressure differential switch	option	28	Economizer connector	1 1/8",solder
14	Oil connector(out)	5/8"Flare, option	29	Over flow port	option
15	Stop pin	option			

*All stop valves are optional.

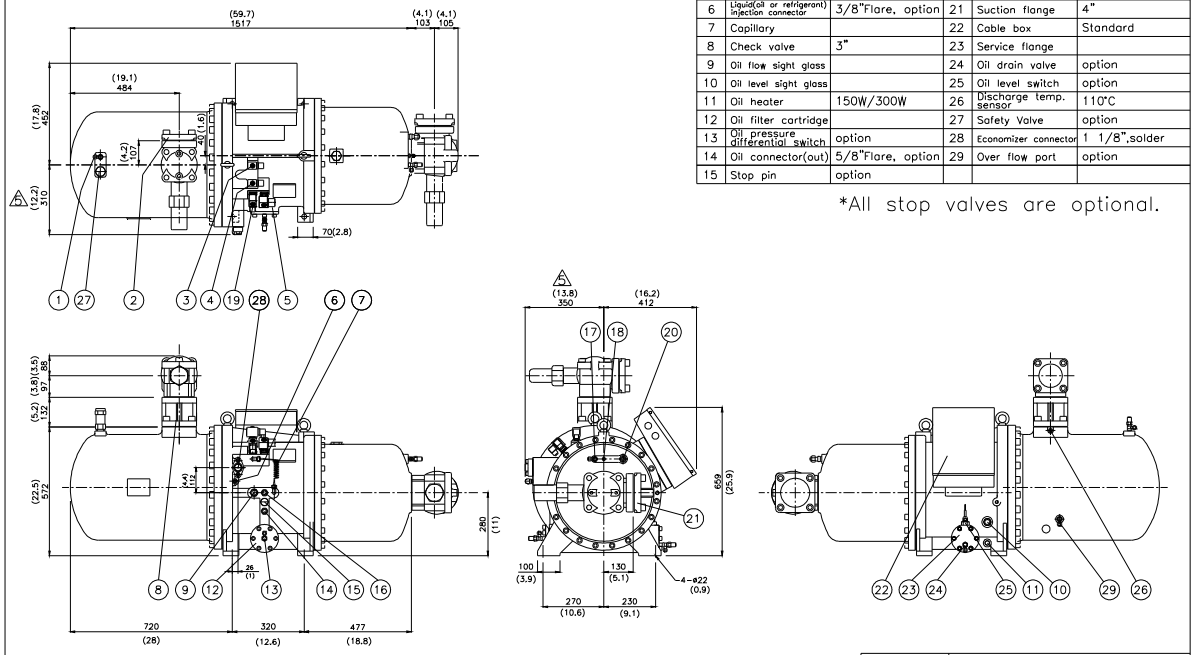

UNIT
SI: mm Imperial: (in)

Item	Date	Modification
6		
5	2012.11.06	Dimension correction
4	2012.04.16	Delete 1.Connector 2.Oil temp. sensor

Model	RC2-550A
Name	Compressor outline
HANBELL	Ver. 05

No.	Name	Note	No.	Name	Note
1	Angle valve	1/4"Flare	16	Angle valve	1/4"Flare
2	Discharge flange	3"	17	Refrigerant service valve	1/4"Flare
3	Solenoid valve	50%(NC)	18	Solenoid valve	Stepless(NC or NO), option
4	Solenoid valve	75%(NC)	19	Liquid injection connector	5/8"Flare, option
5	Solenoid valve	35%(NC)	20	Suction flange	4"
6	Liquid(oil or refrigerant) injection connector	3/8"Flare, option	21	Cable box	Standard
7	Capillary		22	Service flange	
8	Check valve	3"	23	Oil drain valve	option
9	Oil sight glass	Low side	24	Oil level switch	option
10	Oil heater	150W/300W	25	Discharge temp. sensor	110°C
11	Oil filter cartridge		26	Safety Valve	1"NPT,option
12	Oil pressure differential switch	Connector, option	27	Economizer port	1 1/8", solder
13	Oil connector(out)	5/8"Flare, option	28	Oil sight glass	High side
14	Stop pin	option	29	Over flow port	option
15	Oil connector(in)	5/8"Flare, option			

*All stop valves are optional

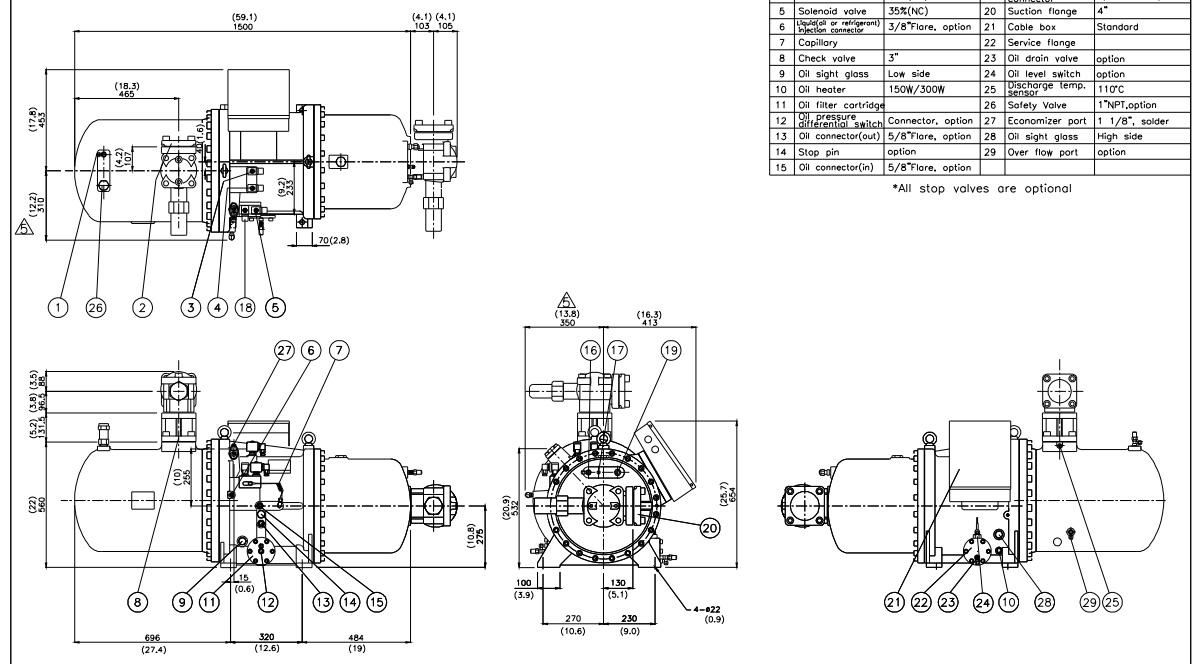

UNIT
SI: mm Imperial: (in)

Item	Date	Modification
6		
5	2012.11.06	Dimension correction
4	2012.04.16	Delete 1.Connector 2.Oil temp. sensor

Model	RC2-580A
Name	Compressor outline
HANBELL	Ver. 05

No.	Name	Note	No.	Name	Note
1	Angle valve	1/4"Flare	16	Oil connector(in)	5/8"Flare, option
2	Discharge flange	3"	17	Angle valve	1/4"Flare
3	Solenoid valve	50%(NC)	18	Refrigerant service valve	1/4"Flare
4	Solenoid valve	75%(NC)	19	Solenoid valve	Stepless(NC or NO), option
5	Solenoid valve	35%(NC)	20	Liquid injection connector	5/8"Flare, option
6	Liquid(oil or refrigerant) injection connector	3/8"Flare, option	21	Suction flange	5"
7	Capillary		22	Cable box	Standard
8	Check valve	3"	23	Service flange	
9	Oil flow sight glass		24	Oil drain valve	option
10	Oil level sight glass		25	Oil level switch	option
11	Oil heater	150W/300W	26	Discharge temp. sensor	110°C
12	Oil filter cartridge		27	Safety Valve	1"NPT,option
13	Oil pressure differential switch	Connector, option	28	Economizer connector	1 1/8", solder
14	Oil connector(out)	5/8"Flare, option	29	Over flow port	option
15	Stop pin	option			

*All stop valves are optional.

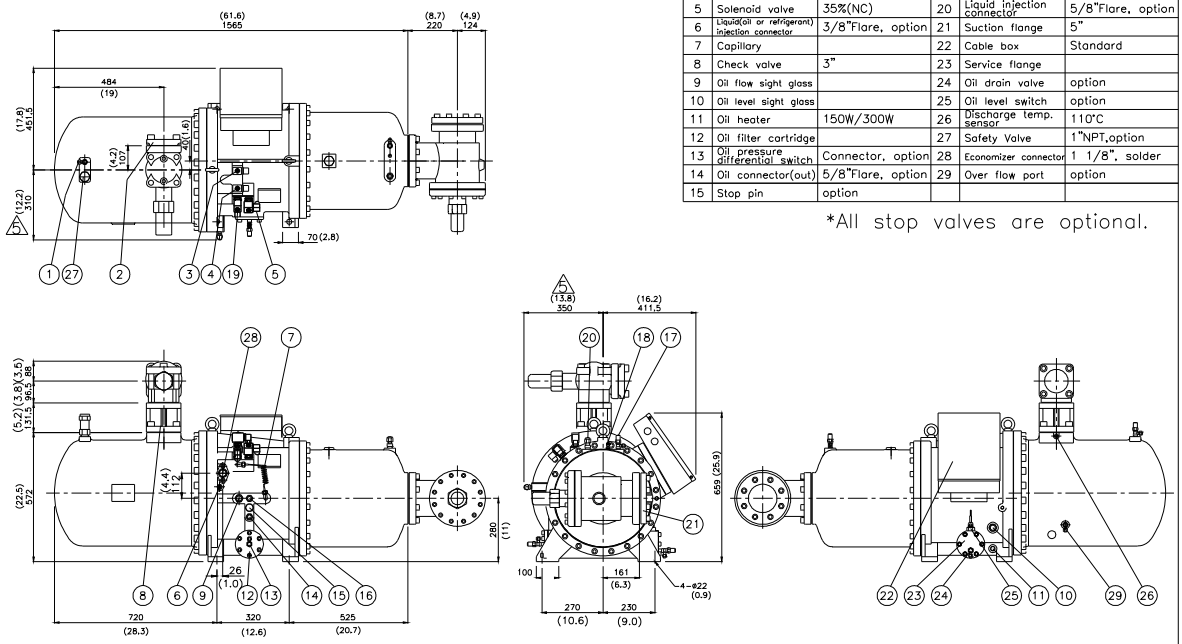

Item	Date	Modification
6		
5	2012.11.07	Dimension correction
4	2012.04.16	Delete1.Connector 2.Oil temp. sensor

UNIT:
SI: mm Imperial: (in)

Model: RC2-620A
Name: Compressor outline
HANBELL Ver. 05

No.	Name	Note	No.	Name	Note
1	Angle valve	1/4"Flare	16	Angle valve	1/4"Flare
2	Discharge flange	4"	17	Refrigerant service valve	1/4"Flare
3	Solenoid valve	50%(NC)	18	Solenoid valve	Stepless(NC or NO), option
4	Solenoid valve	75%(NC)	19	Liquid injection connector	5/8"Flare
5	Solenoid valve	35%(NC)	20	Suction flange	5"
6	Liquid(oil or refrigerant) injection connector	3/8"Flare	21	Cable box	Standard
7	Capillary		22	Service flange	
8	Check valve	4"	23	Oil drain valve	
9	Oil flow sight glass		24	Oil level switch	
10	Oil heater	150W/300W	25	Discharge temp. sensor	110°C
11	Oil filter cartridge		26	Safety Valve	1"NPT,option
12	Oil pressure differential switch	Connector, option	27	Economizer port	1 1/8", solder
13	Oil cooler connector(out)	3/4"Flare, option	28	Oil level sight glass	
14	Stop pin	option	29	Over flow port	option
15	Oil cooler connector(in)	3/4"Flare, option			

*All stop valves are optional.

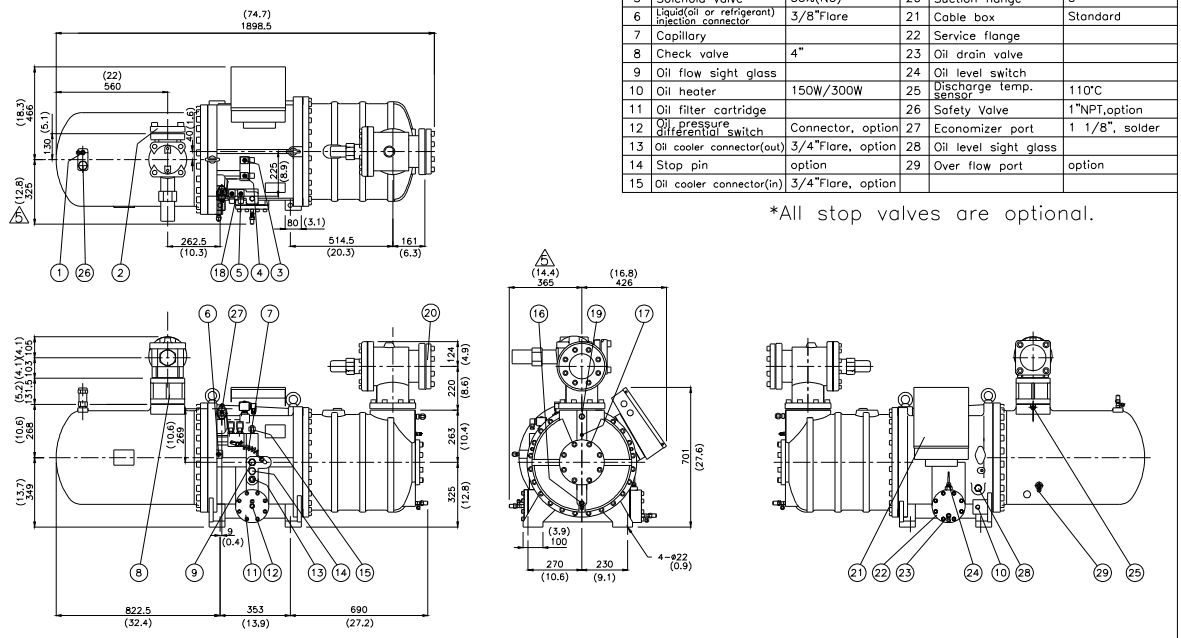

Item	Date	Modification
6		
5	2012.11.07	Dimension correction
4	2012.04.16	Delete1.Connector 2.Oil temp. sensor

UNIT:
SI: mm Imperial: (in)

Model: RC2-710A
Name: Compressor outline
HANBELL Ver. 05

No.	Name	Note	No.	Name	Note
1	Angle valve	1/4"Flare	16	Angle valve	1/4"Flare
2	Discharge flange	4"	17	Refrigerant service valve	1/4"Flare
3	Solenoid valve	50%(NC)	18	Solenoid valve	Stepless(NC or NO), option
4	Solenoid valve	75%(NC)	19	Liquid injection connector	5/8"Flare
5	Solenoid valve	30%(NC)	20	Suction flange	5"
6	Liquid(oil or refrigerant) injection connector	3/8"Flare	21	Cable box	Standard
7	Capillary		22	Service flange	
8	Check valve	4"	23	Oil drain valve	
9	Oil flow sight glass		24	Oil level switch	
10	Oil heater	150W/300W	25	Discharge temp. sensor	110°C
11	Oil filter cartridge		26	Safety Valve	1"NPT,option
12	Oil pressure differential switch	Connector, option	27	Economizer port	1 1/8", solder
13	Oil cooler connector(out)	3/4"Flare, option	28	Oil level sight glass	
14	Stop pin	option	29	Over flow port	option
15	Oil cooler connector(in)	3/4"Flare, option			

*All stop valves are optional.

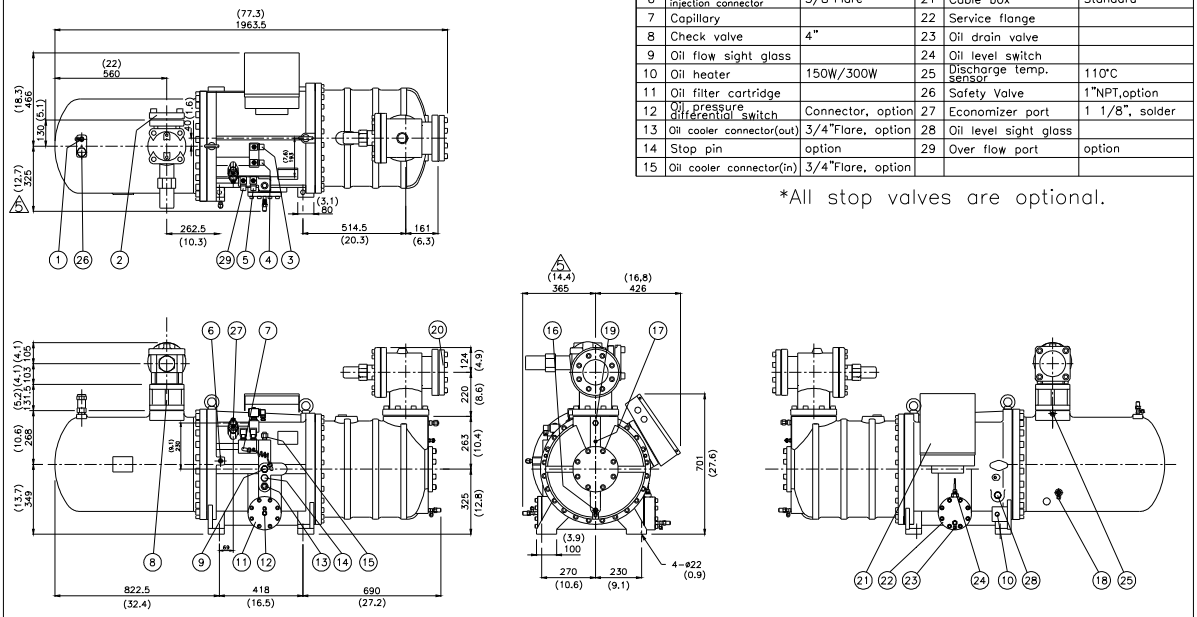

UNIT:
SI: mm Imperial: (in)

Item	Date	Modification
6		
5	2012.11.07	Dimension correction
4	2012.04.16	Delete1.Connector 2.Oil temp. sensor

Model	RC2-790A
Name	Compressor outline
HANBELL	Ver. 05

No.	Name	Note	No.	Name	Note
1	Angle valve	1/4"Flare	16	Angle valve	1/4"Flare
2	Discharge flange	4"	17	Refrigerant service valve	1/4"Flare
3	Solenoid valve	50%(NC)	18	Solenoid valve	Stepless(NC or NO), option
4	Solenoid valve	75%(NC)	19	Liquid injection connector	5/8"Flare
5	Solenoid valve	30%(NC)	20	Suction flange	5"
6	Liquid(oil or refrigerant) injection connector	3/8"Flare	21	Cable box	Standard
7	Capillary		22	Service flange	
8	Check valve	4"	23	Oil drain valve	
9	Oil flow sight glass		24	Oil level switch	
10	Oil heater	150W/300W	25	Discharge temp. sensor	110°C
11	Oil filter cartridge		26	Safety Valve	1"NPT,option
12	Oil pressure differential switch	Connector, option	27	Economizer port	1 1/8", solder
13	Oil cooler connector(out)	3/4"Flare, option	28	Oil level sight glass	
14	Stop pin	option	29	Over flow port	option
15	Oil cooler connector(in)	3/4"Flare, option			

*All stop valves are optional.

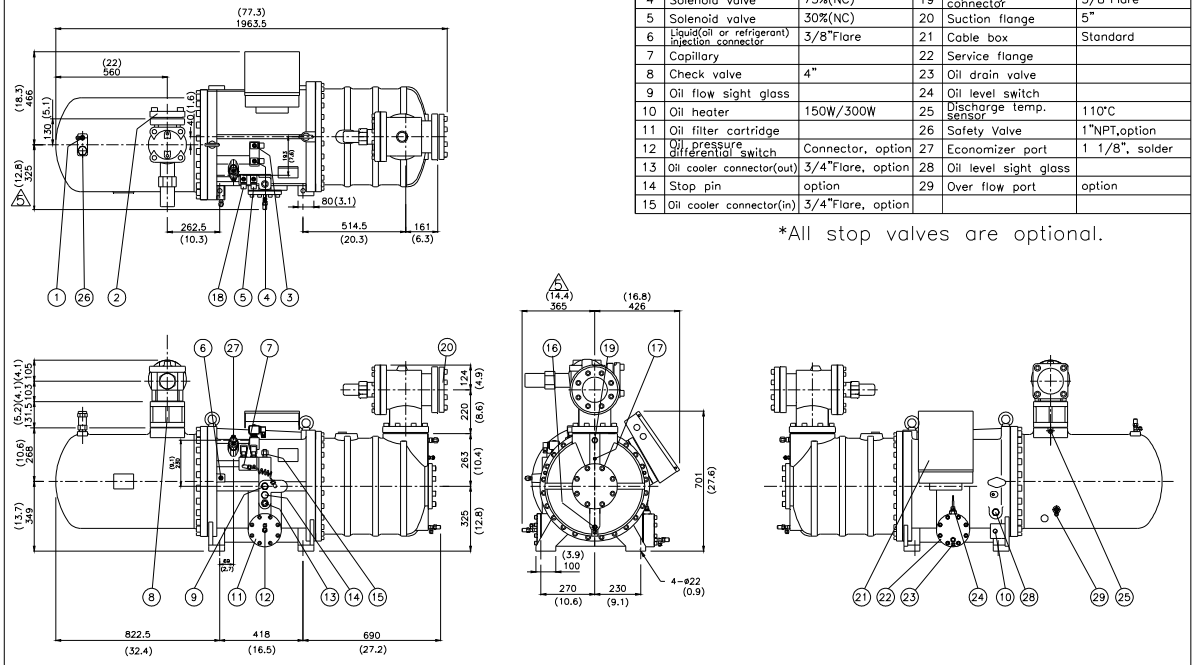

UNIT:
SI: mm Imperial: (in)

Item	Date	Modification
6		
5	2012.11.07	Dimension correction
4	2012.04.16	Delete1.Connector 2.Oil temp. sensor

Model	RC2-830A
Name	Compressor outline
HANBELL	Ver. 05

No.	Name	Note	No.	Name	Note
1	Angle valve	1/4"Flare	16	Angle valve	1/4"Flare
2	Discharge flange	4"	17	Refrigerant service valve	1/4"Flare
3	Solenoid valve	50%(NC)	18	Solenoid valve	Stepless(NC or NO), option
4	Solenoid valve	75%(NC)	19	Liquid injection connector	5/8"Flare
5	Solenoid valve	30%(NC)	20	Suction flange	5"
6	Liquid(oil or refrigerant) injection connector	3/8"Flare	21	Cable box	Standard
7	Capillary		22	Service flange	
8	Check valve	4"	23	Oil drain valve	
9	Oil flow sight glass		24	Oil level switch	
10	Oil heater	150W/300W	25	Discharge temp. sensor	110°C
11	Oil filter cartridge		26	Safety Valve	1"NPT,option
12	Oil pressure differential switch	Connector, option	27	Economizer port	1 1/8", solder
13	Oil cooler connector(out)	3/4"Flare, option	28	Oil level sight glass	
14	Stop pin	option	29	Over flow port	option
15	Oil cooler connector(in)	3/4"Flare, option			

*All stop valves are optional.

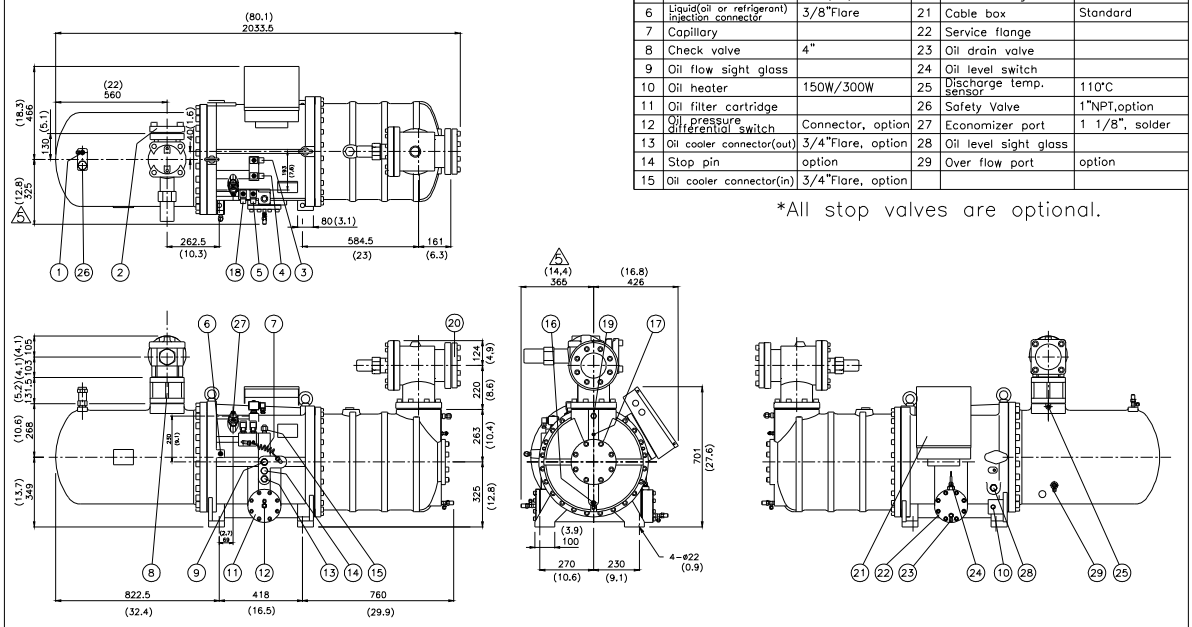

Item	Date	Modification
6		
5	2012.11.07	Dimension correction
4	2012.04.16	Delete1.Connector 2.Oil temp. sensor

Model	RC2-930A
Name	Compressor outline
HANBELL	Ver. 05

UNIT:
SI: mm Imperial: (in)

No.	Name	Note	No.	Name	Note
1	Angle valve	1/4"Flare	17	Oil cooler connector(in)	3/4"Flare
2	Safety valve	1 1/4",option	18	Oil flow sight glass	
3	Discharge flange	4"	19	Earth bolt	M8
4	Economizer port	1 3/8", solder	20	Stop Pin	option
5	Solenoid valve	Stepless(NC or NO),option	21	Oil cooler connector(out)	3/4"Flare,option
6	Solenoid valve	25%(NC)	22	Suction flange	6"
7	Solenoid valve	50%(NC)	23	Angle valve	1/4"Flare
8	Solenoid valve	75%(NC),option	24	Angle valve	1/4"Flare
9	Check valve	4"	25	Discharge temp. sensor	110°C
10	Displacement indicator	Option	26	Refrigerant service valve	1/4"Flare
11	Oil or Liquid refrigerant injection connector	5/8"Flare	27	Cable box	Standard
12	Oil sight glass	High side	28	service flange	
13	Oil sight glass	Low side	29	Oil drain valve	1/4"Flare
14	Oil equalization valve	1/2"Flare,option			
15	Oil outlet flange				
16	Oil filter connector	1 3/8", solder			

*All stop valve are optional

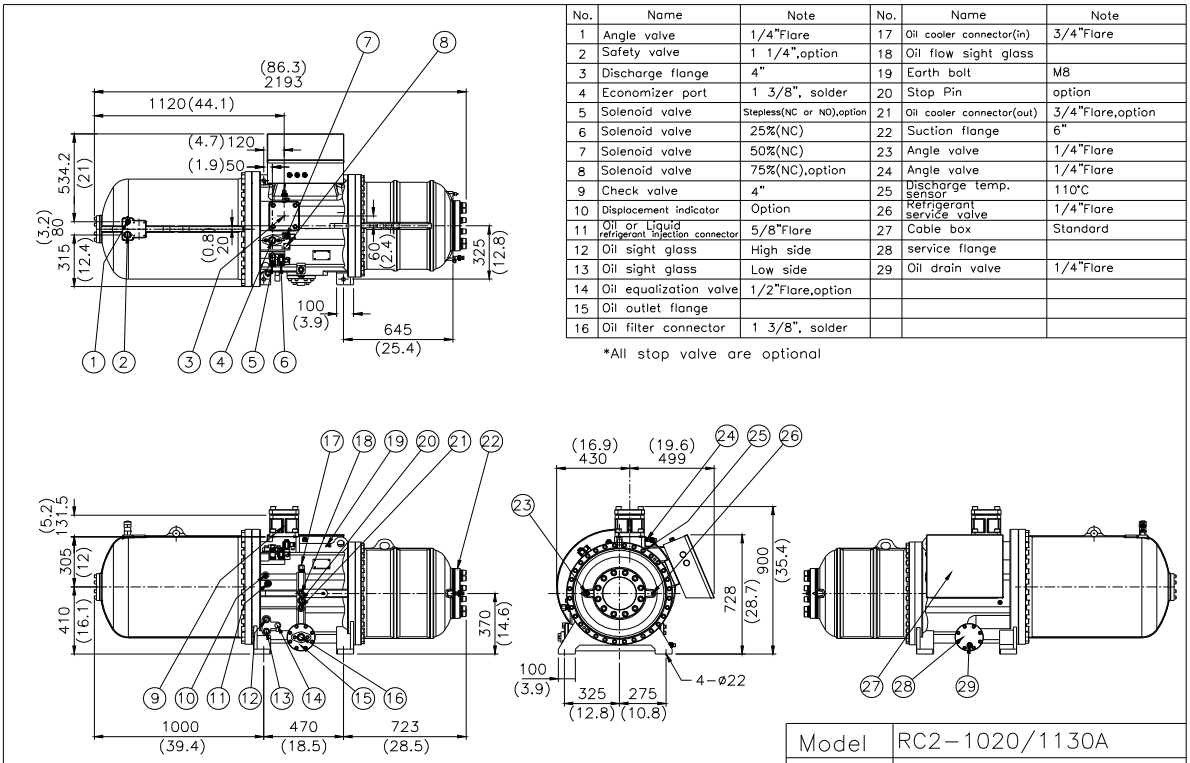

Model	RC2-1020/1130A
Name	Compressor outline
HANBELL	NO. Y1

Unit:
SI:mm Imperial:(in)

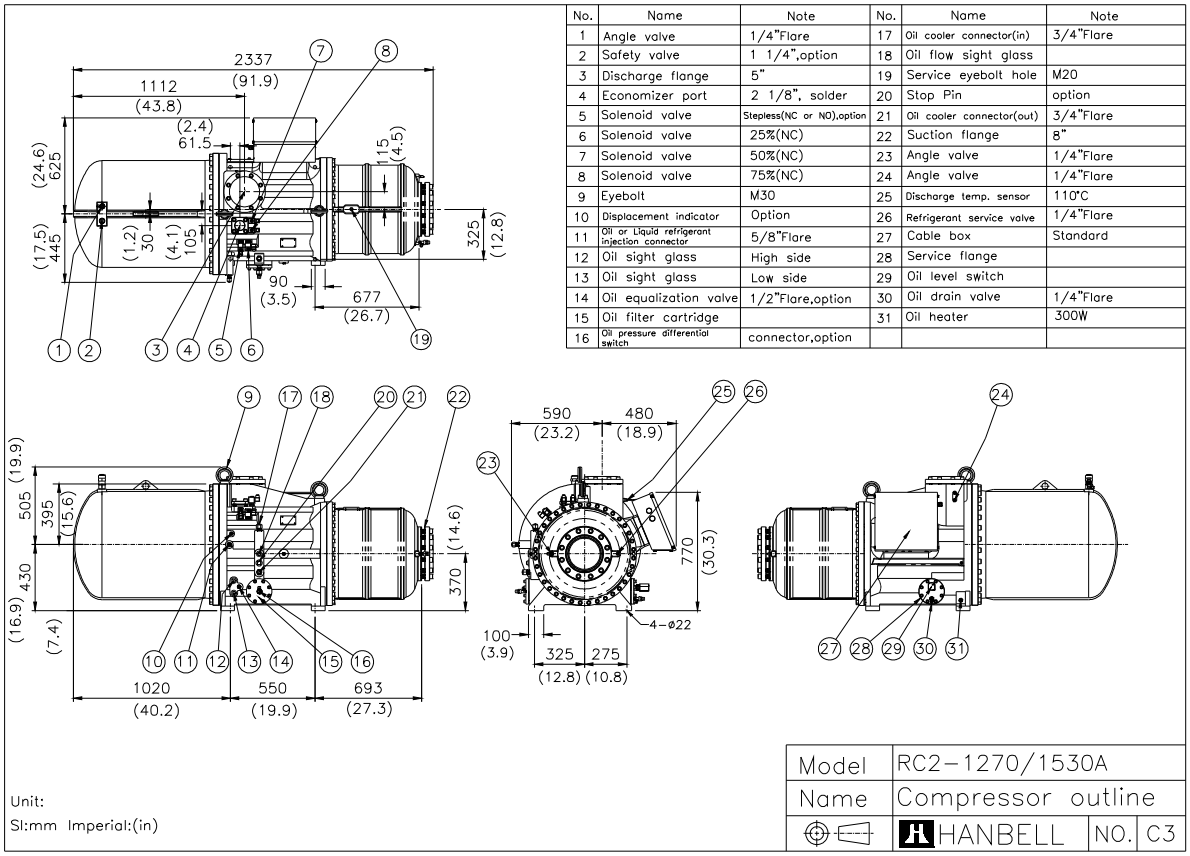

No.	Name	Note	No.	Name	Note
1	Angle valve	1/4"Flare	17	Oil cooler connector(in)	3/4"Flare
2	Safety valve	1 1/4",option	18	Oil flow sight glass	
3	Discharge flange	5"	19	Service eyebolt hole	M20
4	Economizer port	2 1/8", solder	20	Stop Pin	option
5	Solenoid valve	Stepless(NC or NO),option	21	Oil cooler connector(out)	3/4"Flare
6	Solenoid valve	25%(NC)	22	Suction flange	8"
7	Solenoid valve	50%(NC)	23	Angle valve	1/4"Flare
8	Solenoid valve	75%(NC)	24	Angle valve	1/4"Flare
9	Eyebolt	M30	25	Discharge temp. sensor	110°C
10	Displacement indicator	Option	26	Refrigerant service valve	1/4"Flare
11	Oil or Liquid refrigerant injection connector	5/8"Flare	27	Cable box	Standard
12	Oil sight glass	High side	28	Service flange	
13	Oil sight glass	Low side	29	Oil level switch	
14	Oil equalization valve	1/2"Flare,option	30	Oil drain valve	1/4"Flare
15	Oil filter cartridge		31	Oil heater	300W
16	Oil pressure differential switch	connector,option			

2. RC2-B outline drawings

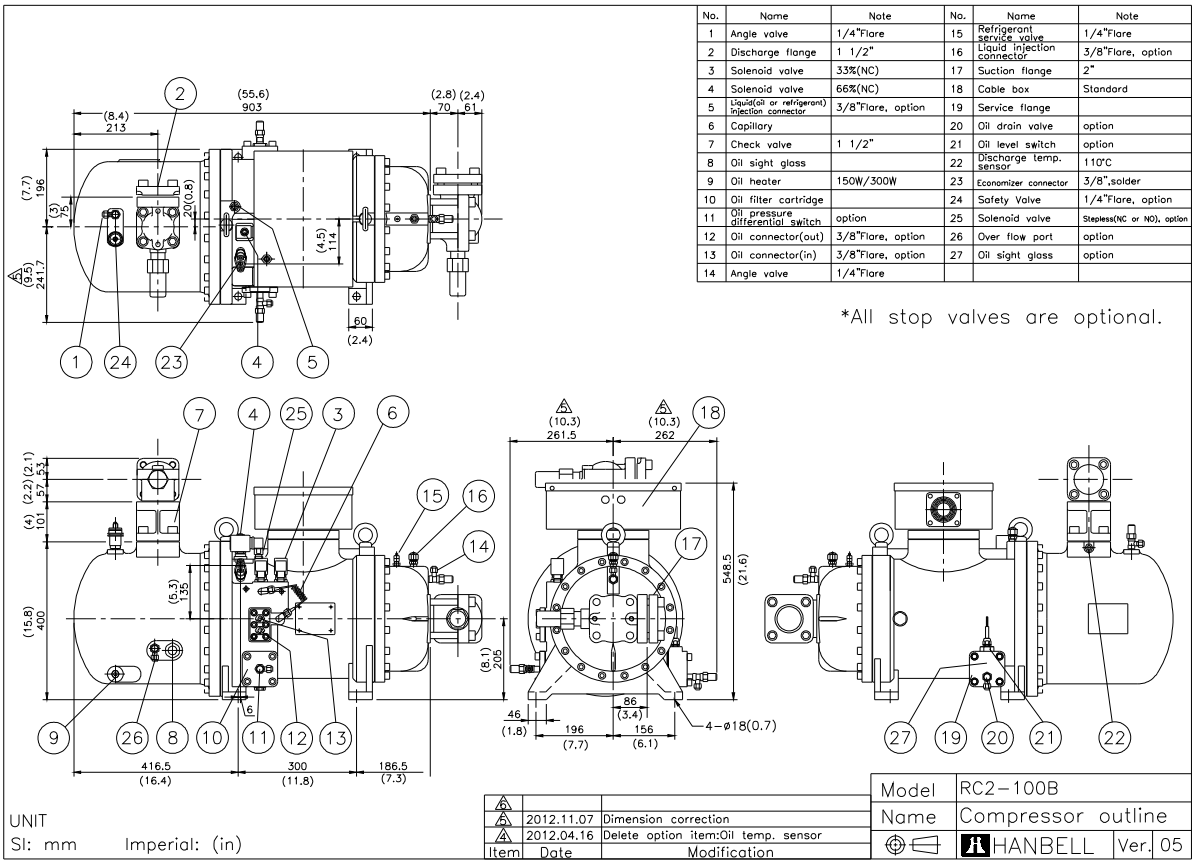

No.	Name	Note	No.	Name	Note
1	Angle valve	1/4"Flare	15	Refrigerant service valve	1/4"Flare
2	Discharge flange	1 1/2"	16	Liquid injection connector	3/8"Flare, option
3	Solenoid valve	33%(NC)	17	Suction flange	2"
4	Solenoid valve	66%(NC)	18	Cable box	Standard
5	Liquid(oil or refrigerant) injection connector	3/8"Flare, option	19	Service flange	
6	Capillary		20	Oil drain valve	option
7	Check valve	1 1/2"	21	Oil level switch	option
8	Oil sight glass		22	Discharge temp. sensor	110°C
9	Oil heater	150W/300W	23	Economizer connector	3/8",solder
10	Oil filter cartridge		24	Safety Valve	1/4"Flare, option
11	Oil pressure differential switch	option	25	Solenoid valve	Stepless(NC or NO), option
12	Oil connector(out)	3/8"Flare, option	26	Over flow port	option
13	Oil connector(in)	3/8"Flare, option	27	Oil sight glass	option
14	Angle valve	1/4"Flare			

*All stop valves are optional.

Item	Date	Modification
5		
3	2012.11.07	Dimension correction
4	2012.04.16	Delete option item:Oil temp. sensor

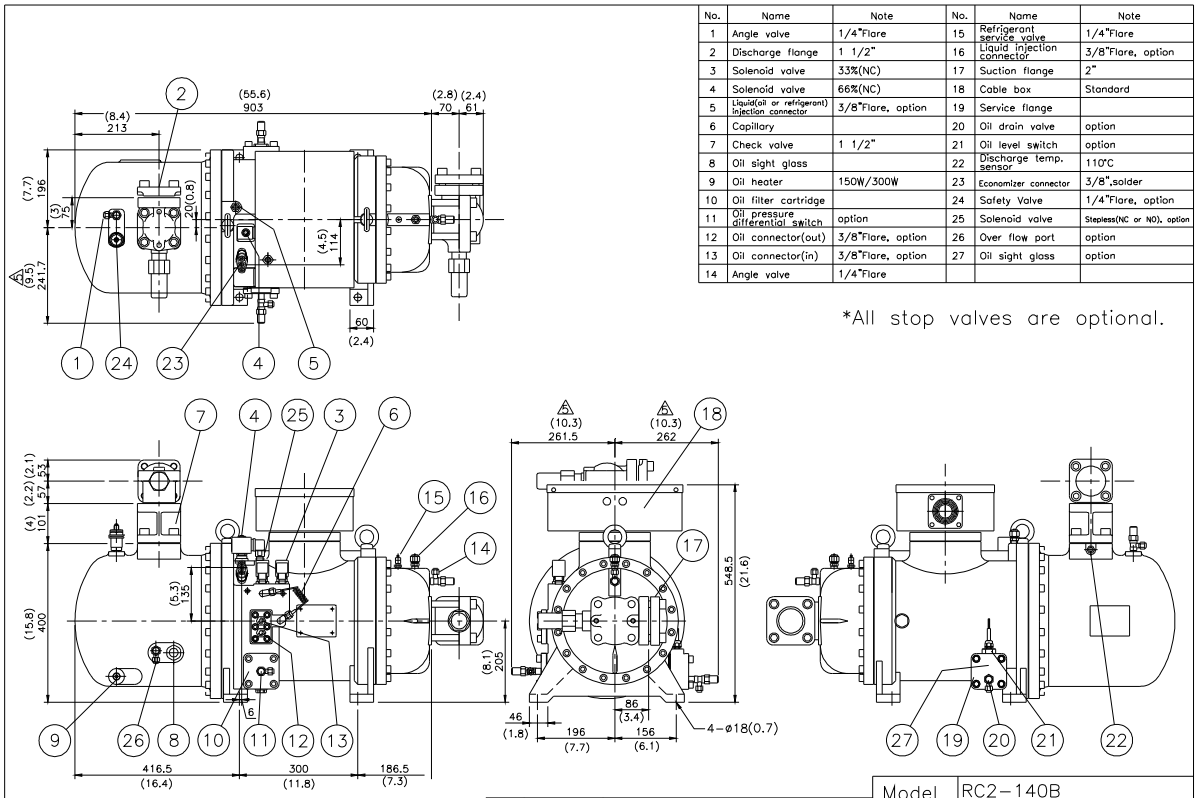

No.	Name	Note	No.	Name	Note
1	Angle valve	1/4"Flare	15	Refrigerant service valve	1/4"Flare
2	Discharge flange	1 1/2"	16	Liquid injection connector	3/8"Flare, option
3	Solenoid valve	33%(NC)	17	Suction flange	2"
4	Solenoid valve	66%(NC)	18	Cable box	Standard
5	Liquid(oil or refrigerant) injection connector	3/8"Flare, option	19	Service flange	
6	Capillary		20	Oil drain valve	option
7	Check valve	1 1/2"	21	Oil level switch	option
8	Oil sight glass		22	Discharge temp. sensor	110°C
9	Oil heater	150W/300W	23	Economizer connector	3/8",solder
10	Oil filter cartridge		24	Safety Valve	1/4"Flare, option
11	Oil pressure differential switch	option	25	Solenoid valve	Stepless(NC or NO), option
12	Oil connector(out)	3/8"Flare, option	26	Over flow port	option
13	Oil connector(in)	3/8"Flare, option	27	Oil sight glass	option
14	Angle valve	1/4"Flare			

*All stop valves are optional.

UNIT
SI: mm Imperial: (in)

Item	Date	Modification
6		
5	2012.11.07	Dimension correction
4	2012.04.16	Delete option item:Oil temp. sensor

Model	RC2-140B
Name	Compressor outline
HANBELL	Ver. 05

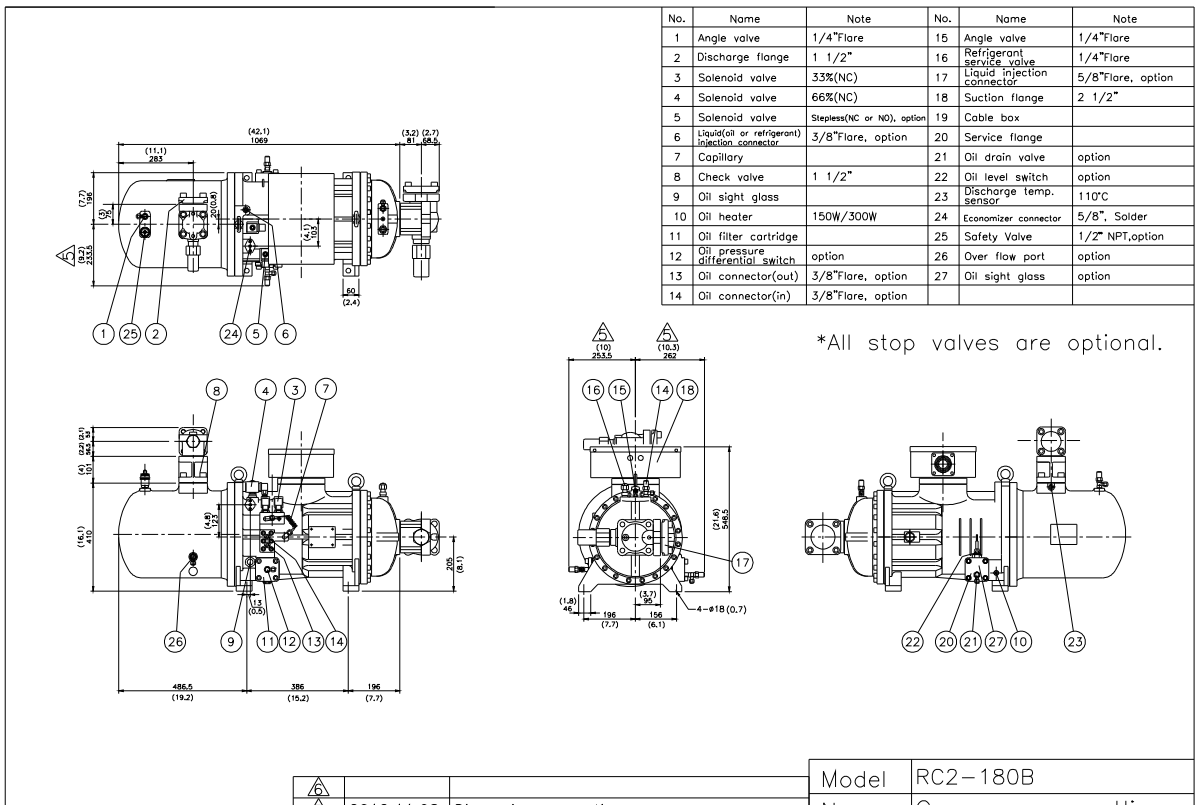

No.	Name	Note	No.	Name	Note
1	Angle valve	1/4"Flare	15	Angle valve	1/4"Flare
2	Discharge flange	1 1/2"	16	Refrigerant service valve	1/4"Flare
3	Solenoid valve	33%(NC)	17	Liquid injection connector	5/8"Flare, option
4	Solenoid valve	66%(NC)	18	Suction flange	2 1/2"
5	Solenoid valve	Stepless(NC or NO), option	19	Cable box	
6	Liquid(oil or refrigerant) injection connector	3/8"Flare, option	20	Service flange	
7	Capillary		21	Oil drain valve	option
8	Check valve	1 1/2"	22	Oil level switch	option
9	Oil sight glass		23	Discharge temp. sensor	110°C
10	Oil heater	150W/300W	24	Economizer connector	5/8", Solder
11	Oil filter cartridge		25	Safety Valve	1/2" NPT,option
12	Oil pressure differential switch	option	26	Over flow port	option
13	Oil connector(out)	3/8"Flare, option	27	Oil sight glass	option
14	Oil connector(in)	3/8"Flare, option			

*All stop valves are optional.

UNIT
SI: mm Imperial: (in)

Item	Date	Modification
6		
5	2012.11.08	Dimension correction
4	2012.04.17	Delete 1.Connector 2.Oil temp. sensor

Model	RC2-180B
Name	Compressor outline
HANBELL	Ver. 05

No.	Name	Note	No.	Name	Note
1	Angle valve	1/4"Flare	16	Angle valve	1/4"Flare
2	Discharge flange	1 1/2"	17	Refrigerant service valve	1/4"Flare
3	Solenoid valve	50%(NC)	18	Solenoid valve	Stepless(NC or NO),option
4	Solenoid valve	75%(NC)	19	Liquid injection connector	5/8"Flare, option
5	Solenoid valve	25%(NC)	20	Suction flange	2 1/2"
6	Liquid(oil or refrigerant) injection connector	3/8"Flare, option	21	Cable box	Standard
7	Capillary		22	Service flange	
8	Check valve	1 1/2"	23	Oil drain valve	option
9	Oil sight glass	Low side	24	Oil level switch	option
10	Oil heater	150W/300W	25	Discharge temp. sensor	110°C
11	Oil filter cartridge		26	Safety Valve	1/2" NPT,option
12	Oil pressure differential switch	Connector, option	27	Economizer port	5/8", solder
13	Oil connector(out)	5/8"Flare, option	28	Oil sight glass	High side
14	Stop pin	option	29	Over flow port	option
15	Oil connector(in)	5/8"Flare, option			

*All stop valves are optional

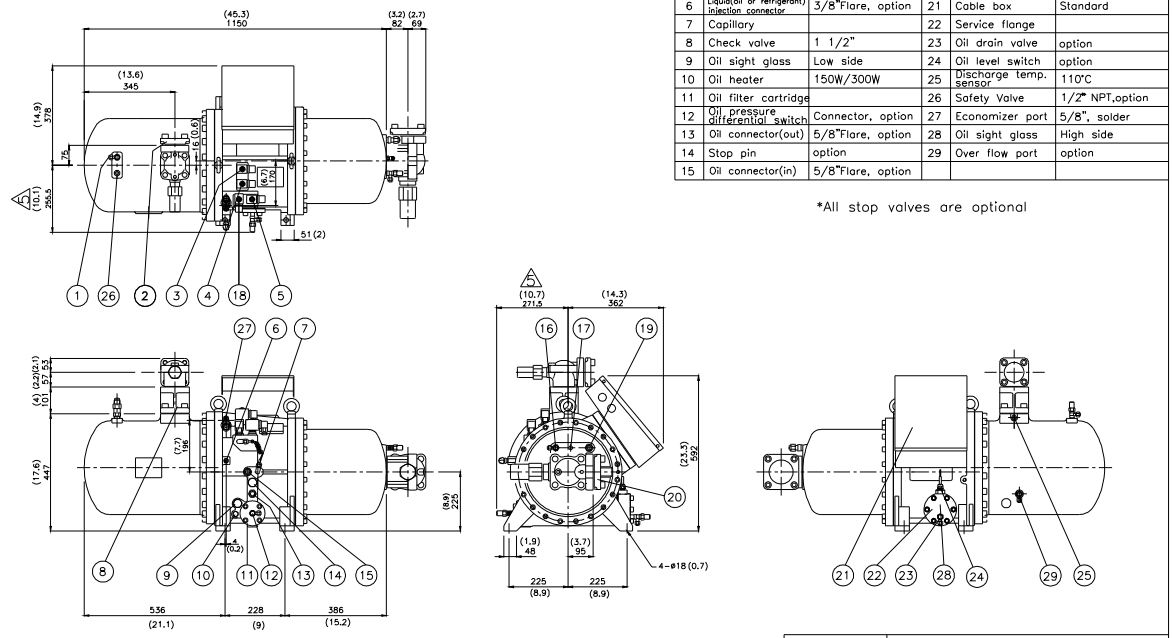

Item	Date	Modification
6		
5	2012.11.06	Dimension correction
4	2012.04.17	Delete 1.Connector 2.Oil temp. sensor

UNIT
SI: mm Imperial: (in)

Model: RC2-200B
Name: Compressor outline
HANBELL Ver. 05

No.	Name	Note	No.	Name	Note
1	Angle valve	1/4"Flare	16	Angle valve	1/4"Flare
2	Discharge flange	2"	17	Refrigerant service valve	1/4"Flare
3	Solenoid valve	50%(NC)	18	Solenoid valve	
4	Solenoid valve	75%(NC)	19	Liquid injection connector	Stepless(NC or NO), option
5	Solenoid valve	35%(NC)	20	Suction flange	5/8"Flare, option
6	Liquid(oil or refrigerant) injection connector	3/8"Flare, option	21	Cable box	Standard
7	Capillary		22	Service flange	
8	Check valve	2"	23	Oil drain valve	option
9	Oil sight glass	Low side	24	Oil level switch	option
10	Oil heater	150W/300W	25	Discharge temp. sensor	110°C
11	Oil filter cartridge		26	Safety Valve	1/2"NPT,option
12	Oil pressure differential switch	Connector, option	27	Economizer port	5/8", solder
13	Oil connector(out)	5/8"Flare, option	28	Oil sight glass	High side
14	Stop pin	option	29	Over flow port	option
15	Oil connector(in)	5/8"Flare, option			

*All stop valves are optional

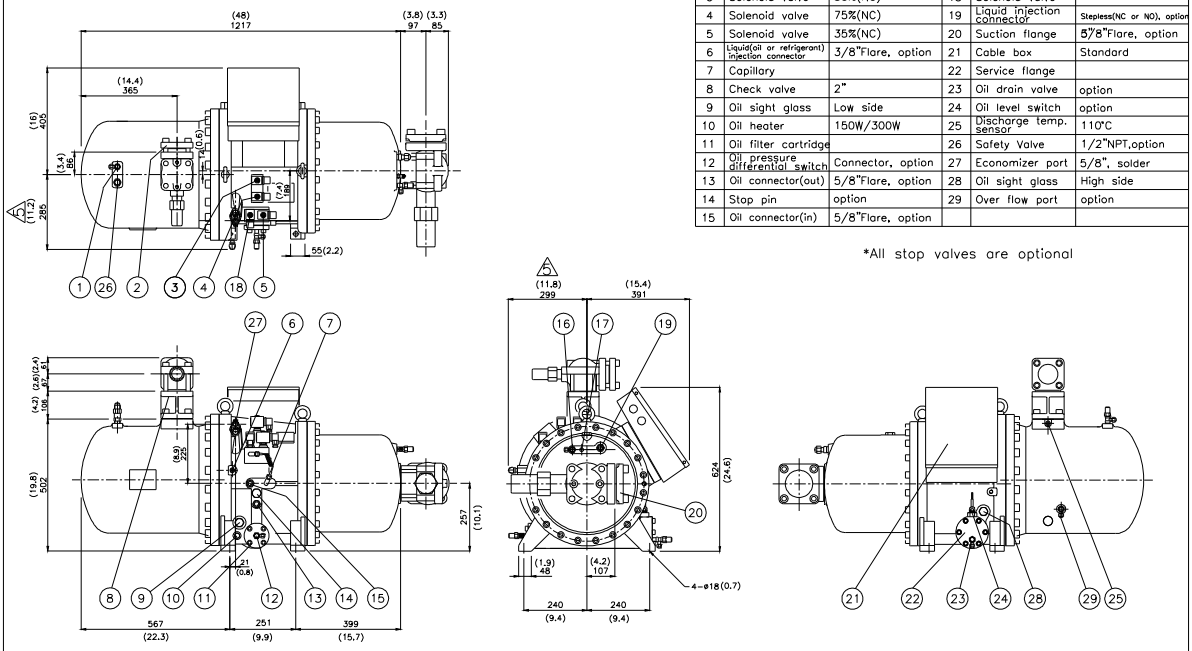

Item	Date	Modification
6		
5	2012.11.06	Dimension correction
4	2012.04.17	Delete 1.Connector 2.Oil temp. sensor

UNIT
SI: mm Imperial: (in)

Model: RC2-230B
Name: Compressor outline
HANBELL Ver. 05

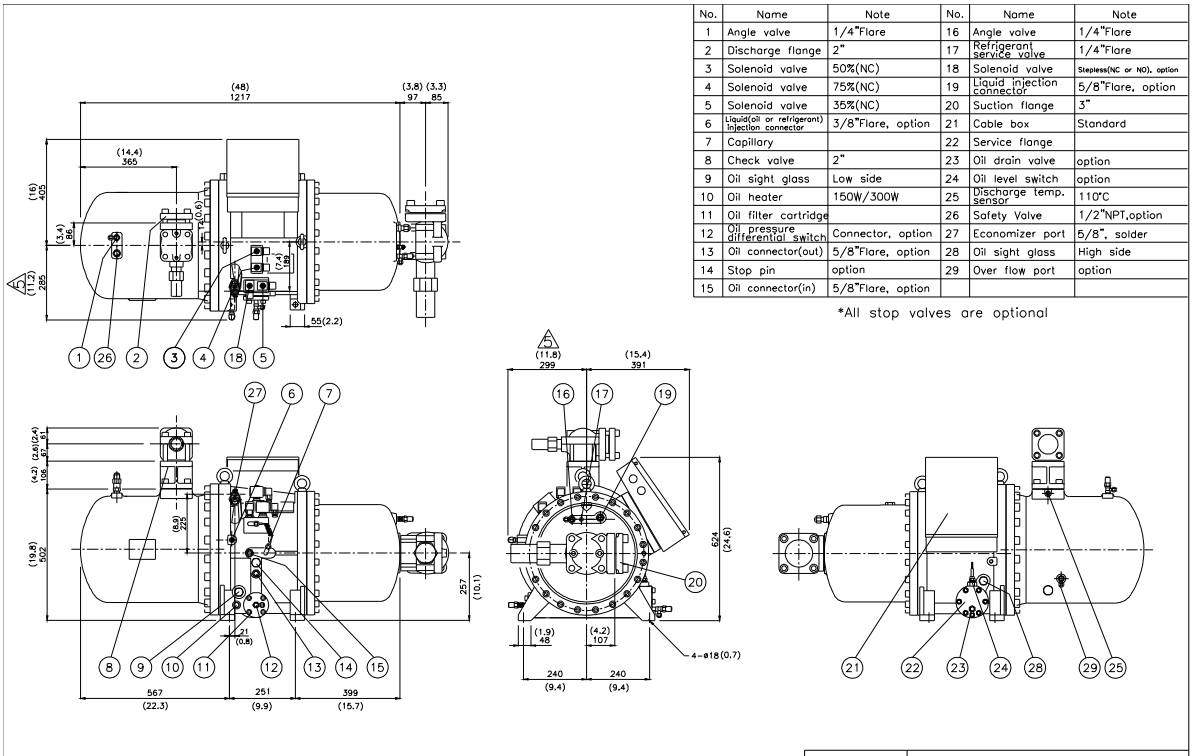

No.	Name	Note	No.	Name	Note
1	Angle valve	1/4"Flare	16	Angle valve	1/4"Flare
2	Discharge flange	2"	17	Refrigerant service valve	1/4"Flare
3	Solenoid valve	50%(NC)	18	Solenoid valve	Stepless(NC or NO), option
4	Solenoid valve	75%(NC)	19	Liquid injection connector	5/8"Flare, option
5	Solenoid valve	35%(NC)	20	Suction flange	3"
6	Liquid(oil or refrigerant) injection connector	3/8"Flare, option	21	Cable box	Standard
7	Capillary		22	Service flange	
8	Check valve	2"	23	Oil drain valve	option
9	Oil sight glass	Low side	24	Oil level switch	option
10	Oil heater	150W/300W	25	Discharge temp. sensor	110°C
11	Oil filter cartridge		26	Safety Valve	1/2"NPT,option
12	Oil pressure differential switch	Connector, option	27	Economizer port	5/8", solder
13	Oil connector(out)	5/8"Flare, option	28	Oil sight glass	High side
14	Stop pin	option	29	Over flow port	option
15	Oil connector(in)	5/8"Flare, option			

*All stop valves are optional

UNIT
SI: mm Imperial: (in)

Item	Date	Modification
6		
5	2012.11.06	Dimension correction
4	2012.04.17	Delete 1.Connector 2.Oil temp. sensor

Model	RC2-260B
Name	Compressor outline
HANBELL	Ver. 05

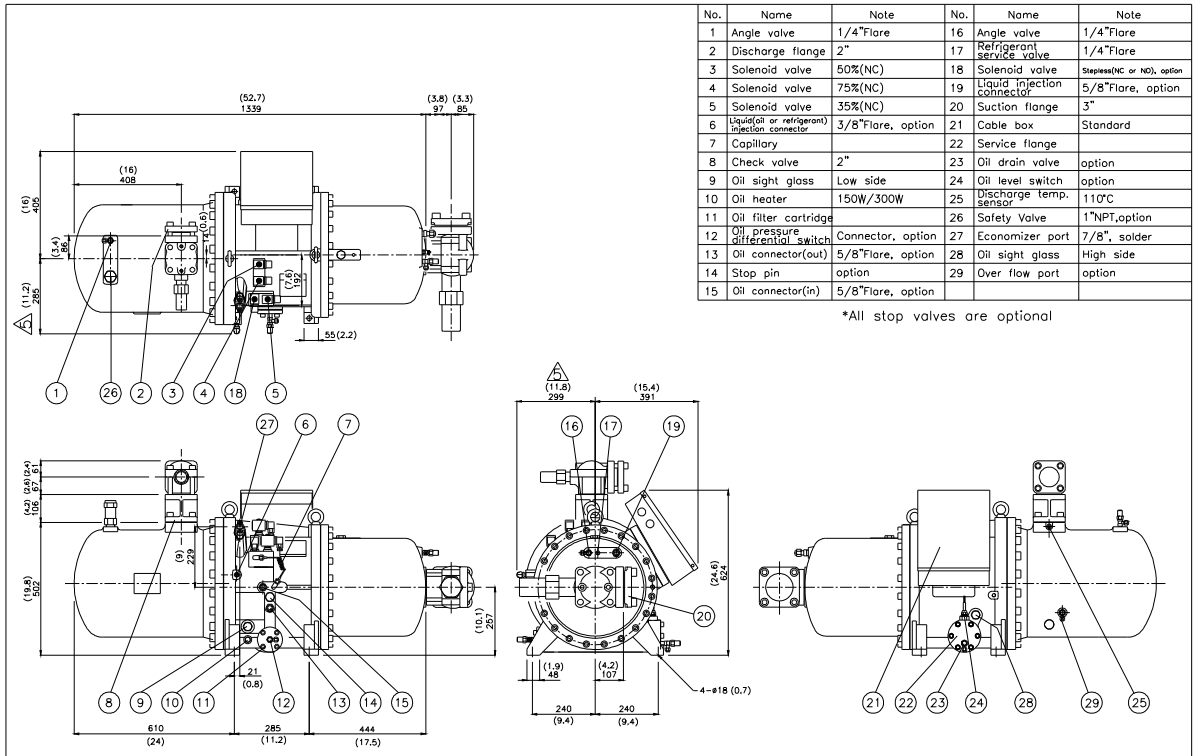

No.	Name	Note	No.	Name	Note
1	Angle valve	1/4"Flare	16	Angle valve	1/4"Flare
2	Discharge flange	2"	17	Refrigerant service valve	1/4"Flare
3	Solenoid valve	50%(NC)	18	Solenoid valve	Stepless(NC or NO), option
4	Solenoid valve	75%(NC)	19	Liquid injection connector	5/8"Flare, option
5	Solenoid valve	35%(NC)	20	Suction flange	3"
6	Liquid(oil or refrigerant) injection connector	3/8"Flare, option	21	Cable box	Standard
7	Capillary		22	Service flange	
8	Check valve	2"	23	Oil drain valve	option
9	Oil sight glass	Low side	24	Oil level switch	option
10	Oil heater	150W/300W	25	Discharge temp. sensor	110°C
11	Oil filter cartridge		26	Safety Valve	1"NPT,option
12	Oil pressure differential switch	Connector, option	27	Economizer port	7/8", solder
13	Oil connector(out)	5/8"Flare, option	28	Oil sight glass	High side
14	Stop pin	option	29	Over flow port	option
15	Oil connector(in)	5/8"Flare, option			

*All stop valves are optional

UNIT
SI: mm Imperial: (in)

Item	Date	Modification
6		
5	2012.11.06	Dimension correction
4	2012.04.18	Delete 1.Connector 2.Oil temp. sensor

Model	RC2-300B
Name	Compressor outline
HANBELL	Ver. 05

No.	Name	Note	No.	Name	Note
1	Angle valve	1/4"Flare	16	Angle valve	1/4"Flare
2	Discharge flange	2"	17	Refrigerant service valve	1/4"Flare
3	Solenoid valve	50%(NC)	18	Solenoid valve	Stepless(NC or NO), option
4	Solenoid valve	75%(NC)	19	Liquid injection connector	5/8"Flare, option
5	Solenoid valve	35%(NC)	20	Suction flange	3"
6	Liquid(oil or refrigerant) injection connector	3/8"Flare, option	21	Cable box	Standard
7	Capillary		22	Service flange	
8	Check valve	2"	23	Oil drain valve	option
9	Oil sight glass	Low side	24	Oil level switch	option
10	Oil heater	150W/300W	25	Discharge temp. sensor	110°C
11	Oil filter cartridge		26	Safety Valve	1/2"NPT,option
12	Oil pressure differential switch	Connector, option	27	Economizer port	7/8", solder
13	Oil connector(out)	5/8"Flare, option	28	Oil sight glass	High side
14	Stop pin	option	29	Over flow port	option
15	Oil connector(in)	5/8"Flare, option			

*All stop valves are optional

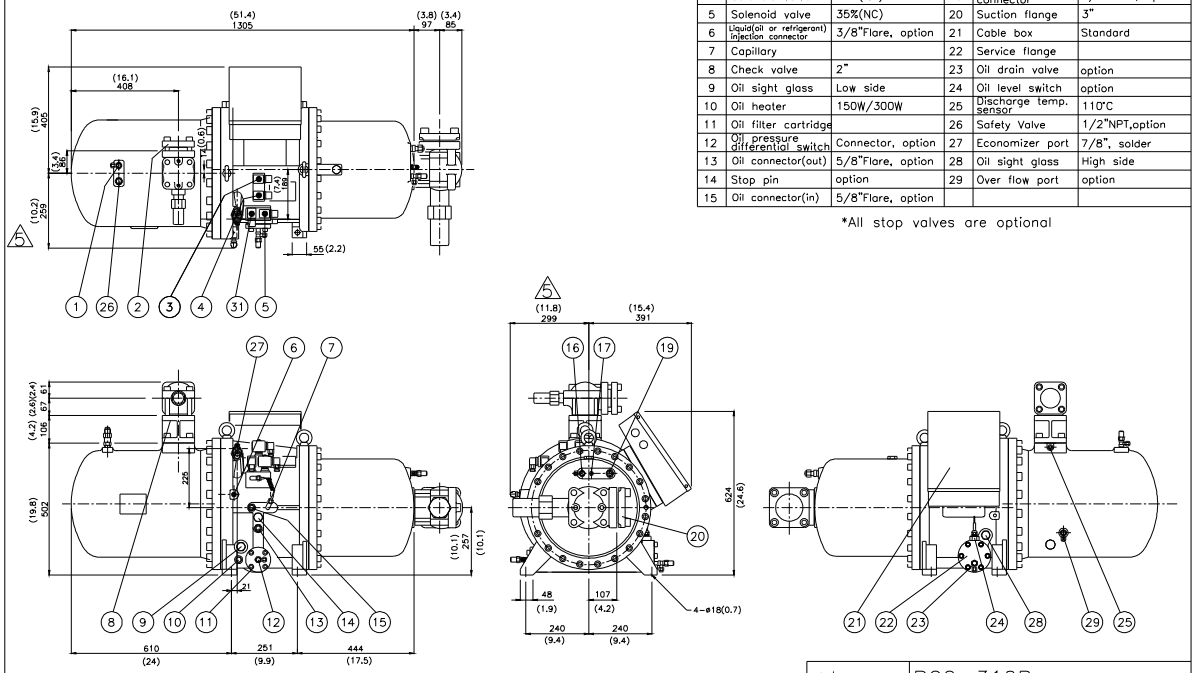

UNIT
SI: mm Imperial: (in)

Item	Date	Modification
6		
5	2012.11.08	Dimension correction
4	2012.04.18	Delete 1.Connector 2.Oil temp. sensor

Model	RC2-310B	
Name	Compressor outline	
	HANBELL	Ver. 05

No.	Name	Note	No.	Name	Note
1	Angle valve	1/4"Flare	16	Angle valve	1/4"Flare
2	Discharge flange	2"	17	Refrigerant service valve	1/4"Flare
3	Solenoid valve	50%(NC)	18	Solenoid valve	Stepless(NC or NO), option
4	Solenoid valve	75%(NC)	19	Liquid injection connector	5/8"Flare, option
5	Solenoid valve	35%(NC)	20	Suction flange	3"
6	Liquid(oil or refrigerant) injection connector	3/8"Flare, option	21	Cable box	Standard
7	Capillary		22	Service flange	
8	Check valve	2"	23	Oil drain valve	option
9	Oil sight glass	Low side	24	Oil level switch	option
10	Oil heater	150W/300W	25	Discharge temp. sensor	110°C
11	Oil filter cartridge		26	Safety Valve	1"NPT,option
12	Oil pressure differential switch	Connector, option	27	Economizer port	7/8", solder
13	Oil connector(out)	5/8"Flare, option	28	Oil sight glass	High side
14	Stop pin	option	29	Over flow port	option
15	Oil connector(in)	5/8"Flare, option			

*All stop valves are optional

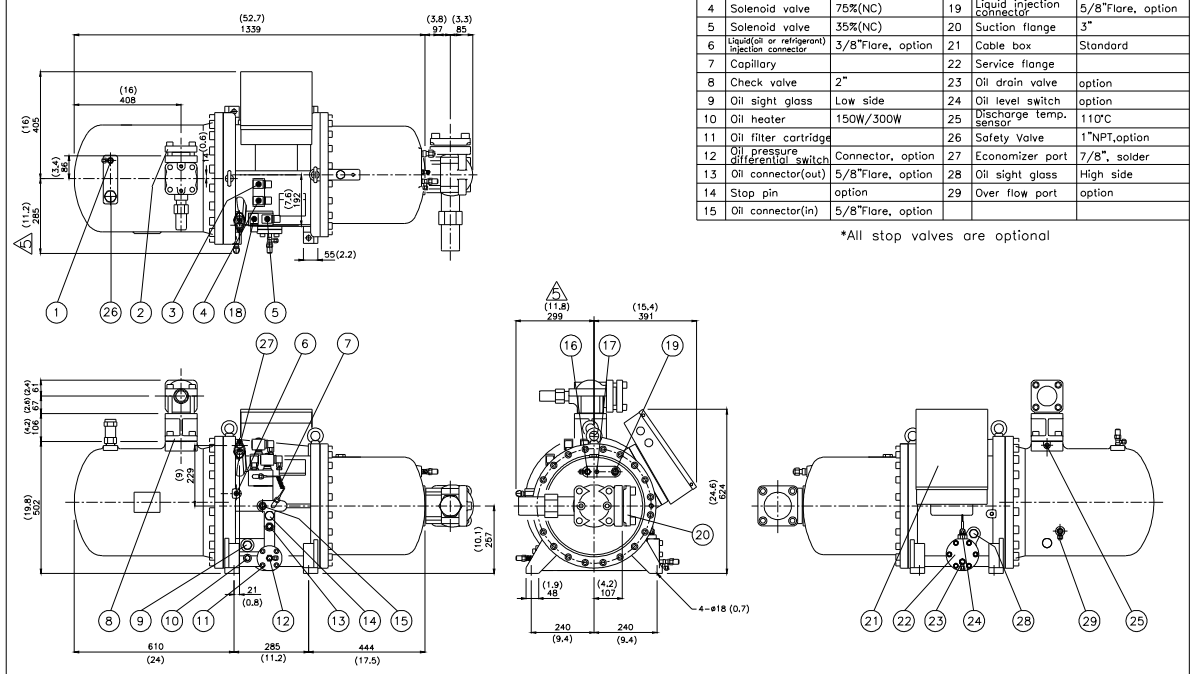

UNIT
SI: mm Imperial: (in)

Item	Date	Modification
6		
5	2012.11.06	Dimension correction
4	2012.04.18	Delete 1.Connector 2.Oil temp. sensor

Model	RC2-320B	
Name	Compressor outline	
	HANBELL	Ver. 05

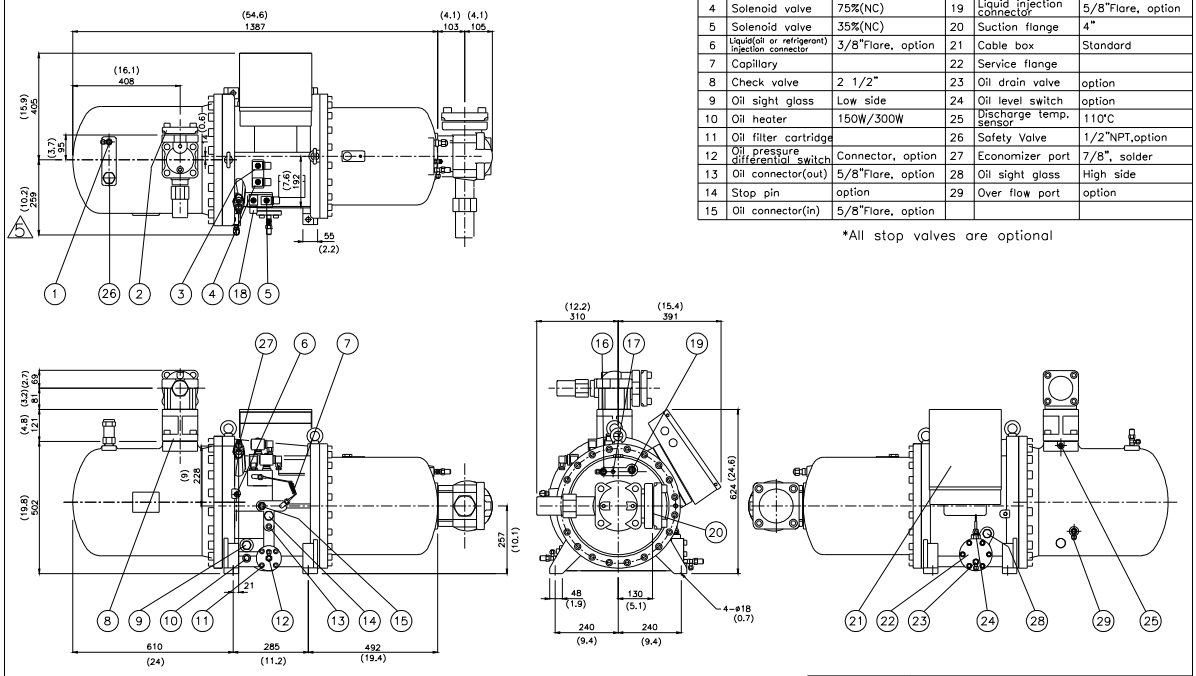

No.	Name	Note	No.	Name	Note
1	Angle valve	1/4"Flare	16	Angle valve	1/4"Flare
2	Discharge flange	2 1/2"	17	Refrigerant service valve	1/4"Flare
3	Solenoid valve	50%(NC)	18	Solenoid valve	Stepless(NC or NO), option
4	Solenoid valve	75%(NC)	19	Liquid injection connector	5/8"Flare, option
5	Solenoid valve	35%(NC)	20	Suction flange	4"
6	Liquid(oil or refrigerant) injection connector	3/8"Flare, option	21	Cable box	Standard
7	Capillary		22	Service flange	
8	Check valve	2 1/2"	23	Oil drain valve	option
9	Oil sight glass	Low side	24	Oil level switch	option
10	Oil heater	150W/300W	25	Discharge temp. sensor	110°C
11	Oil filter cartridge		26	Safety Valve	1/2"NPT,option
12	Oil pressure differential switch	Connector, option	27	Economizer port	7/8", solder
13	Oil connector(out)	5/8"Flare, option	28	Oil sight glass	High side
14	Stop pin	option	29	Over flow port	option
15	Oil connector(in)	5/8"Flare, option			

*All stop valves are optional

UNIT
SI: mm Imperial: (in)

Item	Date	Modification
6		
5	2012.11.08	Dimension correction
4	2012.04.18	Delete 1.Connector 2.Oil temp. sensor

Model	RC2-340B
Name	Compressor outline
HANBELL	Ver. 05

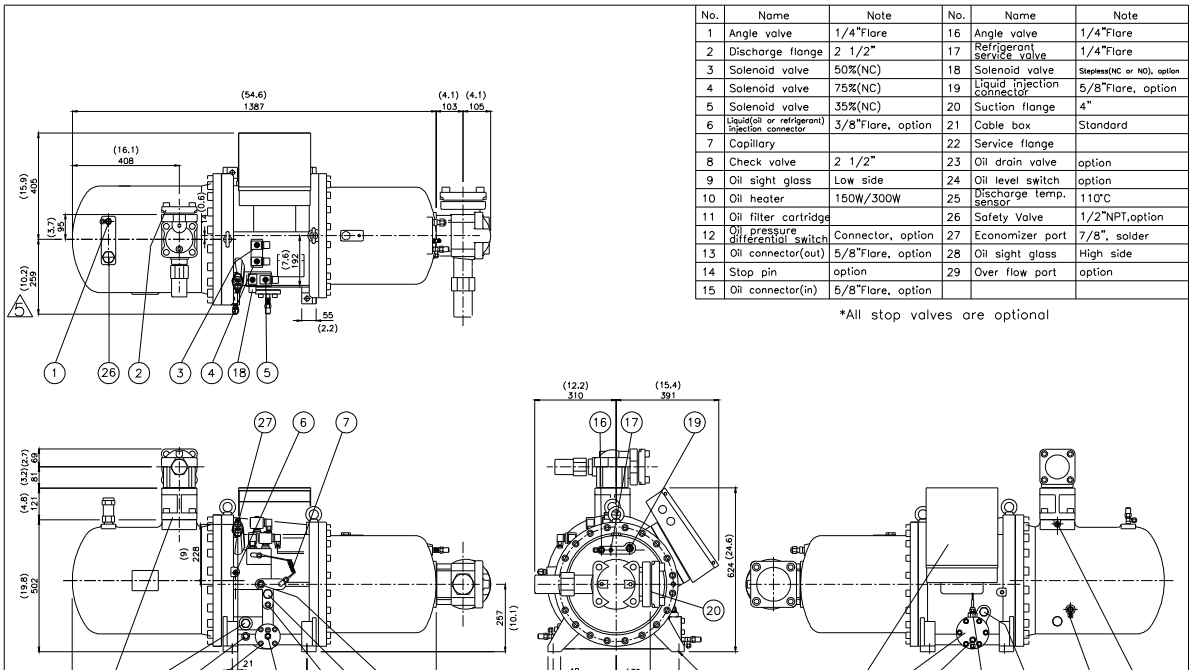

No.	Name	Note	No.	Name	Note
1	Angle valve	1/4"Flare	16	Angle valve	1/4"Flare
2	Discharge flange	2 1/2"	17	Refrigerant service valve	1/4"Flare
3	Solenoid valve	50%(NC)	18	Solenoid valve	Stepless(NC or NO), option
4	Solenoid valve	75%(NC)	19	Liquid injection connector	5/8"Flare, option
5	Solenoid valve	35%(NC)	20	Suction flange	4"
6	Liquid(oil or refrigerant) injection connector	3/8"Flare, option	21	Cable box	Standard
7	Capillary		22	Service flange	
8	Check valve	2 1/2"	23	Oil drain valve	option
9	Oil sight glass	Low side	24	Oil level switch	option
10	Oil heater	150W/300W	25	Discharge temp. sensor	110°C
11	Oil filter cartridge		26	Safety Valve	1/2"NPT,option
12	Oil pressure differential switch	Connector, option	27	Economizer port	7/8", solder
13	Oil connector(out)	5/8"Flare, option	28	Oil sight glass	High side
14	Stop pin	option	29	Over flow port	option
15	Oil connector(in)	5/8"Flare, option			

*All stop valves are optional

UNIT
SI: mm Imperial: (in)

Item	Date	Modification
6		
5	2012.11.08	Dimension correction
4	2012.04.18	Delete 1.Connector 2.Oil temp. sensor

Model	RC2-370B
Name	Compressor outline
HANBELL	Ver. 05

No.	Name	Note	No.	Name	Note
1	Angle valve	1/4"Flare	16	Angle valve	1/4"Flare
2	Discharge flange	2 1/2"	17	Refrigerant service valve	1/4"Flare
3	Solenoid valve	50%(NC)	18	Solenoid valve	Stepless(NC or NO), option
4	Solenoid valve	75%(NC)	19	Liquid injection connector	5/8"Flare, option
5	Solenoid valve	35%(NC)	20	Suction flange	4"
6	Liquid(oil or refrigerant) injection connector	3/8"Flare, option	21	Cable box	Standard
7	Capillary		22	Service flange	
8	Check valve	2 1/2"	23	Oil drain valve	option
9	Oil sight glass	Low side	24	Oil level switch	option
10	Oil heater	150W/300W	25	Discharge temp. sensor	110℃
11	Oil filter cartridge		26	Safety Valve	1"NPT,option
12	Oil pressure differential switch	Connector, option	27	Economizer port	7/8", solder
13	Oil connector(out)	5/8"Flare, option	28	Oil sight glass	High side
14	Stop pin	option	29	Over flow port	option
15	Oil connector(in)	5/8"Flare, option			

*All stop valves are optional

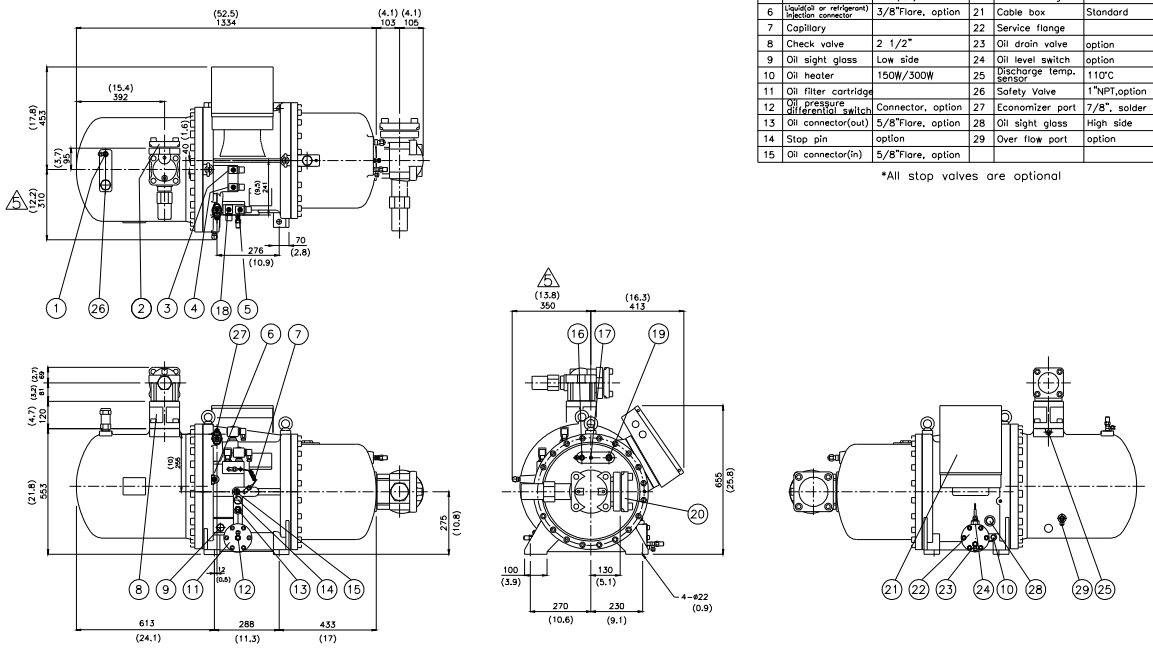

UNIT
SI: mm Imperial: (in)

Item	Date	Modification
6		
5	2012.11.06	Dimension correction
4	2012.04.16	Delete 1.Connector 2.Oil temp. sensor

Model: RC2-410B
Name: Compressor outline
HANBELL Ver. 05

No.	Name	Note	No.	Name	Note
1	Angle valve	1/4"Flare	16	Angle valve	1/4"Flare
2	Discharge flange	2 1/2"	17	Refrigerant service valve	1/4"Flare
3	Solenoid valve	50%(NC)	18	Solenoid valve	Stepless(NC or NO), option
4	Solenoid valve	75%(NC)	19	Liquid injection connector	5/8"Flare, option
5	Solenoid valve	35%(NC)	20	Suction flange	4"
6	Liquid(oil or refrigerant) injection connector	3/8"Flare, option	21	Cable box	Standard
7	Capillary		22	Service flange	
8	Check valve	2 1/2"	23	Oil drain valve	option
9	Oil sight glass	Low side	24	Oil level switch	option
10	Oil heater	150W/300W	25	Discharge temp. sensor	110℃
11	Oil filter cartridge		26	Safety Valve	1"NPT,option
12	Oil pressure differential switch	Connector, option	27	Economizer port	7/8", solder
13	Oil connector(out)	5/8"Flare, option	28	Oil sight glass	High side
14	Stop pin	option	29	Over flow port	option
15	Oil connector(in)	5/8"Flare, option			

*All stop valves are optional

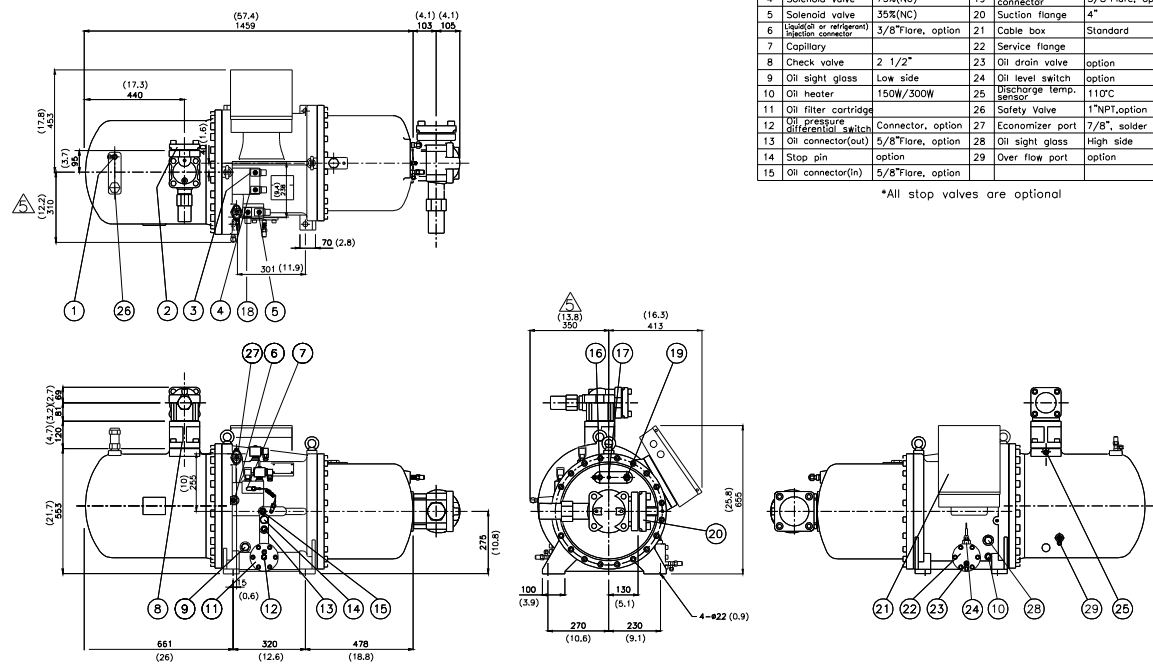

UNIT
SI: mm Imperial: (in)

Item	Date	Modification
6		
5	2012.11.06	Dimension correction
4	2012.04.19	Delete 1.Connector 2.Oil temp. sensor

Model: RC2-470B
Name: Compressor outline
HANBELL Ver. 05

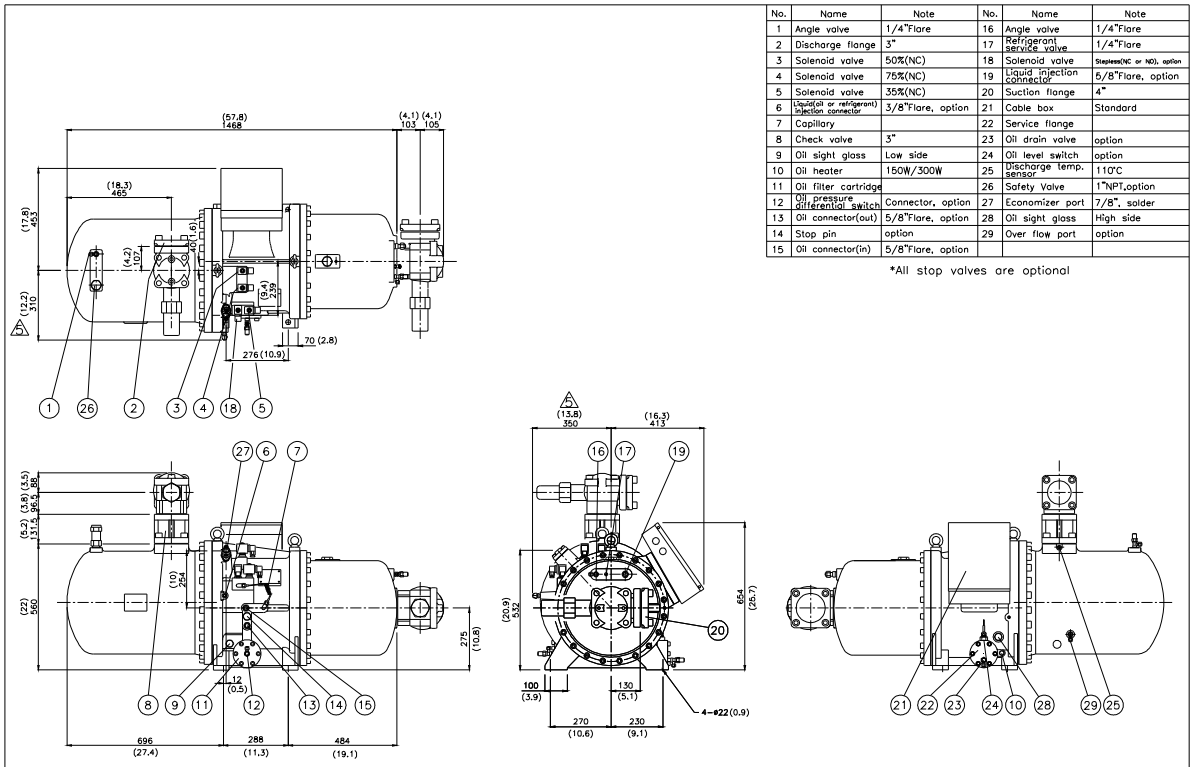

No.	Name	Note	No.	Name	Note
1	Angle valve	1/4"Flare	16	Angle valve	1/4"Flare
2	Discharge flange	3"	17	Refrigerant service valve	1/4"Flare
3	Solenoid valve	50%(NC)	18	Solenoid valve	Stepless(NC or NO), option
4	Solenoid valve	75%(NC)	19	Liquid injection connector	5/8"Flare, option
5	Solenoid valve	35%(NC)	20	Suction flange	4"
6	Liquid(oil or refrigerant) injection connector	3/8"Flare, option	21	Cable box	Standard
7	Capillary		22	Service flange	
8	Check valve	3"	23	Oil drain valve	option
9	Oil sight glass	Low side	24	Oil level switch	option
10	Oil heater	150W/300W	25	Discharge temp. sensor	110°C
11	Oil filter cartridge		26	Safety Valve	1"NPT,option
12	Oil pressure differential switch	Connector, option	27	Economizer port	7/8", solder
13	Oil connector(out)	5/8"Flare, option	28	Oil sight glass	High side
14	Stop pin	option	29	Over flow port	option
15	Oil connector(in)	5/8"Flare, option			

*All stop valves are optional

UNIT
SI: mm Imperial: (in)

Item	Date	Modification
5		
3	2012.11.06	Dimension correction
4	2012.04.19	Delete 1.Oil sight glass 2.Connector 3.Oil temp. sensor

Model	RC2-510B
Name	Compressor outline
HANBELL	Ver. 05

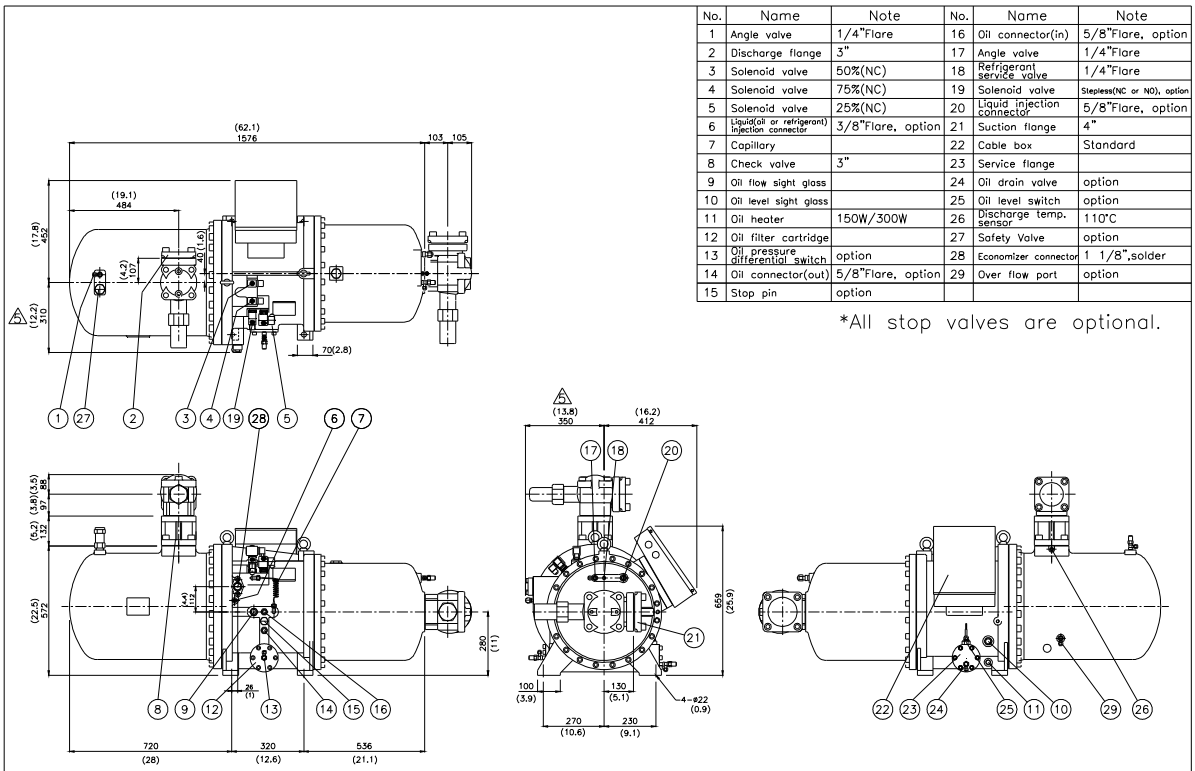

No.	Name	Note	No.	Name	Note
1	Angle valve	1/4"Flare	16	Oil connector(in)	5/8"Flare, option
2	Discharge flange	3"	17	Angle valve	1/4"Flare
3	Solenoid valve	50%(NC)	18	Refrigerant service valve	1/4"Flare
4	Solenoid valve	75%(NC)	19	Solenoid valve	Stepless(NC or NO), option
5	Solenoid valve	25%(NC)	20	Liquid injection connector	5/8"Flare, option
6	Liquid(oil or refrigerant) injection connector	3/8"Flare, option	21	Suction flange	4"
7	Capillary		22	Cable box	Standard
8	Check valve	3"	23	Service flange	
9	Oil flow sight glass		24	Oil drain valve	option
10	Oil level sight glass		25	Oil level switch	option
11	Oil heater	150W/300W	26	Discharge temp. sensor	110°C
12	Oil filter cartridge		27	Safety Valve	option
13	Oil pressure differential switch	option	28	Economizer connector	1 1/8",solder
14	Oil connector(out)	5/8"Flare, option	29	Over flow port	option
15	Stop pin	option			

*All stop valves are optional.

Item	Date	Modification
5		
3	2012.11.06	Dimension correction
4	2012.04.19	Delete 1.Connector 2.Oil temp. sensor

Model	RC2-550B
Name	Compressor outline
HANBELL	Ver. 05

No.	Name	Note	No.	Name	Note
1	Angle valve	1/4"Flare	16	Angle valve	1/4"Flare
2	Discharge flange	3"	17	Refrigerant service valve	1/4"Flare
3	Solenoid valve	50%(NC)	18	Solenoid valve	Stepless(NC or NO), option
4	Solenoid valve	75%(NC)	19	Liquid injection connector	5/8"Flare, option
5	Solenoid valve	35%(NC)	20	Suction flange	4"
6	Liquid(oil or refrigerant) injection connector	3/8"Flare, option	21	Cable box	Standard
7	Capillary		22	Service flange	
8	Check valve	3"	23	Oil drain valve	option
9	Oil sight glass	Low side	24	Oil level switch	option
10	Oil heater	150W/300W	25	Discharge temp. sensor	110°C
11	Oil filter cartridge		26	Safety Valve	1"NPT,option
12	Oil pressure differential switch	Connector, option	27	Economizer port	1 1/8", solder
13	Oil connector(out)	5/8"Flare, option	28	Oil sight glass	High side
14	Stop pin	option	29	Over flow port	option
15	Oil connector(in)	5/8"Flare, option			

*All stop valves are optional

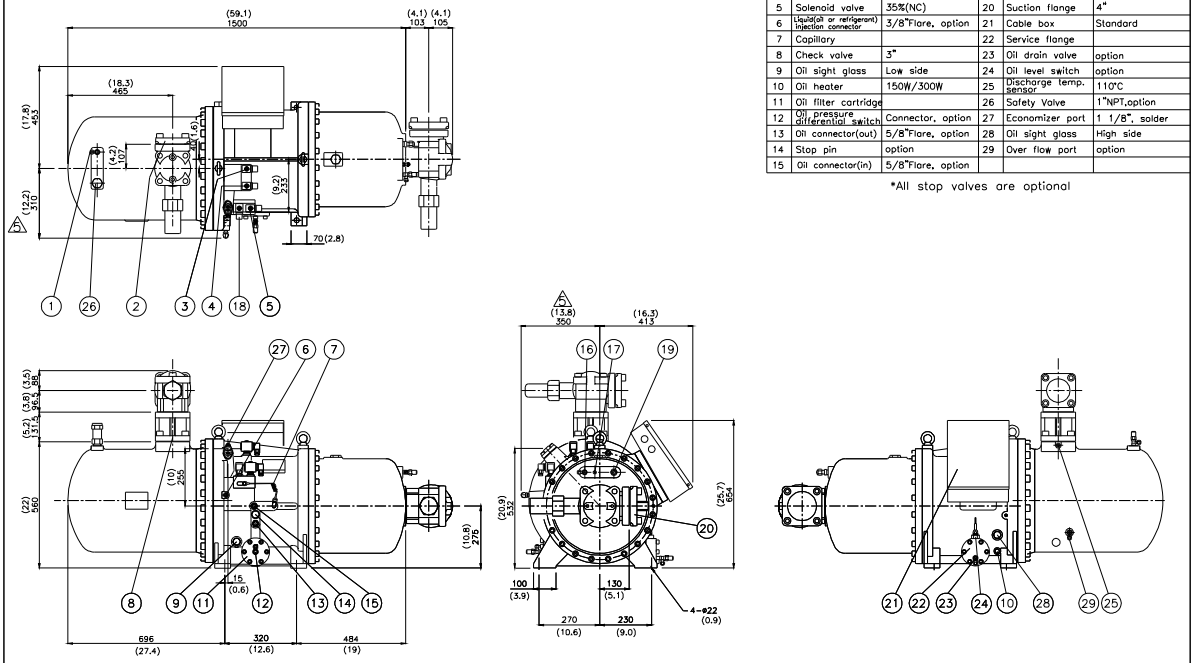

UNIT
SI: mm Imperial: (in)

Item	Date	Modification
6		
5	2012.11.06	Dimension correction
4	2012.04.19	Delete 1.Connector 2.Oil temp. sensor

Model	RC2-580B
Name	Compressor outline
HANBELL	Ver. 05

No.	Name	Note	No.	Name	Note
1	Angle valve	1/4"Flare	16	Oil connector(in)	5/8"Flare, option
2	Discharge flange	3"	17	Angle valve	1/4"Flare
3	Solenoid valve	50%(NC)	18	Refrigerant service valve	1/4"Flare
4	Solenoid valve	75%(NC)	19	Solenoid valve	Stepless(NC or NO), option
5	Solenoid valve	35%(NC)	20	Liquid injection connector	5/8"Flare, option
6	Liquid(oil or refrigerant) injection connector	3/8"Flare, option	21	Suction flange	5"
7	Capillary		22	Cable box	Standard
8	Check valve	3"	23	Service flange	
9	Oil flow sight glass		24	Oil drain valve	option
10	Oil level sight glass		25	Oil level switch	option
11	Oil heater	150W/300W	26	Discharge temp. sensor	110°C
12	Oil filter cartridge		27	Safety Valve	1"NPT,option
13	Oil pressure differential switch	Connector, option	28	Economizer connector	1 1/8", solder
14	Oil connector(out)	5/8"Flare, option	29	Over flow port	option
15	Stop pin	option			

*All stop valves are optional.

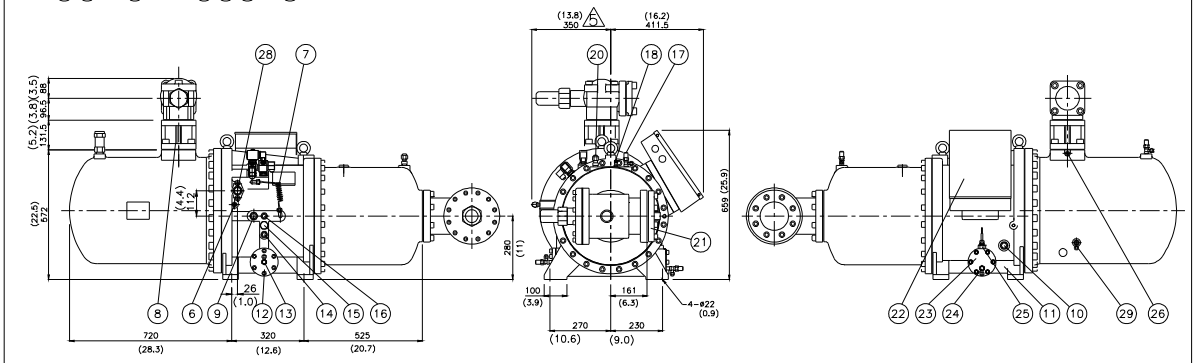

UNIT:
SI: mm Imperial: (in)

Item	Date	Modification
6		
5	2012.11.08	Dimension correction
4	2012.04.19	Delete1.Connector 2.Oil temp. sensor

Model	RC2-620B
Name	Compressor outline
HANBELL	Ver. 05

No.	Name	Note	No.	Name	Note
1	Angle valve	1/4"Flare	16	Angle valve	1/4"Flare
2	Discharge flange	4"	17	Refrigerant service valve	1/4"Flare
3	Solenoid valve	50%(NC)	18	Solenoid valve	Stepless(NC or NO), option
4	Solenoid valve	75%(NC)	19	Liquid injection connector	5/8"Flare
5	Solenoid valve	35%(NC)	20	Suction flange	5"
6	Liquid(oil or refrigerant) injection connector	3/8"Flare	21	Cable box	Standard
7	Capillary		22	Service flange	
8	Check valve	4"	23	Oil drain valve	
9	Oil flow sight glass		24	Oil level switch	
10	Oil heater	150W/300W	25	Discharge temp. sensor	110°C
11	Oil filter cartridge		26	Safety Valve	1"NPT,option
12	Oil pressure differential switch	Connector, option	27	Economizer port	1 1/8", solder
13	Oil cooler connector(out)	3/4"Flare, option	28	Oil level sight glass	
14	Stop pin	option	29	Over flow port	option
15	Oil cooler connector(in)	3/4"Flare, option			

*All stop valves are optional.

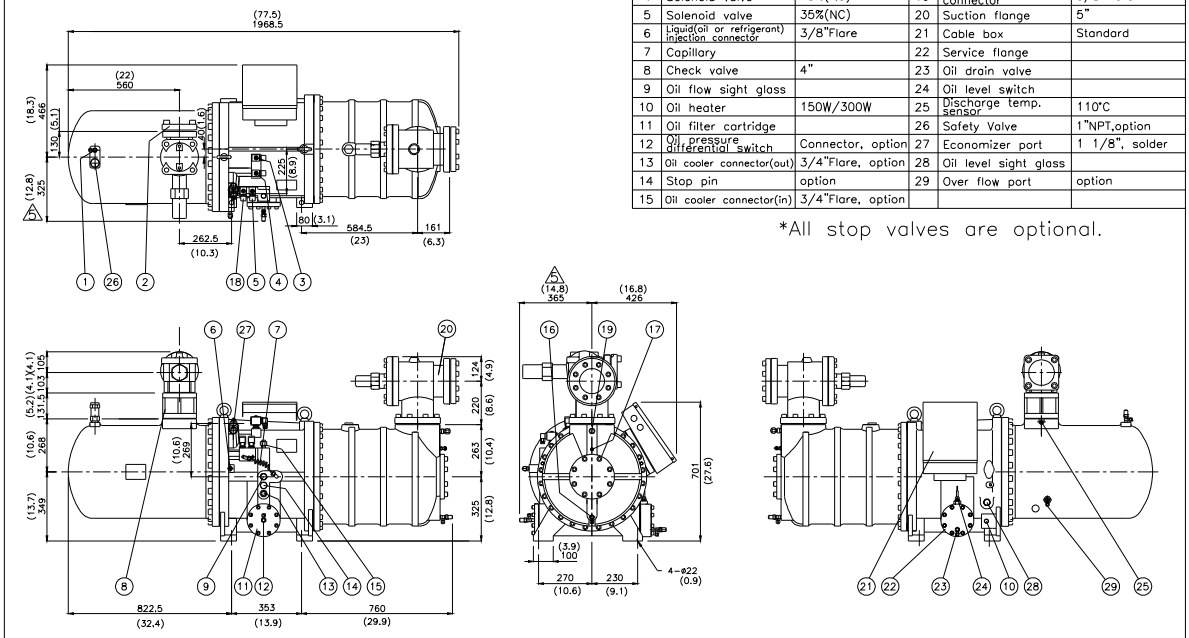

UNIT:
SI: mm Imperial: (in)

Item	Date	Modification
6		
5	2012.11.08	Dimension correction
4	2012.04.19	Delete1.Connector 2.Oil temp. sensor

Model	RC2-710B
Name	Compressor outline
HANBELL	Ver. 05

No.	Name	Note	No.	Name	Note
1	Angle valve	1/4"Flare	16	Angle valve	1/4"Flare
2	Discharge flange	4"	17	Refrigerant service valve	1/4"Flare
3	Solenoid valve	50%(NC)	18	Solenoid valve	Stepless(NC or NO), option
4	Solenoid valve	75%(NC)	19	Liquid injection connector	5/8"Flare
5	Solenoid valve	30%(NC)	20	Suction flange	5"
6	Liquid(oil or refrigerant) injection connector	3/8"Flare	21	Cable box	Standard
7	Capillary		22	Service flange	
8	Check valve	4"	23	Oil drain valve	
9	Oil flow sight glass		24	Oil level switch	
10	Oil heater	150W/300W	25	Discharge temp. sensor	110°C
11	Oil filter cartridge		26	Safety Valve	1"NPT,option
12	Oil pressure differential switch	Connector, option	27	Economizer port	1 1/8", solder
13	Oil cooler connector(out)	3/4"Flare, option	28	Oil level sight glass	
14	Stop pin	option	29	Over flow port	option
15	Oil cooler connector(in)	3/4"Flare, option			

*All stop valves are optional.

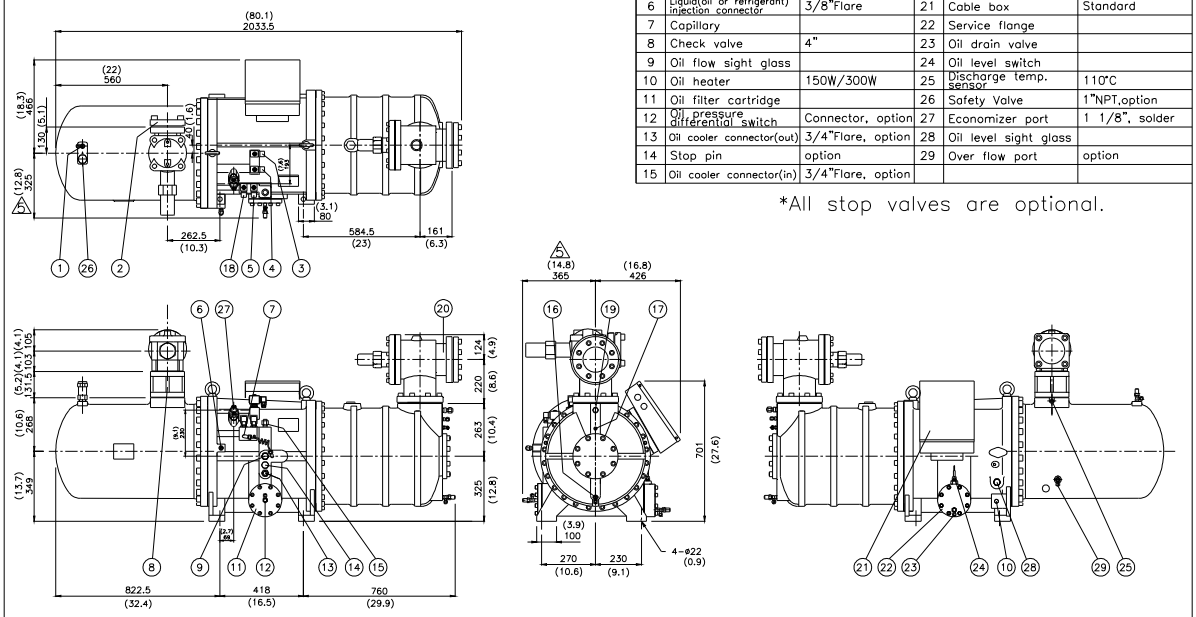

UNIT:
SI: mm Imperial: (in)

Item	Date	Modification
6		
5	2012.11.08	Dimension correction
4	2012.04.19	Delete1.Connector 2.Oil temp. sensor

Model	RC2-790B
Name	Compressor outline
HANBELL	Ver. 05

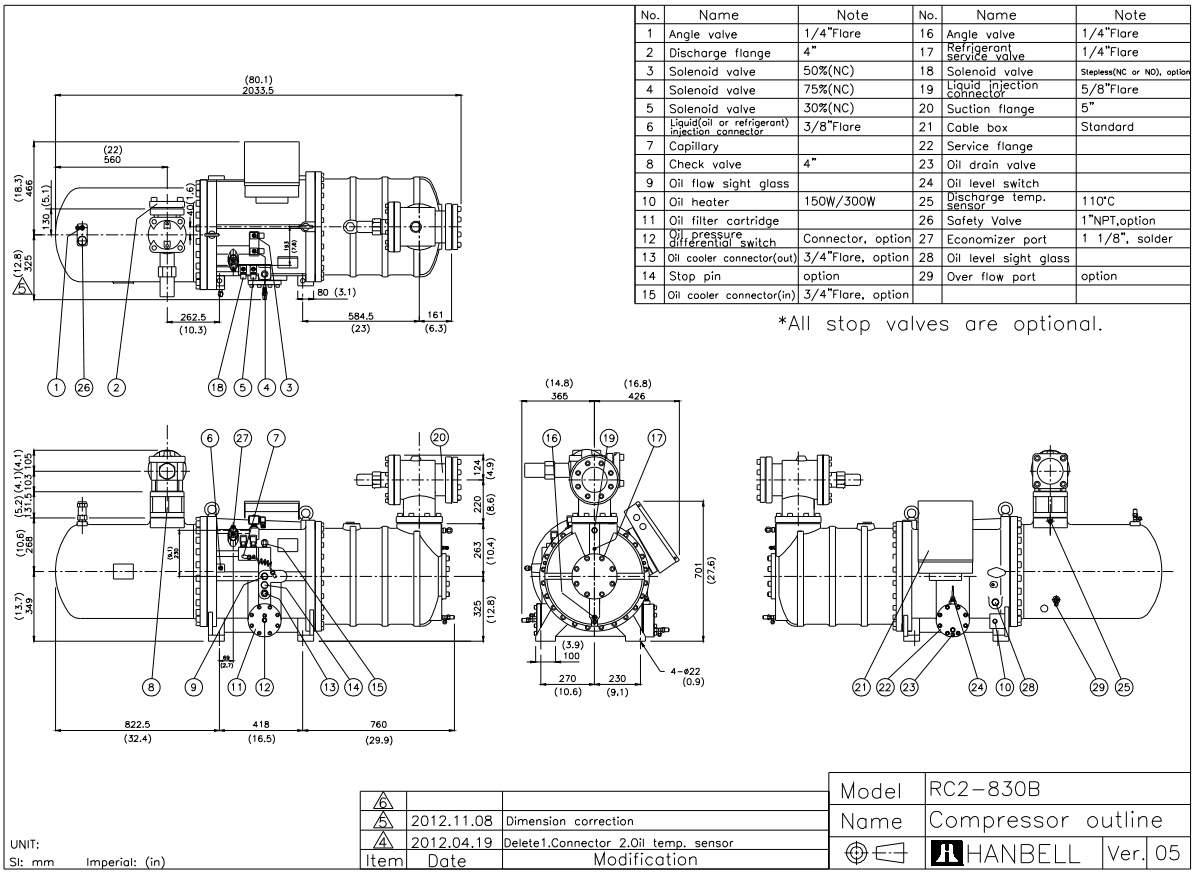

No.	Name	Note	No.	Name	Note
1	Angle valve	1/4"Flare	16	Angle valve	1/4"Flare
2	Discharge flange	4"	17	Refrigerant service valve	1/4"Flare
3	Solenoid valve	50%(NC)	18	Solenoid valve	Stepless(NC or NO), option
4	Solenoid valve	75%(NC)	19	Liquid injection connector	5/8"Flare
5	Solenoid valve	30%(NC)	20	Suction flange	5"
6	Liquid(oil or refrigerant) injection connector	3/8"Flare	21	Cable box	Standard
7	Capillary		22	Service flange	
8	Check valve	4"	23	Oil drain valve	
9	Oil flow sight glass		24	Oil level switch	
10	Oil heater	150W/300W	25	Discharge temp. sensor	110°C
11	Oil filter cartridge		26	Safety Valve	1"NPT,option
12	Oil pressure differential switch	Connector, option	27	Economizer port	1 1/8", solder
13	Oil cooler connector(out)	3/4"Flare, option	28	Oil level sight glass	
14	Stop pin	option	29	Over flow port	option
15	Oil cooler connector(in)	3/4"Flare, option			

*All stop valves are optional.

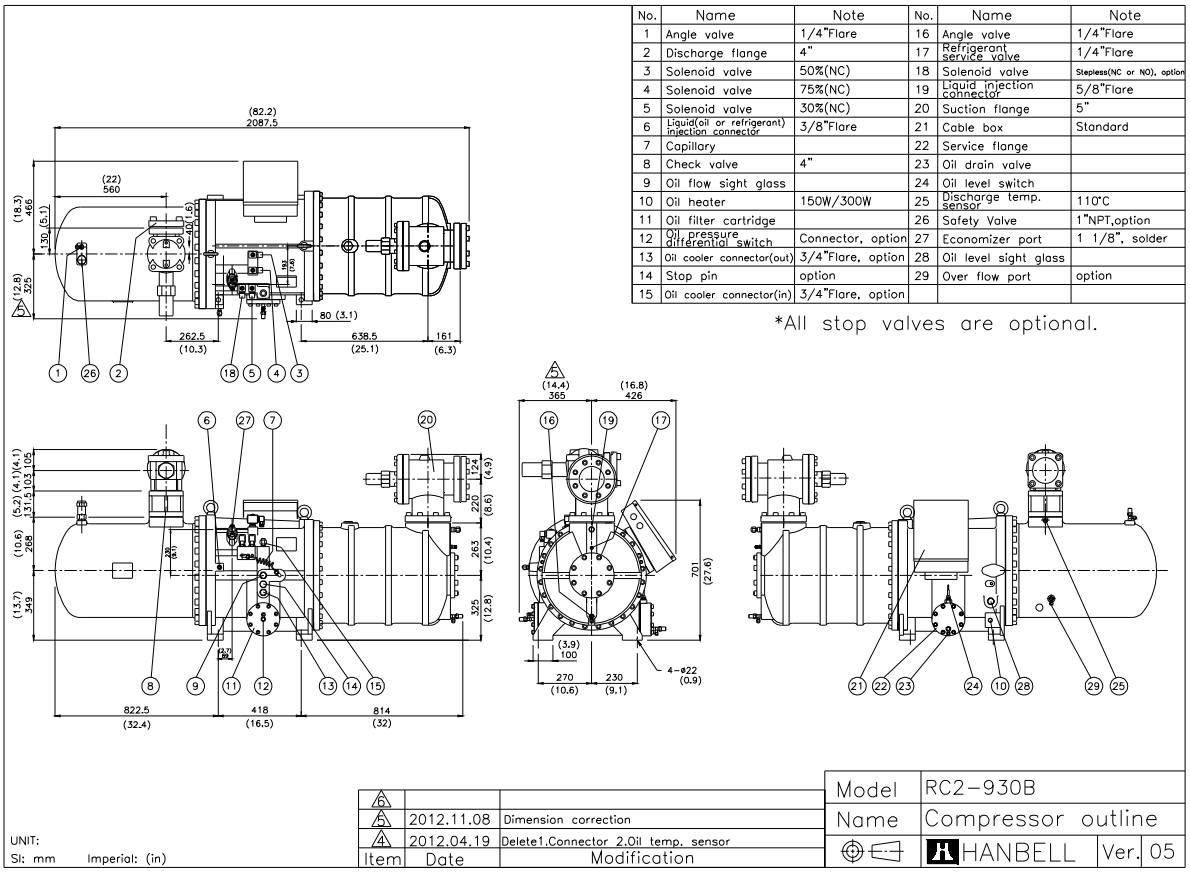

No.	Name	Note	No.	Name	Note
1	Angle valve	1/4"Flare	16	Angle valve	1/4"Flare
2	Discharge flange	4"	17	Refrigerant service valve	1/4"Flare
3	Solenoid valve	50%(NC)	18	Solenoid valve	Stepless(NC or NO), option
4	Solenoid valve	75%(NC)	19	Liquid injection connector	5/8"Flare
5	Solenoid valve	30%(NC)	20	Suction flange	5"
6	Liquid(oil or refrigerant) injection connector	3/8"Flare	21	Cable box	Standard
7	Capillary		22	Service flange	
8	Check valve	4"	23	Oil drain valve	
9	Oil flow sight glass		24	Oil level switch	
10	Oil heater	150W/300W	25	Discharge temp. sensor	110°C
11	Oil filter cartridge		26	Safety Valve	1"NPT,option
12	Oil pressure differential switch	Connector, option	27	Economizer port	1 1/8", solder
13	Oil cooler connector(out)	3/4"Flare, option	28	Oil level sight glass	
14	Stop pin	option	29	Over flow port	option
15	Oil cooler connector(in)	3/4"Flare, option			

*All stop valves are optional.

Note: For RC2-1020B, RC2-1130B, RC2-1270B and RC2-1530B outline drawing, please refer to those of RC2-1020A, RC2-1130A, RC2-1270A, and RC2-1530A

4.4 Compressors accessories

To supply “Total Solution” to customers, Hanbell designs complete standard and optional accessories according to various application requirements for safe and steady running and best performance of compressors

1. Compressors standard and optional accessories

● : Standard, △ : Optional

Model & Accessory	RC2 -																									
	100	140	180	200	230	260	300	310	320	340	370	410	430	470	510	550	580	620	710	790	830	930	1020	1130	1270	1530
Steps or Step-less capacity control system	●	●	●	●	●	●	●	●	●	●	●	●	●	●	●	●	●	●	●	●	●	●	●	●	●	●
Compatible Steps& step-less capacity control system	△	△	△	△	△	△	△	△	△	△	△	△	△	△	△	△	△	△	△	△	△	△	△	△	△	△
Discharge check valve	●	●	●	●	●	●	●	●	●	●	●	●	●	●	●	●	●	●	●	●	●	●	●	●	●	●
Suction & discharge connection bushings	●	●	●	●	●	●	●	●	●	●	●	●	●	●	●	●	●	●	●	●	●	●	●	●	●	●
Suction & discharge stop valves	△	△	△	△	△	△	△	△	△	△	△	△	△	△	△	△	△	△	△	△	△	△	△	△	△	△
PTC temp. sensor	●	●	●	●	●	●	●	●	●	●	●	●	●	●	●	●	●	●	●	●	●	●	●	●	●	●
INT69HBY controller	●	●	●	●	●	●	●	●	●	●	●	●	●	●	●	●	●	●	●	●	●	●	●	●	●	●
IP54 cable box	●	●	●	●	●	●	●	●	●	●	●	●	●	●	●	●	●	●	●	●	●	●	●	●	●	●
150W oil heater	●	●	●	●	●	●	●	●	●	●	●	●	●	●	●	●	●	●	●	●	●	●	●	●	●	●
Oil level switch	△	△	△	△	△	△	△	△	△	△	△	△	△	△	△	△	△	△	△	△	△	△	△	△	△	△
Oil drain valve	△	△	△	△	△	△	△	△	△	△	△	△	△	△	△	△	△	△	△	△	△	△	△	△	△	△
Oil temperature sensor	△	△	△	△	△	△	△	△	△	△	△	△	△	△	△	△	△	△	△	△	△	△	△	△	△	△
Liquid injection system (solenoid valve + expansion valve)	△	△	△	△	△	△	△	△	△	△	△	△	△	△	△	△	△	△	△	△	△	△	△	△	△	△
Liquid injection system (solenoid valve + stop valve)	△	△	△	△	△	△	△	△	△	△	△	△	△	△	△	△	△	△	△	△	△	△	△	△	△	△
Horizontal check valve	△	△	△	△	△	△	△	△	△	△	△	△	△	△	△	△	△	△	△	△	△	△	△	△	△	△
External oil separator	△	△	△	△	△	△	△	△	△	△	△	△	△	△	△	△	△	△	△	△	△	△	△	△	△	△
External oil filter	△	△	△	△	△	△	△	△	△	△	△	△	△	△	△	△	△	△	△	△	△	△	△	△	△	△
Oil flow switch	△	△	△	△	△	△	△	△	△	△	△	△	△	△	△	△	△	△	△	△	△	△	△	△	△	△
Economizer	△	△	△	△	△	△	△	△	△	△	△	△	△	△	△	△	△	△	△	△	△	△	△	△	△	△
Economizer connection muffler	△	△	△	△	△	△	△	△	△	△	△	△	△	△	△	△	△	△	△	△	△	△	△	△	△	△
Oil cooler	△	△	△	△	△	△	△	△	△	△	△	△	△	△	△	△	△	△	△	△	△	△	△	△	△	△
Oil pump	△	△	△	△	△	△	△	△	△	△	△	△	△	△	△	△	△	△	△	△	△	△	△	△	△	△
Oil filter pressure differential switch connector	△	△	△	△	△	△	△	△	△	△	△	△	△	△	△	△	△	△	△	△	△	△	△	△	△	△
Safety valve	△	△	△	△	△	△	△	△	△	△	△	△	△	△	△	△	△	△	△	△	△	△	△	△	△	△
Explosion proof accessories	△	△	△	△	△	△	△	△	△	△	△	△	△	△	△	△	△	△	△	△	△	△	△	△	△	△
Mounting pad	△	△	△	△	△	△	△	△	△	△	△	△	△	△	△	△	△	△	△	△	△	△	△	△	△	△
Lubricant oil	△	△	△	△	△	△	△	△	△	△	△	△	△	△	△	△	△	△	△	△	△	△	△	△	△	△
Micro controller	△	△	△	△	△	△	△	△	△	△	△	△	△	△	△	△	△	△	△	△	△	△	△	△	△	△
Sound jacket	△	△	△	△	△	△	△	△	△	△	△	△	△	△	△	△	△	△	△	△	△	△	△	△	△	△
Temperature sensors Pt100 or Pt1000 – for motor coil temp. monitoring	△	△	△	△	△	△	△	△	△	△	△	△	△	△	△	△	△	△	△	△	△	△	△	△	△	△

Note: The accessory table is just for reference only. Actual specification and accessories enclosed might vary with different quotation and agreement respectively. If any optional accessory is required and out of above mentioned standard accessory, please contact Hanbell for detailed specification and price.

2. Description of accessories

a. Steps or step-less capacity control system
Please refer to chapter 2.6 and 2.7 for the detail of step or step-less capacity control system.

b. Compatible steps and step-less capacity control system
For customers' ease of stock control, possible modification of capacity-control logic in the future, or other special requirements of capacity control, Hanbell deliberately designs devices for stepless/step dual capacity control as nonstandard accessory for customers' choices. Logic of stepless/step dual capacity control is basically identical to those of stepless or step capacity control respectively. Please refer to Chapter 2.6, 2.7, & 2.8 for further details.

c. Suction and discharge check valve
Hanbell standard check valve (vertical type) is gravity-driven with characteristics of large flow volume and low pressure differential. After shut-down of compressor, Teflon taper guider inside can simultaneously seal up the precisely machined base of check valve by gravity force to effectively prevent return of high-pressured gas to compressor. The gravity-driven check valve is equipped vertically. Due to limitation of space or piping requirements, alternative horizontal check valve is also available.

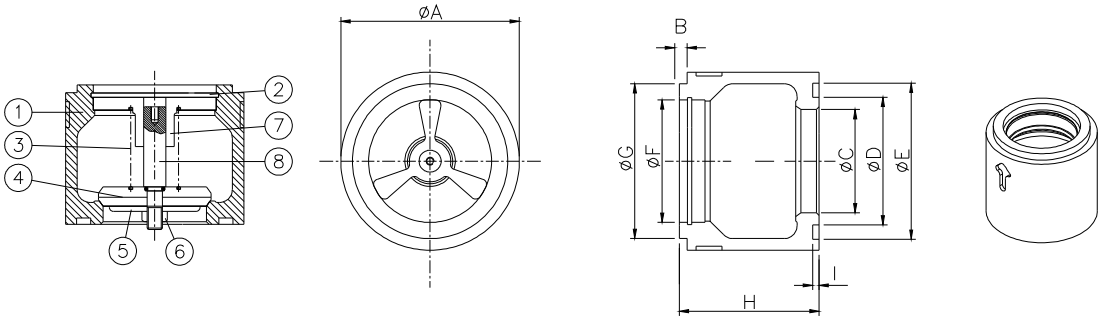

Figure 24 Suction check valve outline drawing (Horizontal type)

Dia.	Dimension						unit: mm		
	A	B	C	D	E	F	G	H	I
2"	102	6	53	69	91	65	90	85	5
2 1/2"	122	6	69	89	111	85	110	97	5
3"	138	6	80	99	121	95	120	108	5
4"	163	6	96	124	146	120	145	123	5

No.	1	2	3	4	5	6	7	8
Item	Body	C clipper	Spring	Valve plate	Gasket	Nut	Guide seat	Shaft

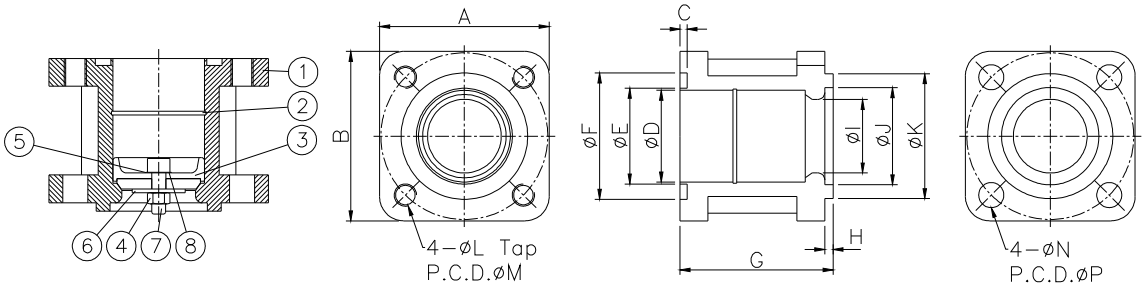

Figure 25 Discharge check valve outline drawing (Vertical type)

Dia.	Dimension														unit: mm
	A	B	C	D	E	F	G	H	I	J	K	L	M	N	P
1 1/2"	109	109	5	55	59	76	105	6	34	60	75	M16x2	105	18	105
2"	122	122	5	65	69	91	110	6	46	70	90	M16x2	120	18	120
2 1/2"	134	134	5	85	89	111	125	6	55	90	110	M16x2	140	18	140
3"	153	153	5	95	99	121	135	6	66	100	120	M20x2.5	160	22	160
4"	171	171	5	120	124	146	135	6	80.5	125	145	M20x2.5	185	22	185

No.	1	2	3	4	5	6	7	8
Item	Body	C clipper	Guide seat	Nut	Valve plate	Gasket	Bolt	Washer

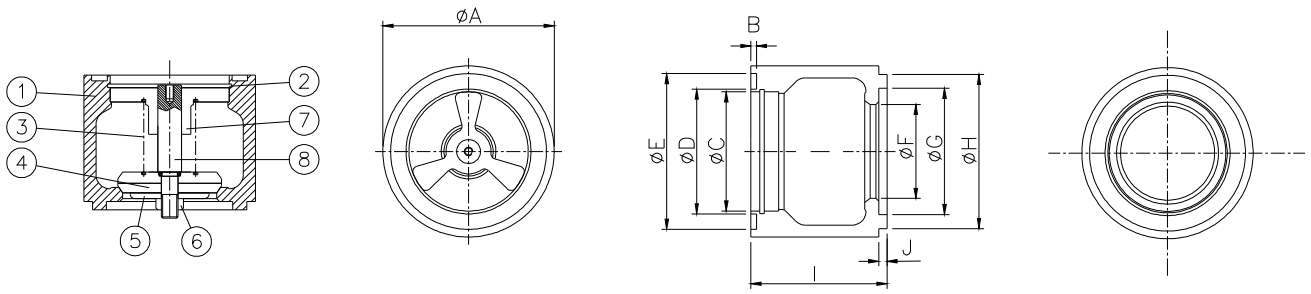

Figure 26 Discharge check valve outline drawing (Horizontal type)

Dia.	Dimension								unit: mm	
	A	B	C	D	E	F	G	H	I	J
1 1/2″	86	4	55	59	76	42	60	75	80.5	6
2”	102	4	65	69	91	53	70	90	85	6
2 1/2″	122	4	85	89	111	67	90	110	97	6
3″	138	4	95	99	121	80	100	120	108	6
4″	163	4	120	124	146	96	125	145	123	6
6”	238	5	190	195	216	146	190	215	160	6

No.	1	2	3	4	5	6	7	8
Item	Body	C clipper	Spring	Valve plate	Gasket	Nut	Guide seat	Shaft

d. Suction and discharge connection bushings

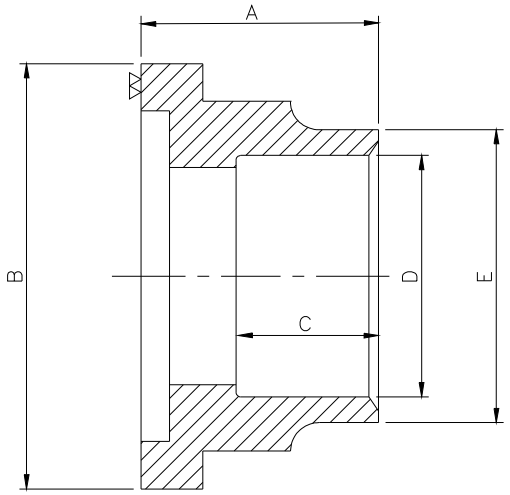

Model	Standard Discharge Flange Bushing		Standard Suction Flange Bushing	
	Steel pipe	Copper pipe	Steel pipe	Copper pipe
RC2-100	1 1/2″	1 5/8”	2″	2 1/8”
RC2-140	1 1/2″	1 5/8”	2″	2 1/8”
RC2-180	1 1/2″	1 5/8”	2 1/2″	2 5/8”
RC2-200	1 1/2″	1 5/8”	2 1/2″	2 5/8”
RC2-230	2 ″	2 1/8”	3″	3 1/8”
RC2-260	2 ″	2 1/8”	3″	3 1/8”
RC2-300	2 ″	2 1/8”	3″	3 1/8”
RC2-310	2 ″	2 1/8”	3″	3 1/8”
RC2-320	2 ″	2 1/8”	3″	3 1/8”
RC2-340	2 1/2″	2 5/8”	4″	4 1/8”
RC2-370	2 1/2″	2 5/8”	4″	4 1/8”
RC2-410	2 1/2″	2 5/8”	4″	4 1/8”
RC2-430	2 1/2″	2 5/8”	4″	4 1/8”
RC2-470	2 1/2″	2 5/8”	4″	4 1/8”
RC2-510	3″	3 1/8”	4″	4 1/8”
RC2-550	3″	3 1/8”	4″	4 1/8”
RC2-580	3″	3 1/8”	4″	4 1/8”
RC2-620	3″	3 1/8”	5″	5 1/8”
RC2-710	4″	4 1/8”	5″	5 1/8”
RC2-790	4″	4 1/8”	5″	5 1/8”
RC2-830	4″	4 1/8”	5″	5 1/8”
RC2-930	4″	4 1/8”	5″	5 1/8”
RC2-1020	4”	4 1/8”	6”	
RC2-1130	4”	4 1/8”	6”	
RC2-1270	5”		8”	
RC2-1530	5”		8”	

Figure 27 Flange bushing dimensions

Note: The above table lists specification of standard bushing for every model of Hanbell compressors. Their dimensions correspond to flange bushing dimensions and the table below. If bushing dimensions are not indicated in purchasing order, Hanbell will provide standard type. Suitable piping of customers’ choice is also shown in the table below. If non-standard bushing is needed, please double-check with Hanbell sales representatives when placing order for compressors.

Specification and dimension of optional flange bushing

Model	Discharge / Suction port	Materials and Sizes of pipes		Dimension of flanges bushing				
				A	B	C	D	E
RC2-100 RC2-140	Discharge	Copper	1 5/8"	52	75	35	41.6	52
			2 1/8"				54.3	65
		Steel	1 1/2"				49.3	64
	Suction	Copper	1 5/8"	50	90	30	41.6	55
			2 1/8"				54.3	65
			2 5/8"				67	74
		Steel	2"				61.3	74
RC2-180 RC2-200	Discharge	Copper	15/8"	52	75	35	41.6	52
			2 1/8"				54.3	65
		Steel	1 1/2"				49.3	64
	Suction	Copper	2 1/8"	60	110	35	54.3	65
			2 5/8"				67	77
			3 1/8"				79.8	90
		Steel	2 1/2"				77.2	90
RC2-230 RC2-260 RC2-300 RC2-310 RC2-320	Discharge	Copper	1 5/8"	50	90	30	41.6	55
			2 1/8"				54.3	65
			2 5/8"				67	74
		Steel	2"				61.3	74
	Suction	Copper	2 1/8"	66	120	45	54.3	65
			2 5/8"				67	77
			3 1/8"				79.8	90
		Steel	2 1/2"				77.2	92
			3				90.2	103
RC2-340 RC2-370 RC2-410 RC2-430 RC2-470	Discharge	Copper	2 1/8"	60	110	35	54.3	65
			2 5/8"				67	77
			3 1/8"				79.8	90
		Steel	2 1/2"				77.2	90
	Suction	Copper	3 1/8"	76	145	50	79.8	90
			3 5/8"				92.4	103
			4 1/8"				105.1	116
		Steel	3"				90.2	105
			3 1/2"				102.8	117
			4"				115.6	128
RC2-510 RC2-550 RC2-580	Discharge	Copper	2 1/8"	66	120	45	54.3	65
			2 5/8"				67	77
			3 1/8"				79.8	90
		Steel	2 1/2"				77.2	92
			3"				90.2	103
	Suction	Copper	3 1/8"	76	145	50	79.8	90
			3 5/8"				92.4	103
			4 1/8"				105.1	116
		Steel	3"				90.2	105
			3 1/2"				102.8	117
			4"				115.6	128
RC2-620	Discharge	Copper	2 1/8"	66	120	45	54.3	65
			2 5/8"				67	77
			3 1/8"				79.8	90
		Steel	2 1/2"				77.2	92
			3"				90.2	103
	Suction	Copper	4 1/8"	80	174	35	105.1	121.2
			5 1/8"	75			130.5	146.5
		Steel	5"	75			141.3	154
RC2-710 RC2-790 RC2-830 RC2-930	Discharge	Copper	3 1/8"	76	145	50	79.8	90
			3 5/8"				92.4	103
			4 1/8"				105.1	116
		Steel	3"				90.2	105
			3 1/2"				102.8	117
			4"				115.6	128
	Suction	Copper	4 1/8"	80	174	35	105.1	121.2
			5 1/8"	75			130.5	146.5
		Steel	5"	75			141.3	154
RC2-1020 RC2-1130	Discharge	Copper	3 1/8"	76	145	50	79.8	90
			3 5/8"				92.4	103
			4 1/8"				105.1	116
		Steel	3"				90.2	105
			3 1/2"				102.8	117
			4"				115.6	128
	Suction	Steel	6"	75	215	40	166.7	196
RC2-1270 RC2-1530	Discharge	Steel	5"	75	174	35	141.3	154
	Suction	Steel	8"		260	40	218	241

e. Suction and discharge stop valves

For maintenance and service of compressor, it is recommended to install the suction and discharge stop valves. Please refer to following detail of Hanbell stop valves.

Model	Stop Valve Size		Model	Stop Valve Size	
	Discharge	Suction		Discharge	Suction
RC2-100	1 1/2″	2″	RC2-470	2 1/2″	4″
RC2-140	1 1/2″	2″	RC2-510	3″	4″
RC2-180	1 1/2″	2 1/2″	RC2-550	3″	4″
RC2-200	1 1/2″	2 1/2″	RC2-580	3″	4″
RC2-230	2″	3″	RC2-620	3″	5″
RC2-260	2″	3″	RC2-710	4″	5″
RC2-300	2″	3″	RC2-790	4″	5″
RC2-310	2″	3″	RC2-830	4″	5″
RC2-320	2″	3″	RC2-930	4″	5″
RC2-340	2 1/2″	4″	RC2-1020	4″	6″
RC2-370	2 1/2″	4″	RC2-1130	4″	6″
RC2-410	2 1/2″	4″	RC2-1270	5″	8″
RC2-430	2 1/2″	4″	RC2-1530	5″	8″

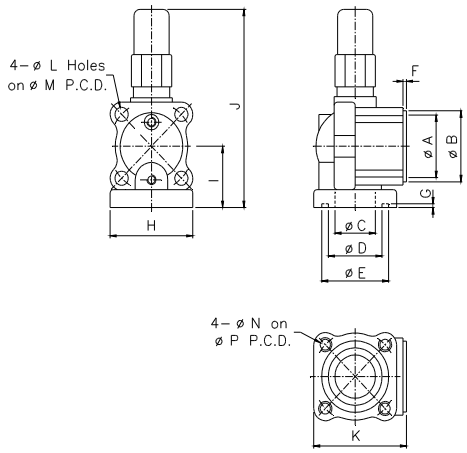

Figure 28 Dimension of stop valve

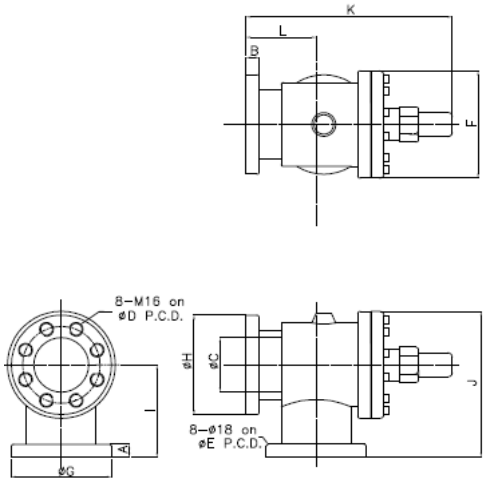

Figure 29 5” Suction stop valve

Dia.	Dimensions unit: mm														
	A	B	C	D	E	F	G	H	I	J	K	L	M	N	P
1 1/2″	60	75	36	59	76	6	5	106	75	256	115	18	105	M16x2	105
2”	70	90	60	69	91	6	5	122	86	280	128	18	120	M16x2	120
2 1/2″	90	110	67	89	111	6	5	137	95	307	153	18	140	M16x2	140
3″	100	120	80	99	121	6	5	154	117	398	177	22	160	M20x2.5	160
4″	125	145	105	124	146	6	5	171	130	445	201	22	185	M20x2.5	185

Dia.	Dimensions unit: mm											
	A	B	C	D	E	F	G	H	I	J	K	L
5″	30	30	126	194	194	248	230	230	214	338	474	161

* Specification of stop valve

Maximum working pressure	Hydrostatic pressure test	Refrigerant	Temperature range
28 kg / cm² G	42 kg / cm² G	HFC, HCFC, R717	–40˚C~150˚C

f. INT69HBY control module and PTC temperature sensor

In order to protect compressor, each RC2 series compressor has been installed three PTC temperature sensors inside motor coil and another one at the discharge side of compressor. These sensors are connected to an INT69HBY control module to monitor the motor and discharge temperature. If the temperature in one of the positions monitored exceeds the nominal response temperature of the respective PTC thermistor, the sensor resistance increases and the INT69HBY control module output relay trips. The module resets when the temperature drops below the response temperature by approx. 5K. The output replay provides a potential-free change-over contact and is energized as long as the nominal response temperature is not exceeded.

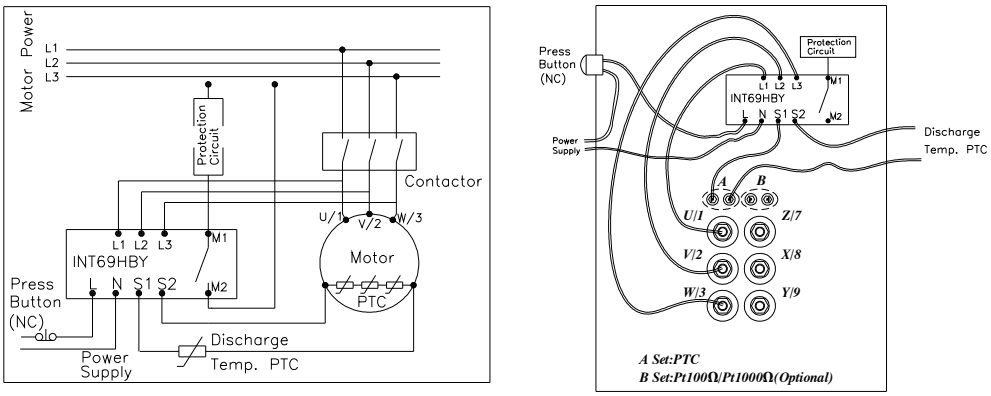

Figure 30 INT69HBY & PTC connection diagram

Other major functional descriptions are as follow:

1. After the supply voltage has been connected, a three second initialization period follows. Provide the PTC chain resistance is below the reset threshold (2.75kΩ), the relay trips after these 3 seconds have expired.
2. 1 to 9 PTC thermistors with different nominal response temperature may be connected serially to the PTC input.
3. If any thermistor resistance increases above trip level the relay drops out. This failure results in a lockout. (5 minutes delay for 1st PTC failure, 60 minutes delay for 2nd failure, lockout for 3rd failure.)
4. If a rapid temperature increase is detected (locked rotor condition), the output relay drops out. This failure results in a lockout.
5. The phase monitoring of the three phase motor voltage becomes active 1 second after motor has started, for duration of 10 seconds. In case of a wrong phase sequence or a phase failure, the relay switches of and locks.
6. The Lock-out and delay time may be lifted by cycling the power off for approx. 5 seconds.
7. To avoid nuisance tripping due to reverse running after shutdown (pressure equalization), the phase monitoring function is only re-enabled approx. 20 seconds after motor stop.
8. A dual LED (red / green) provides additional information about the motor protector and compressor status.
9. The relay is fed out as a N/O dry contact, which is closed under good conditions.
10. Sensor and supply circuits are galvanic isolated.
11. The motor protector is not suitable for application of frequency converters.

Technical data:

●Supply voltage
AC 50/60 Hz 115/120V-15 …+10% 3VA
AC 50/60 Hz 230/240V-15…+10% 3VA

●Ambient temperature
-30 … +70 ℃

●Relay output
max. AC 240V, max. 2.5A, C300
min. ＞ 24V AC/DC, >20 mA

●Phase monitor
3 AC, 50/60Hz, 200 ~ 575 V ± 10%

Blink code display& diagram:

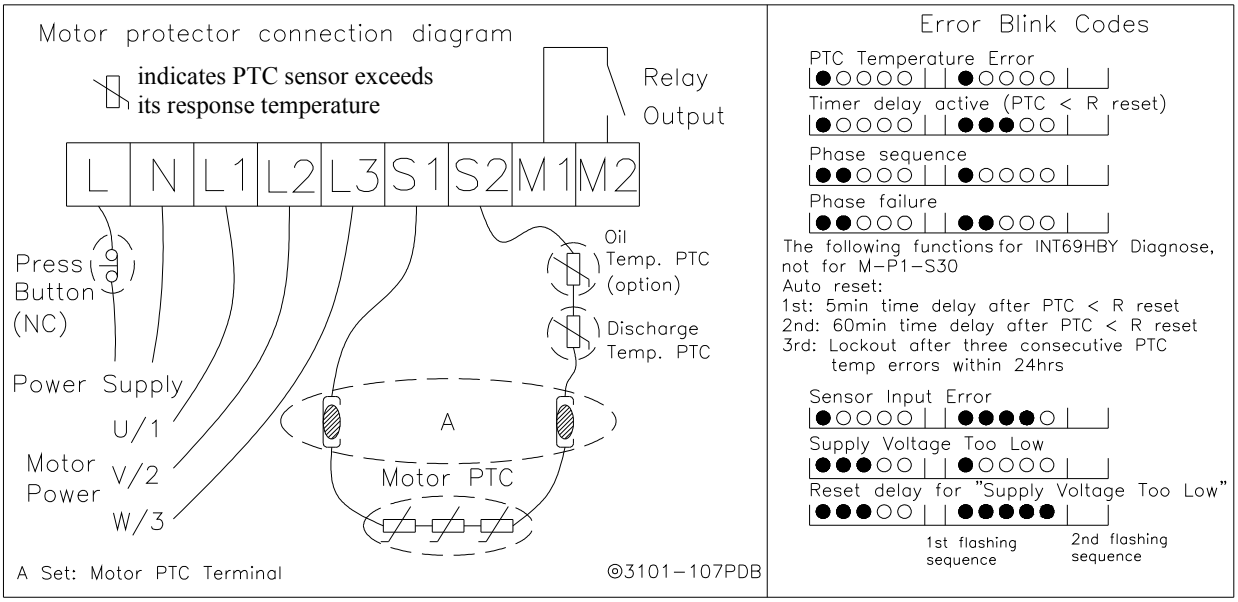

g.150W oil heater

An UL approved 150W oil heater has been installed in every compressor as a standard accessory.

Before restart of compressor after shutdown for a long time, please turn on oil heater at least 8 hours to make the temperature inside compressor higher than system temperature and ambient temperature and then it can prevent condensation of refrigerant inside oil sump of compressor which may result in liquid compression in next start and poor lubrication due to too low viscosity of lubricant oil. In addition, Hanbell also offers 300W oil heater to keep adequate lubricant oil temperature for large external oil separator and applications in areas with low ambient temperature.

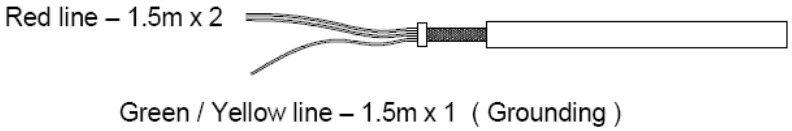

Figure 31 150W oil heater

Specification： 150W, 300W; 110V or 220V; IP 54; UL approval

Note: If compressor is installed in low ambient temperature, it is recommended to insulate oil separator against cold ambience.

h. Oil level switch

There are 2 wires for the interlock to main control circuit or any micro controller's independent circuit. To prevent from oil level switch trip caused by oil foaming or surging in the sump, a time delay around 10 ~ 15 seconds is recommended before shut down the compressor.

Max. contact capacity = 50W/SPST
Surge current = 0.5A
Max. voltage = 200V DC/ 240V AC
Max. current = 1A

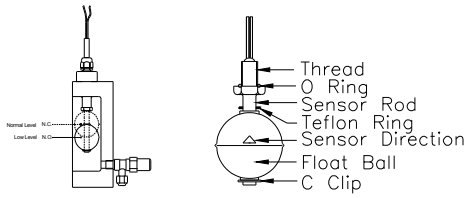

Figure 32 Oil level switch

Note:

1. On the float ball there is a triangle mark which tells you its sensor direction. Therefore, before you install an oil level switch on a compressor or an external oil separator, please use the triangle mark as your reference before install any oil level switch on the compressor or external oil separator.
2. Please check this triangle mark and modify the oil level switch if needed.
3. If you have any other question, don't hesitate to contact with Hanbell representatives for help.
4. The illustration below show you the outside appearance of our oil level switch

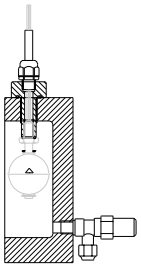

Figure 33 Oil level switch on a compressor

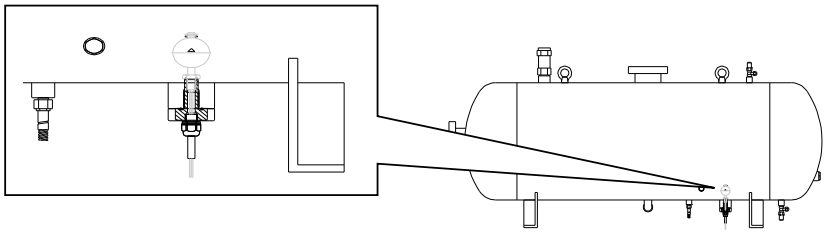

Figure 34 Oil level switch on an external oil separator

i. Oil drain valve

Oil drain valve is installed in compressor to drain out oil for maintenance.

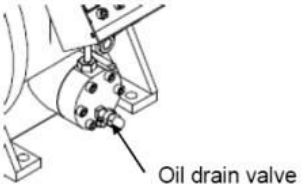

Figure 35 Oil drain valve

j.IP54 cable box

Hanbell designs and makes the cable box which meets IP54 protection degree.
Dimensions of cable box and the size of opening in cable box (for motor power line and control power line) refer to the drawing below

①RC2-100, RC2-140, RC2-180 cable box (Figure 36)

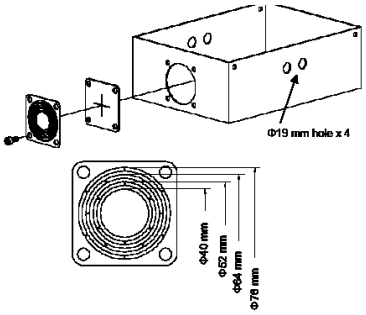

② RC2-200, RC2-230, RC2-260, RC2-300, RC2-310, RC2-320, RC2-340, RC2-370, RC2-410, RC2-430, RC2-470, RC2-510, RC2-550, RC2-580, RC2-620 cable box (Figure 37)

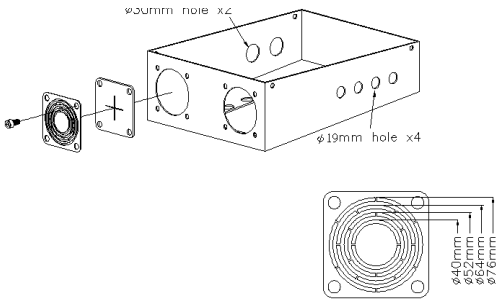

③RC2-710, RC2-790, RC2-830, RC2-930 cable box (Figure 38)

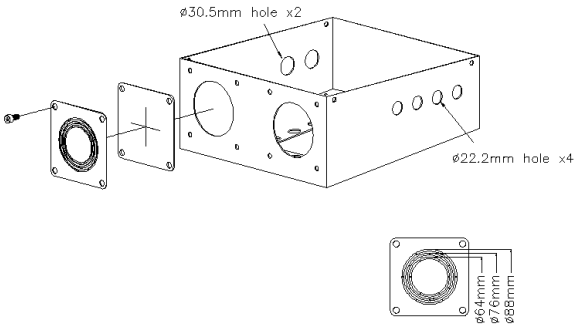

④RC2-1020, RC1130, RC1270, RC2-1530 cable box (Figure 39)

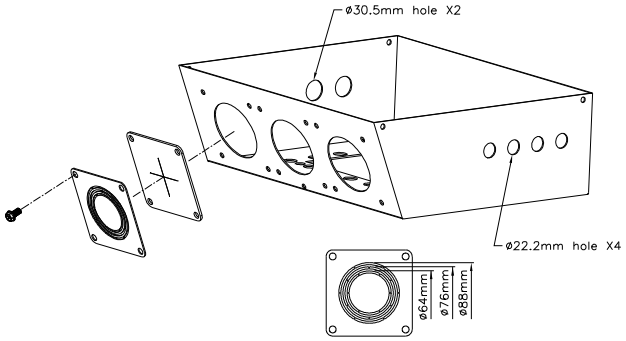

k. Liquid injection system (solenoid valve + expansion valve)

In high-condensing-temperature or low-evaporating-temperature applications liquid injection system is recommended to cool motor coil auxiliary. In high-compression-ratio applications, liquid injection system to compression chamber is also recommended to cool down high compression heat due to high compression ratio to maintain normal discharge temperature. Please refer to Chapter 7 for detailed introduction of additional cooling.

Hanbell provides the following liquid injection expansion valves and solenoid valves for customers' options. Please refer to capacity recommended in selection program to choose appropriate liquid injection expansion valves.

Brand	Model	Low Temp. Type	High Temp. Type
SPORLAN	Y1037-FV-3-180,3/8"SAE		○
	Y1037-FV-5-180,3/8"SAE		○
ALCO	TCLE-3HW-6A	○	
	TCLE-5HW-6A	○	
	TCLE-10HW-6A	○	
FUJIKOKI	JBE-E60HFKT-1		○

l. Liquid injection system (solenoid valve + stop valve)

This simple liquid injection system adjusts amount of liquid injection by stop valve, suitable for application with level load and ambient temperature but it's not recommended. Opening ratio of stop valve could not vary with system loading and change of temperature. Therefore, frequent check of discharge temperature can prevent damage of compressor due to over cooling or insufficient cooling.

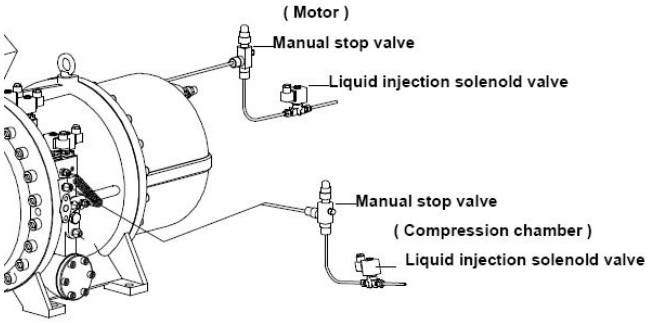

Figure 40 Liquid injection – solenoid valve + stop valve

m. Horizontal check valve installation

Horizontal check valve is standard accessory of RC2-F Series compressor. Considering limitation of clearance for installation, horizontal check valve would be alternative to aforementioned vertical check valve for RC2 Series compressor. Please refer to section C. for dimension of horizontal check valve. The installation drawing is as below:

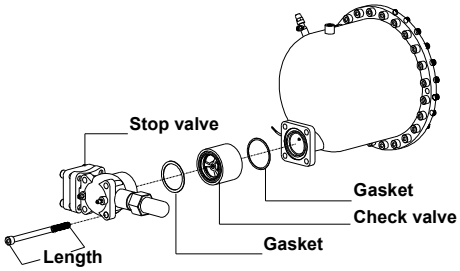

Figure 41 Dimensions and installation of horizontal check valve

n. External oil separator

For improvement of oil return in flooded-type, low-temperature and parallel systems, and system with long piping, Hanbell specially designs a complete series of external oil separators – OS series with characteristics of high filtration efficiency and low pressure drop. The following table shows details of OS series:

Note : It is recommended to install a buffer before the external oil separator to avoid noise and vibration which caused by resonance.

(Ⅰ) Technical data：

Model	Type	Oil Volume (Liter)		Range of application based on Displacement (m^3/hr) (Recommended)	Shell Diameter
		High level	Low level		
OS40	Vertical	17	9	205	14”
OS50	Vertical	22	12	206~270	16”
OS65	Vertical	31	18	271~440	18”
OS80	Horizontal	33	20	441~705	20”
OS100	Horizontal	40	27	706~1120	20”
OS125	Horizontal	50	30	1121~1310	24”
OS150	Horizontal	60	36	1311~1835	24”

(Ⅱ) Accessories：

No.	Description	OS40	OS50	OS65	OS80	OS100	OS125	OS150
1	Refrigerant inlet	1 1/2”	2”	2 1/2”	3”	4”	5”	6”
2	Refrigerant outlet	1 1/2”	2”	2 1/2”	3”	4”	5”	6”
3	Oil outlet	5/8” Flare	5/8” Flare	5/8” Flare	1” PF	1” PF	1 1/4” PF	1 1/4” PF
4	Oil charge valve	1/4” Flare						
5	High oil S.G.	1 PCS						
6	Low oil S.G.	1 PCS						
7	Oil level switch	1 PCS						
8	Oil heater	150W	150W	150W	150W	150W	300W	300W
9	Oil drain valve	1/4” Flare						
10	Oil temp. protection (option)	1/8” NPTF						
11	Safety valve (option)	1/2”	1/2”	1/2”	1”	1”	1 1/2”	1 1/2”

(Ⅲ) Dimensions：

No.	OS40	OS50	OS65	OS80	OS100	OS125	OS150
A	930	1050	1110	1297	1637	1829	2229
B	505	585	595	650	1000	1080	1480
C	240	275	300	359	354	409	409
D	300	350	350	300	300	400	400
E	18	22	22	23	23	23	23
F	320	360	360	688	698	830	830

(Ⅳ) Drawing：

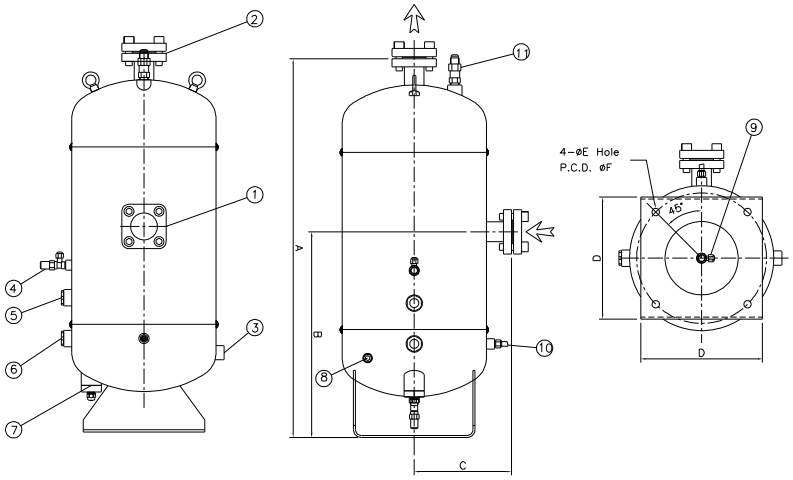

Vertical -OS40, OS50, OS65 (Figure 42)

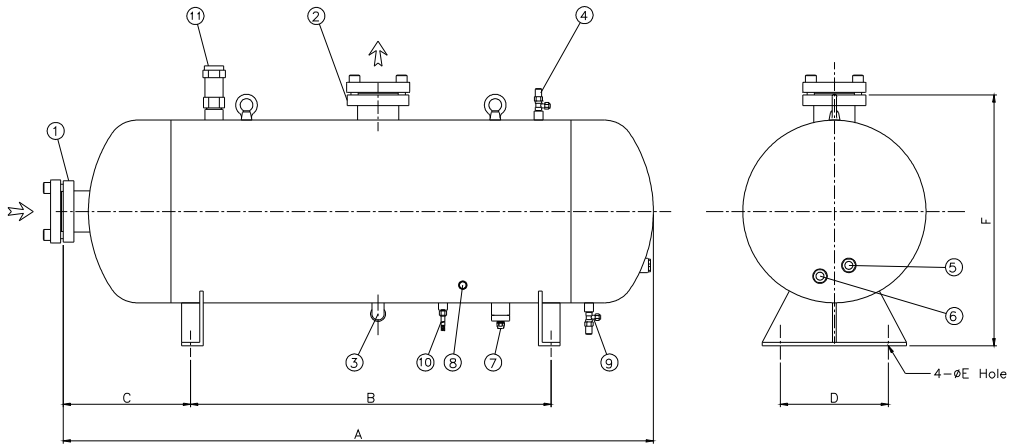

Horizontal OS80, OS100, OS125, OS150 (Figure 43)

o. External oil filter

External oil filter is optional accessory of external oil separator. It is suggested to install external oil filter in oil return line before oil inlet port of compressor for safe running of compressor.

Specification:

*Flow Rate: max 50 (l/m)		*Weight:1.4KG/Set	
*Working Pressure: 40 bar		(the weight is not including element)	
*Material: Aluminum alloy		*Operating Temp.: from -25℃to 110℃	
*Seal: VITON			
Compressor Model	Material Code	Inlet Size	Outlet Size
RC2-100/140/180/200 230/260/300/310/320/340 /410/430/470/510	3130-3240AA	5/8”	5/8”
RC2-550/580/620/710/790 /830/930/1020/1130/1270/ 1530	3131-3240AA	3/4”	3/4”

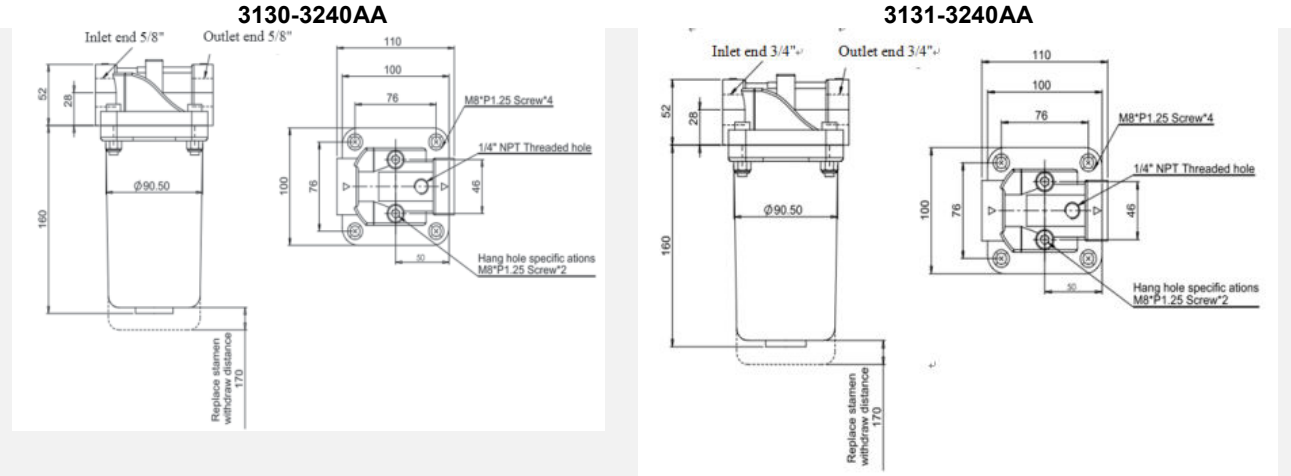

Figure 44 External oil filter

p. Oil flow switch

Oil flow switch operates with external oil separator to prevent oil deficient compressor. Specification and installation of oil flow switch are shown as below:

	G	Type	PN bar	Qmax. Recom. l/min	switch value l/min selectable range for fixed switch	L mm	H mm	SW mm	X mm	Weight kg
bronze	G 1/2	FF-015GR012	200	20	0.4-12	68	79	29	13	0.6
	G 3/4	FF-020GR025	25	40	0.6-25	73	79	32	11	0.7
	G 1	FF-025GR040	25	60	1.5-40	87	90	41	14	1

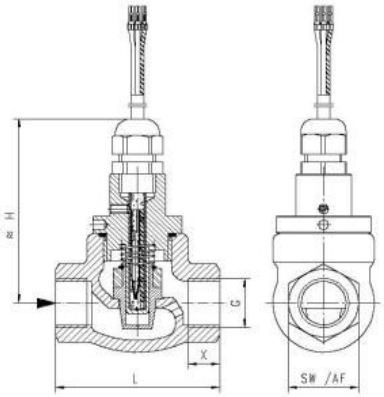

Figure 45 Outline of oil flow switch

(1)Tolerance: ±0.3l/min
(2)Media temperature: max 110 ℃
(3)Average pressure loss: 0.4 bar at Qmax
(4)Hysteresis:depending on switch value minimum 0.4 l/min
Note: Switch value is indicated for horizontally decreasing flow

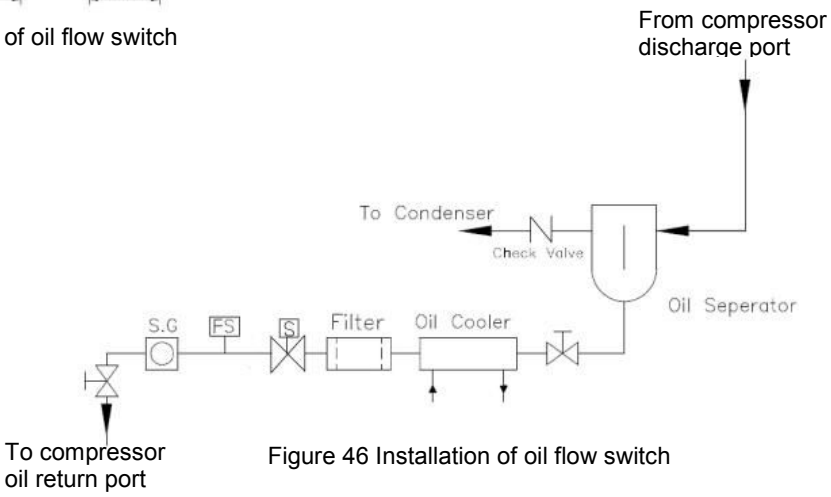

Figure 46 Installation of oil flow switch

q. Economizer connection muffler

When economizer is used, it is recommended to install a muffler and check valve before middle-pressure returned gas port in compression chamber to effectively mitigate pulsation noise in middle pressure as shown in the drawing below:

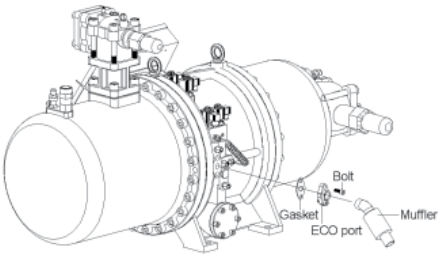

Figure 47 Installation of ECO muffler

r. Mounting pad

To avoid extra vibration and noise resulted from direct contact between compressor footings and the base on which compressor is mounted, it is recommended to add mounting pads in between as the drawing below shown.

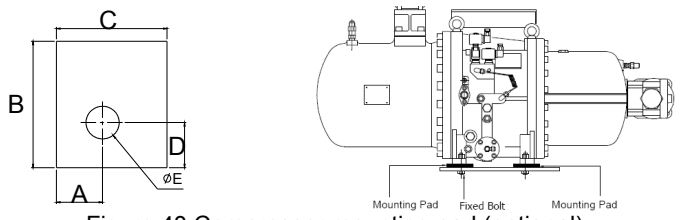

Figure 48 Compressor mounting pad (optional)

Model	Part No.	A	B	C	D	E	Thickness	Req. Q'ty
RC2-100, RC2-140, RC2-180, RC2-200, RC2-230, RC2-260, RC2-300, RC2-310, RC2-320	3131-9815B	20	55	50	20	22	20 mm	4
RC2-340, RC2-370, RC2-410, RC2-430, RC2-470, RC2-510, RC2-550, RC2-580	3136-9815B	26	100	70	25	22	20 mm	4
RC2-620, RC2-710, RC2-790, RC2-830, RC2-930	3139-9815B	25	100	80	25	22	20 mm	4
RC2-1020, RC2-1130, RC2-1270, RC2-1530	3142-9815B	40	100	80	40	22	20 mm	4

s. Temperature sensors Pt100 or Pt1000

RC2 models utilize suction return gas to cool down the motor coil. To effectively detect temperature of motor coil and adequately adjust volume of liquid injection by measured temperature, Hanbell specially mounts Pt100 or Pt1000 sensor on motor coil as an optional accessory. This temperature sensor along with controller of the system monitor motor coil temperature and then control on/off of liquid injection valve accordingly to provide suitable liquid injection as shown in the diagram below.

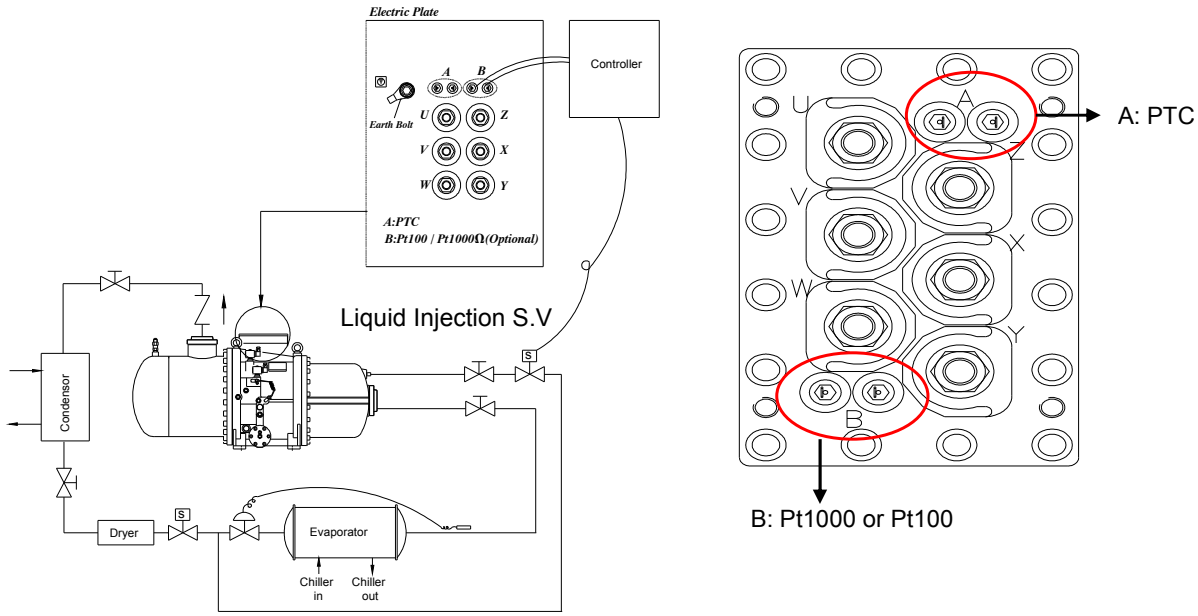

Figure 49 Liquid injection connection diagram

1. Note: Hanbell suggests to control temperature of motor coil at 60℃ (not higher than 60℃)
2. On the terminal cover plates, “A” is PTC sensor, and “B” is Pt1000 or Pt100 temperature sensor.
3. The terminal cover plates for models RC2-710B, RC2-790B, RC2-830B, RC2-930A, RC2-930B are shown above. The PTC sensor is on the top right side and Pt1000 or Pt100 is on the left bottom side of terminal cover plate.

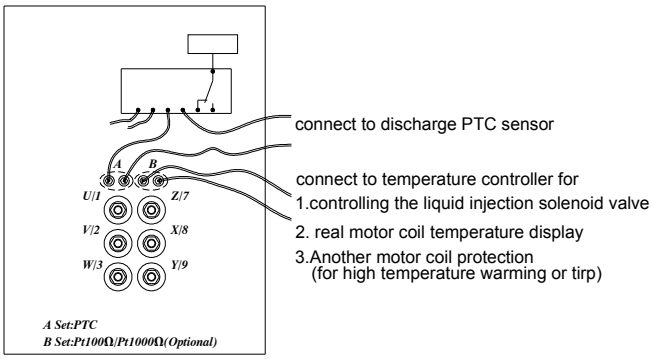

Figure 50 Connection diagram of Pt100/Pt1000 sensor

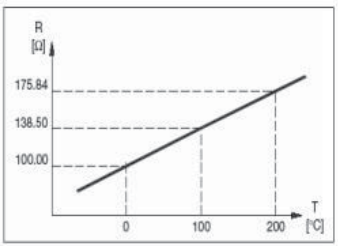

Figure 51 Pt100 sensor

Specification : Pt100 sensor

- Recommended max. meas. Current for heat coefficient <0.1K - DC 1 ~ 3 mA
- Heating coefficient - 10mΩ/K
- Sensor resistance at 0℃ - 100Ω±0.12Ω
- Change of resistance 0 ~ 100℃ - 0.385Ω/K
- Insulation test voltage U is – AC 1.5kV

Specification : Pt1000 sensor

- Recommended max. meas. Current for heat coefficient < 0.1K – DC0.2 ~ 2mA
- Sensor resistance at 0℃ - 1000Ω±1.20Ω
- Change of resistance 0 ~ 100℃ - 3.85Ω/K
- Insulation test voltage U is – AC 1.5kV

Note: Please specify Pt100 or Pt1000 sensor when placing orders to Hanbell.

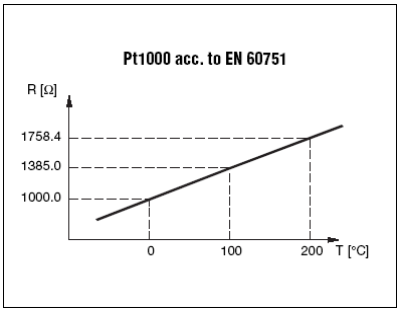

Figure 52 Pt1000 sensor

t. Minimum pressure valve(MPV)

Minimum pressure valve is useful in cold start condition. During the cold start period, because the system's condensing temperature is still low, the discharge pressure will stay at a quite low level which means the pressure differential between discharge and suction side will not be enough for compressor to act normally. Under such working condition, compressor might have difficulties to load itself. Oil supply to bearings and internal cooling might be not enough which will cause severe damage to those moving parts in the end. With minimum pressure valve, the pressure differential can be built shortly after the start up, so the capacity control and oil supply to those moving parts won't be a problem. Therefore, the compressor protection can be achieved. In addition to protection function, it can also act as check valve to reduce the reverse running time after compressor's stopping.

Flange on minimum pressure valves are provided for the ease of installation. It can be installed on either compressor's discharge port or external oil separator's discharge port (F type compressor only). The installation and specification are shown as below:

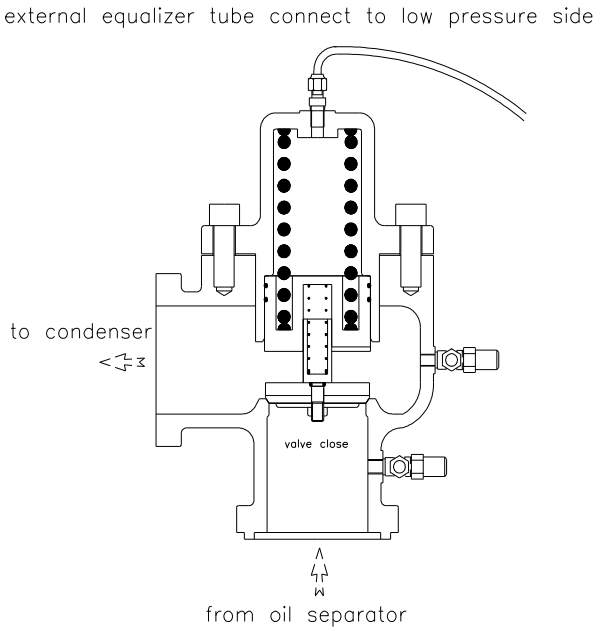

Figure 53 Installation of MPV

Model	Opening pressure	Max. pressure	Working temperature	Pressure drop
1 1/2"	3.6±0.3Bar	28Bar	<120℃	<0.1Bar
2"				
2 1/2 "				
3"				
4"				
5"				
6"				

Please consult Hanbell representatives for the detailed outline and application

4.5 Installation and connection of compressor

The diagrams below show the installation and connection of compressors

a. RC2-100 , RC2-140 , RC2-180

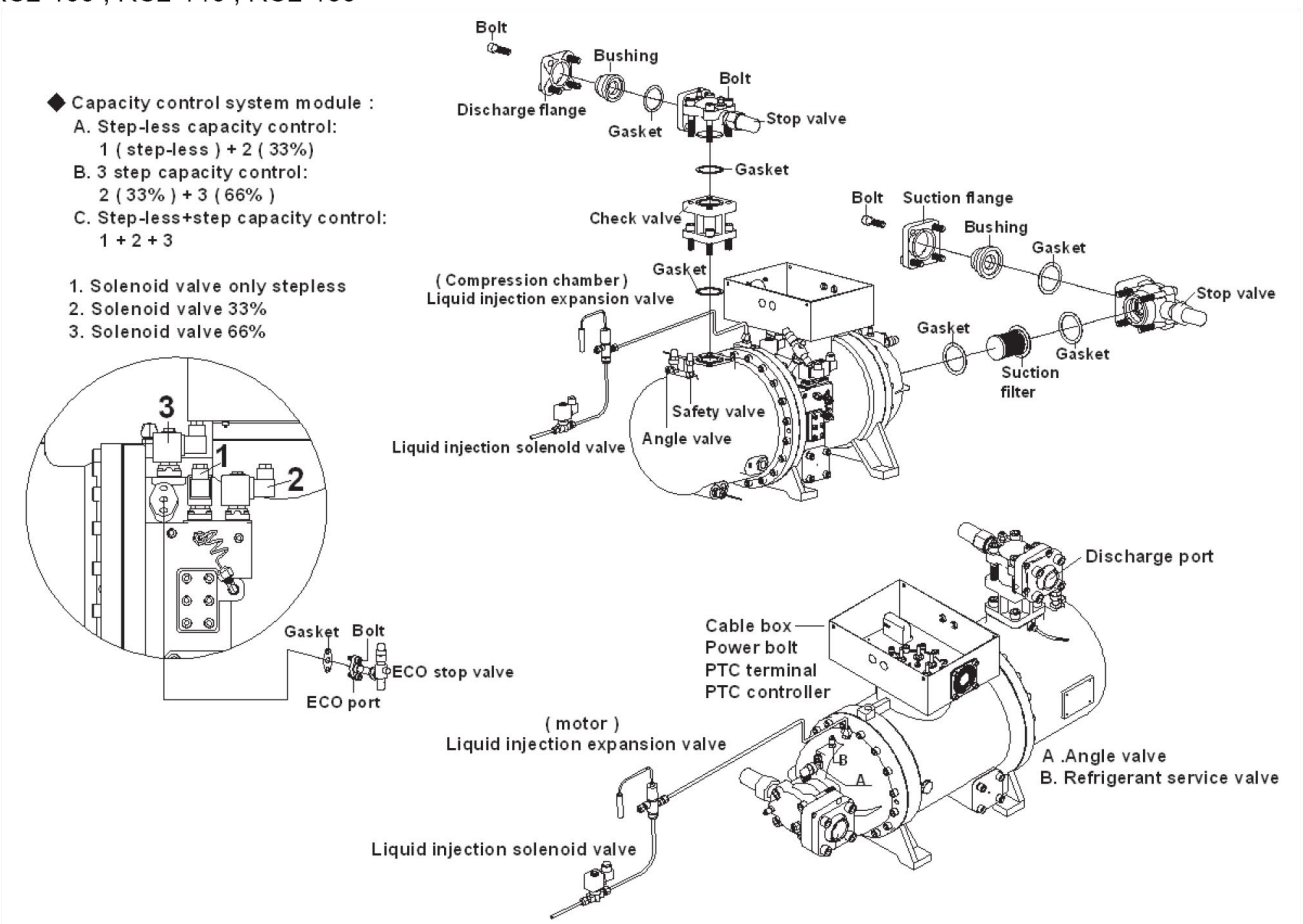

b. RC2-200, RC2-230, RC2-260, RC2-300, RC2-310, RC2-320, RC2-340, RC2-370, RC2-410, RC2-430, RC2-470, RC2-510, RC2-550, RC2-580, RC2-620

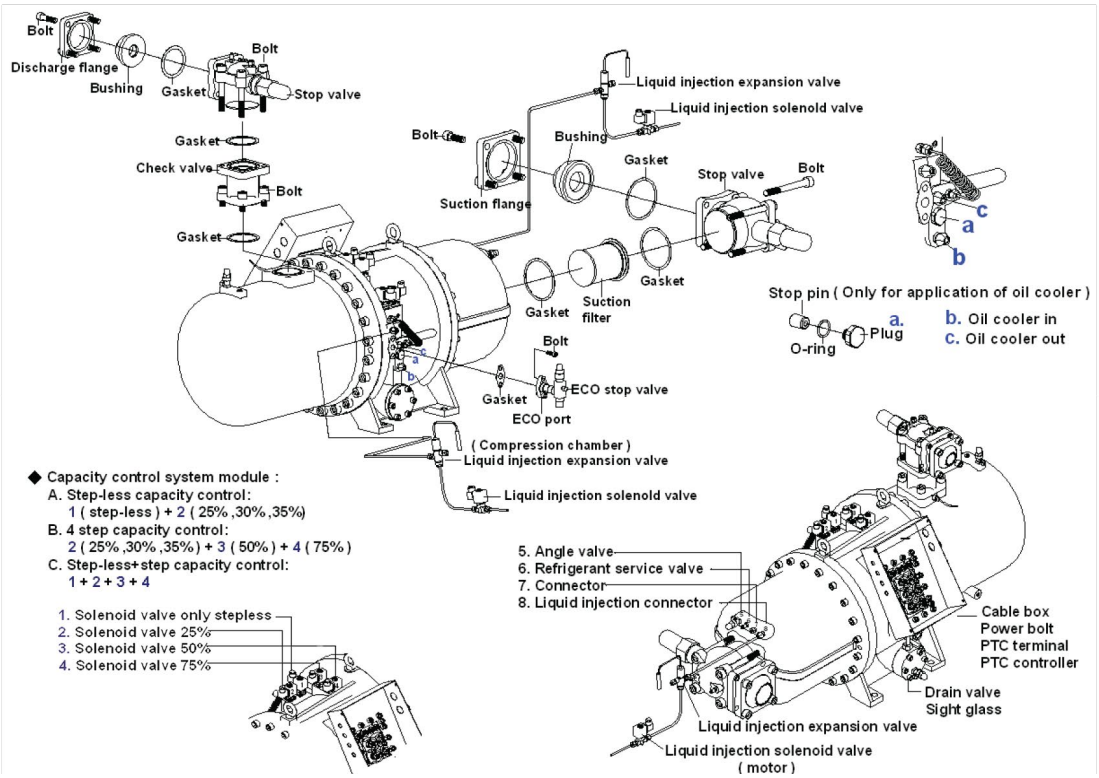

c. RC2-710, RC2-790, RC2-830, RC2-930

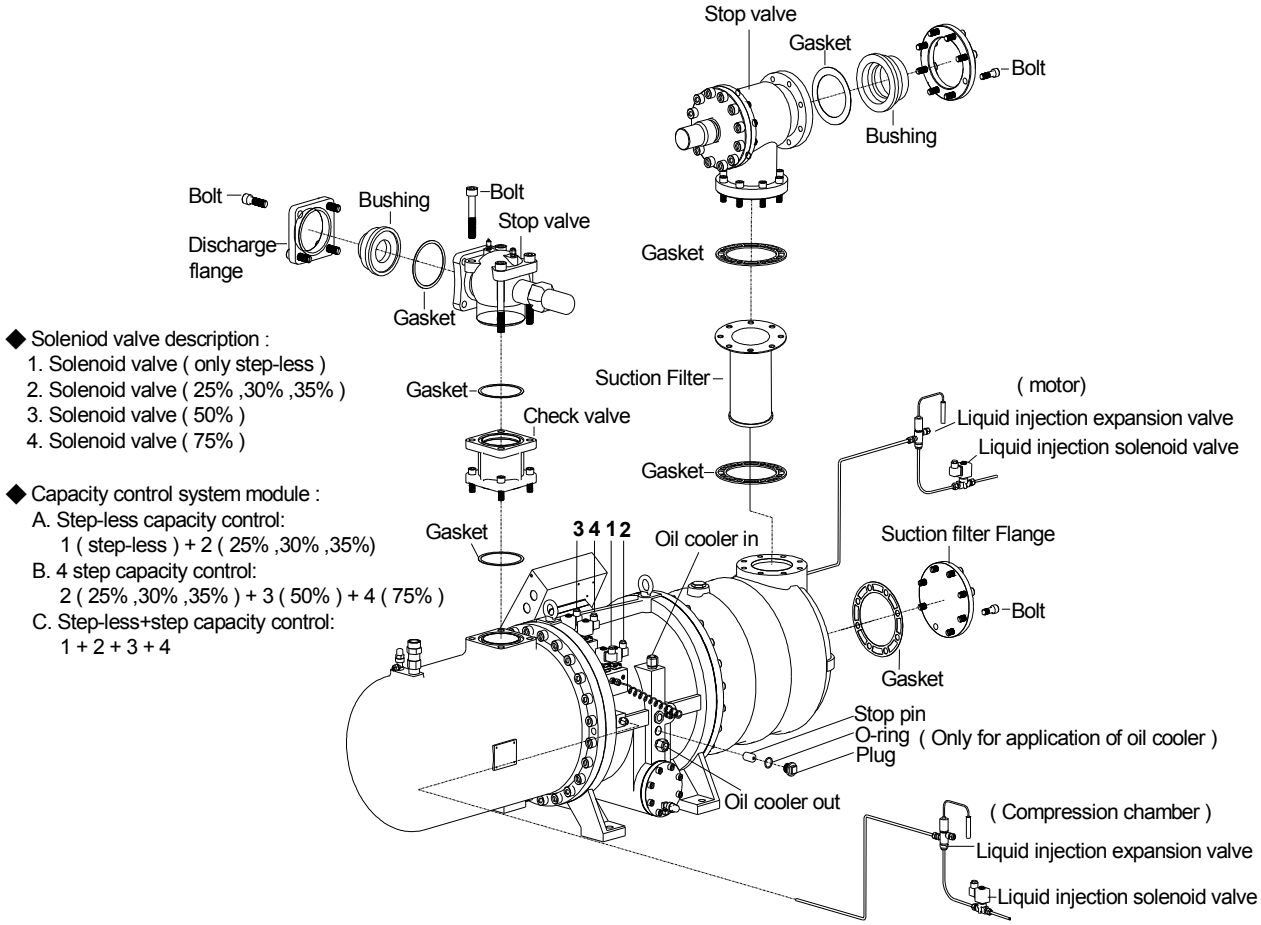

◆ Soleniod valve description :
1. Solenoid valve (only step-less)
2. Solenoid valve (25% ,30% ,35%)
3. Solenoid valve (50%)
4. Solenoid valve (75%)

◆ Capacity control system module :
A. Step-less capacity control:
1 (step-less) + 2 (25% ,30% ,35%)
B. 4 step capacity control:
2 (25% ,30% ,35%) + 3 (50%) + 4 (75%)
C. Step-less+step capacity control:
1 + 2 + 3 + 4

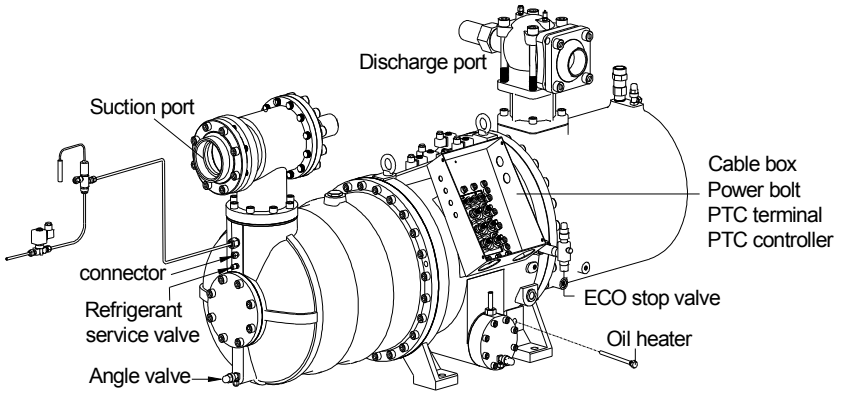

d. RC2-1020, RC2-1130, RC2-1270, RC2-1530

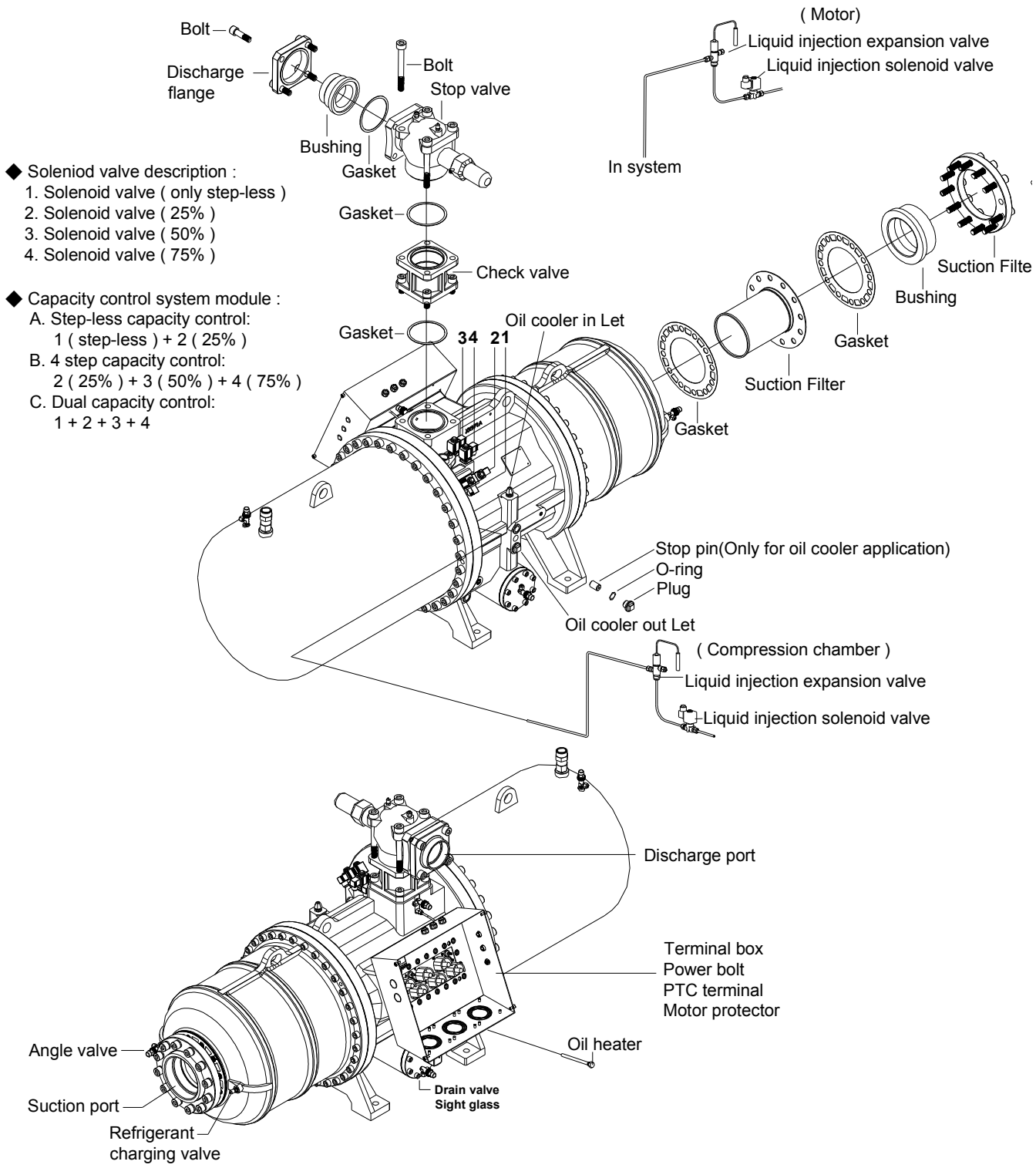

◆ Soleniod valve description :
1. Solenoid valve (only step-less)
2. Solenoid valve (25%)
3. Solenoid valve (50%)
4. Solenoid valve (75%)

◆ Capacity control system module :
A. Step-less capacity control:
1 (step-less) + 2 (25%)
B. 4 step capacity control:
2 (25%) + 3 (50%) + 4 (75%)
C. Dual capacity control:
1 + 2 + 3 + 4

5. Electrical data and design

5.1 Motor design

HANBELL RC2 series screw compressors are fitted with Y-Δ motor as standard. But Δ/ΔΔ motor (Part Winding Starting – PWS) is also available for model RC2-100A ~ RC2-580A & RC2-100B ~ RC2-580B.

i.e. ●RC2-100A ~ RC2-580A & RC2-100B ~ RC2-580B both Y-Δ motor and Δ/ΔΔ motor are available.

●RC2-620A ~ RC2-1530A & RC2-620B ~ RC2-1530B only Y-Δ motor are available.

Y-Δ Starting

Y-Δ motor connects motor coil by Y connection during starting therefore reducing voltage on coils to 1/√3 of input voltage and reconnects motor coil by △ connection after starting. By doing so, we can decrease starting current thorough voltage drop, i.e., so-called voltage-drop starting.

Y-Δ motor connection method is shown in the following motor wiring diagram:

In Y connection, MCM, MCS are inductive while motor leads Z,X,Y are tied together as a neutral connecting as Y fashion. A few seconds later (3~5 sec is recommended), MCM, MCS become deductive. Around 0.25 sec later, MCM,MCD are inductive, it turns out △ run connection.

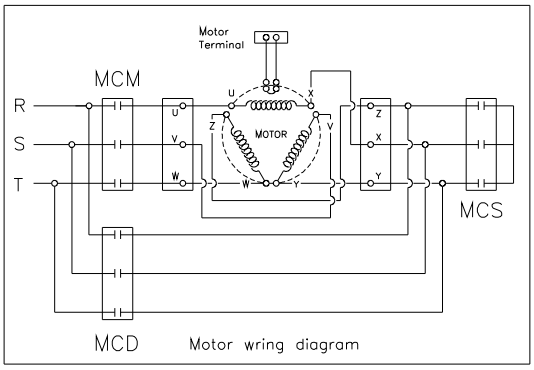

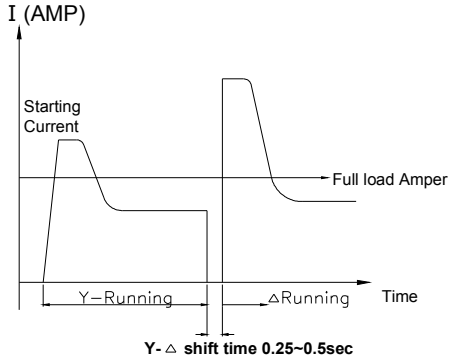

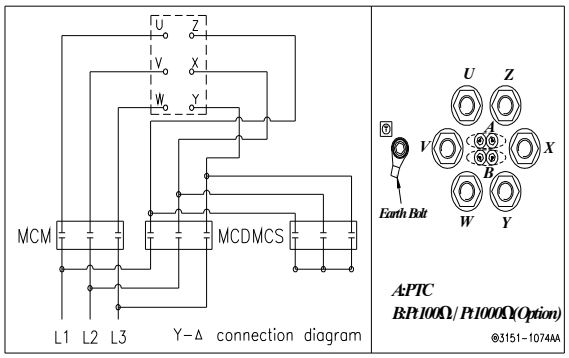

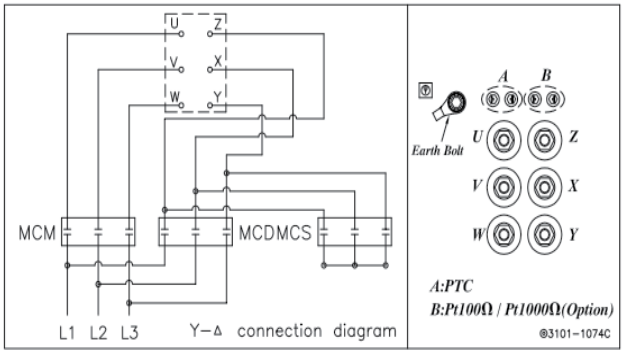

Figure 54 Y-Δ Starting diagram

Attention! : After Y start, MCM & MCS are deductive for 0.25 sec and then MCM & MCD are inductive for Δ run. Within as transient as 0.25 sec, pseudo short circuit might occur due to inappropriate action of contactors, causing trip of compressors. When it occurs, we recommend usage of adjustable Y-Δ dedicated timer or slightly lengthen span of time for MCM, MCS deduction - MCM, MCD re-induction from 0.25 sec to 0.5 sec max directly in micro controller or PLC program. Please refer to Y-Δ shift time diagram for details. Because motor is not powered during Y-Δ shift, shorter Y-Δ shift span is suggested to prevent second start due to decreased rotation speed. However, if Y-Δ shift span is too short, aforementioned pseudo short circuit might occur.

Characteristics of Y-Δ Starting

1. Starting current in Y connection is 1/3 of lock rotor ampere.
2. Starting torque in Y connection is 1/3 of lock rotor torque.
3. Acceleration of motor rotor becomes smaller at full-load starting, therefore compressors require starting at partial load.

Δ/ΔΔ (PW) starting

RC2-100A ~ RC2-580A & RC2-100B ~ RC2-580B are available to be fitted with PWS motor for customer's application as an optional accessory. Please refer to the follow diagram for the wiring of PWS motor.

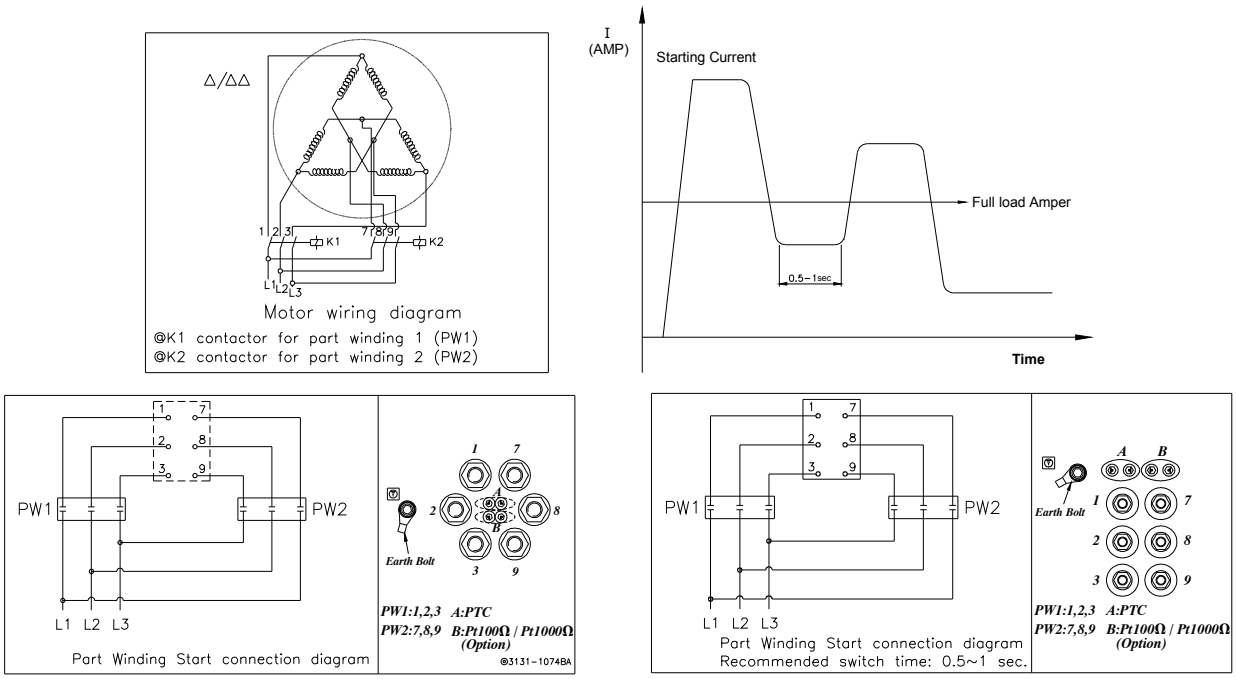

Figure 55 Δ/ΔΔ (PW) starting diagram

The selection of both of the motor contactors (k1 / k2) is each for approx. 60% of the max. running current. The recommended time delay of the switching relay k1 is to be set at 0.5 second and not more than 1 second.

PWS Starting features

The starting current is around 40% ~ 70% of full-winding Locked Rotor Current. It depends on the design and motor size, and low starting torque.

Direct on line features

The starting equipment consists of only a main contactor and thermal or electronic overload relay. During a direct-on-line start, the starting torque is very high, and is higher than necessary for most applications. The disadvantage with this method is that it gives the highest possible starting current. Please refer to the follow diagram for the wiring of DOL starting

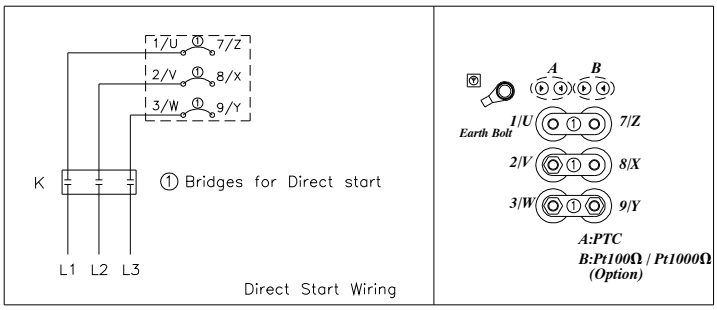

Figure 56 DOL starting diagram

Soft starting features

A soft starter is different from other starting methods in characteristics. It has thyristors in the main circuit, and the motor voltage is regulated with a printed circuit board. The soft starter's advantage is that when the motor voltage is low during start, the starting current and starting torque is also low. Please refer to the following diagram for wiring of soft starting.

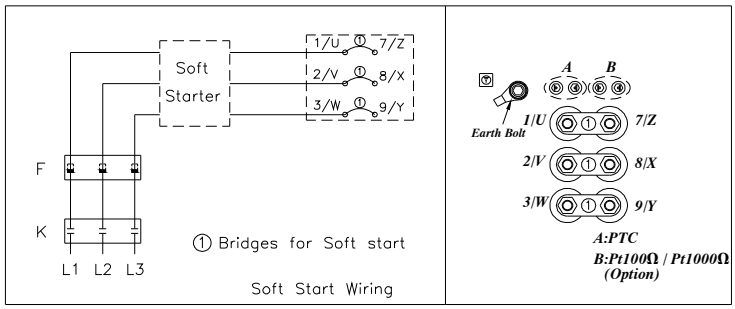

Figure 57 Soft starting diagram

Besides Y-Δ and PWS start, if there were any inquiry of direct on line start、soft start、inverter start or series reactance reduced voltage start, please contact Hanbell for further information.

Power supply wiring application (RC2-1270 and 1530 only)

To assure that power supply wiring to starter panel is properly installed and connected, please review and follow the guidelines:

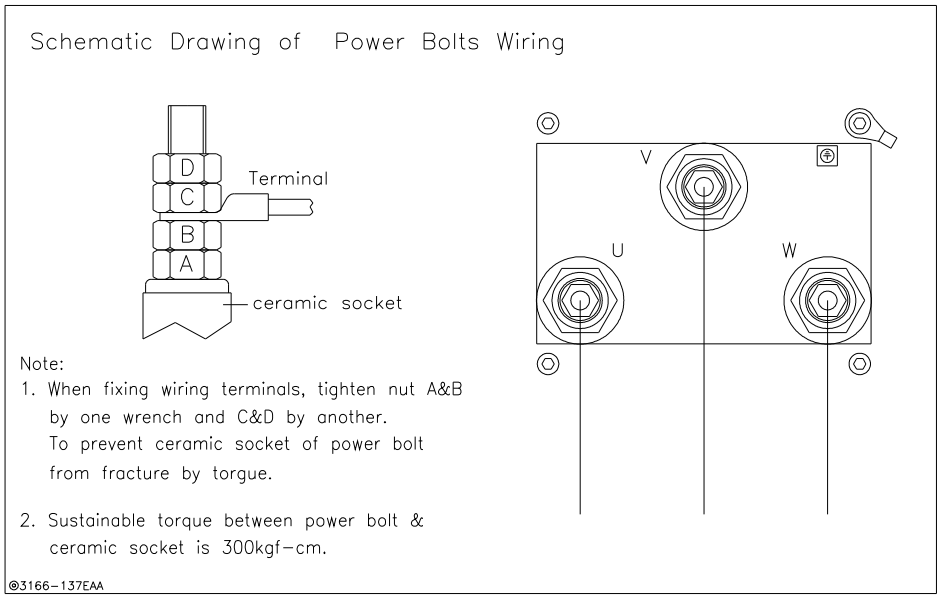

Figure 26: Power bolt connection

a. Power source application
   (1) Verify that nameplate ratings are compatible with the power supply of the system.
   (2) Use copper conductors to connect the power supply.
   (3) Size the power supply wiring of the compressor: maximum current in required operating condition x 1.25 (25% safety factor).
   (4) Make sure that incoming power wiring is properly phased; each power supply conduit connects to each conductor in correct sequence to ensure equal phase representation as number 1-2-3 in order.
   (5) Use flexible conduit to enhance serviceability and minimize transmission of vibration.
   (6) Size the circuit breaker or fuse according to NEC or local guidelines.
   (7) As install the power supply conduit, make sure that its position does not interfere with any compressor components, or with other equipments.
b. Accessories for connection between the starter and the motor
   (1) Grounding wire terminal lugs are provided inside the motor terminal box.
   (2) Terminal clamps are supplied with motor terminals to accommodate standard motor wire terminal lugs.
c. Wire terminal lugs
   (1) Use adequate size wire terminal lugs for the application.
   (2) Carefully choose the size of wire lugs for compatibility with the conductor sizes specified by the electrical engineer
   (3) Use copper washers on power bolt connections.
   (4) Tighten each bolt to 300kgf-cm
   (5) These connections should be completed under supervision of a qualified engineer in compliance with NEC or local guidelines

Caution: Ensure the power supply wiring and output motor wiring are connected to the correct terminals. Any mistake could cause catastrophic failure to compressor motor.

5.2 Compressor protection devices

The table below shows the list of protection devices which are essential to protect the compressor and operate safely. Follow the protection devices listed in the below table to ensure the compressor running under normal condition.

Protection device	Set point	Remark
Motor wiring temperature protector (PTC sensor)	Cutout 110℃, cut in 100℃ ※	Standard
Discharge temperature protector (PTC sensor)	Cutout 110℃, cut in 100℃ ※	Standard
Phase reversal protector (INT69HBY)		Standard
Phase failure protector (INT69HBY)		Standard
Oil temperature sensor	Cutout 100℃, cut in 90℃ (Air-cooled, heat pump, or refrigeration system) Cutout 80℃, cut in 70℃ (Water-cooled or flooded system)	Optional
Oil level switch	Time delay setting: 10~15 seconds	Optional
Oil filter pressure differential switch	Cutout 1.5 kg/cm^{2}g	Optional
Oil pressure differential switch	Oil inlet pressure should be 4 kg/cm^{2}g higher than the suction pressure. When it is not 4kg/cm^{2}g higher than the suction pressure, it is necessary to add a minimum pressure valve or an oil pump to ensure proper oil supply	Optional
Oil flow switch	Time delay setting: 10~15 seconds	Optional
Pt100 or Pt1000 for liquid injection to motor chamber.	Depends on customer's application. Suggest Cut in 60℃, cut out 50℃	Optional

※Manual reset suggested

Motor thermistors and discharge thermistors are temperature sensors with quick response while the temperature approach to their set point; thermistors must be connected in series to a controller (INT69HBY) in terminal box as a guardian to protect compressor. Alarm lamp for this protector is required to be embedded on control panel as indicator. Any intention to short controllers for starting of compressors is prohibited. It is beyond Hanbell's warranty of compressors if there is any action above mentioned found.

Note: when any protection device trips, please do troubleshooting and reset manually. Do not let the compressor reset automatically after abnormal trip!

5.3 Power supply

1. Limitation of power supply

a. Voltage limitation
Long-term running: rated voltage ±5%
Instant running: rated voltage ±10%

b. Frequency :
Rated frequency ±2%

Note: In the region where the electricity power is unstable, install an additional hi-low voltage protector with ± 5% tolerance of normal voltage to ensure safe operating of the compressor.

2. Unbalanced voltages :

Unbalanced voltages usually occur because of variations in the load. When the load on one or more of the phases are different from the other(s), unbalanced voltages will appear. This can be due to different impedances, or type and value of loading in each phase. Unbalanced voltages can cause serious problems, particularly to the motor.
NEMA defines voltage unbalance as follows:

$$\text{Percent voltage unbalance} = 100 \times \frac{\text{(maximum voltage deviation from average voltage)}}{\text{(average voltage)}}$$

NEMA states that poly-phase motors shall operate successfully under running conditions at rated load when voltage unbalance at the motor terminals does not exceed 1%. Furthermore, operation of a motor with over 5% unbalance is not recommended for it probably results in motor damage.

Unbalanced voltages at motor terminals cause phase current unbalance ranging from 6 to 10 times the percent of voltage unbalance for a fully loaded motor. This causes motor over current resulting in excessive heat that shortens motor life, and hence, eventual motor burnout. If the voltage unbalance is great enough, the reduced torque capability might not be adequate for the application and the motor will not attain rated speed.
Some of the more common causes of unbalance voltages are :

- ●Unbalanced incoming utility supply
- ●Open delta connected transformer banks
- ●Large single phase distribution transformer in the system
- ●Open phase on the primary 3-phase transformer in the distribution system
- ●Blow fuse on 3 phase bank of power factor improvement capacitors
- ●Unequal impedance in conductors of power supply wiring
- ●Unbalanced distribution of single phase loads such as lighting
- ●Unequal transformer tap settings

●Faults or grounds in power transformer
●Heavy reactive single phase loads such as welders

A 3-phase unbalanced voltages protector is upon request as optional accessory. Please contact Hanbell for more details.

5.4 Grounding

There's a grounding terminal inside cable box. Please accurately connect it to grounding of control panel for the system.

Suggestion:

a. The regular setting of electric leak protection should be greater than 50mA; for a humid location, 25mA is better.
b. Grounding voltage of casing should be no greater than 50V; for a humid location, the limit is 25V.
c. Grounding resistance should be no greater than 500 Ohm.
d. Air cut board (ACB) is regularly equipped with electric leak protection. Please refer to related settings for its normal action.
e. If electric leak protection is active, please check if insulation of equipments is normal and if its wiring and setting are correct.

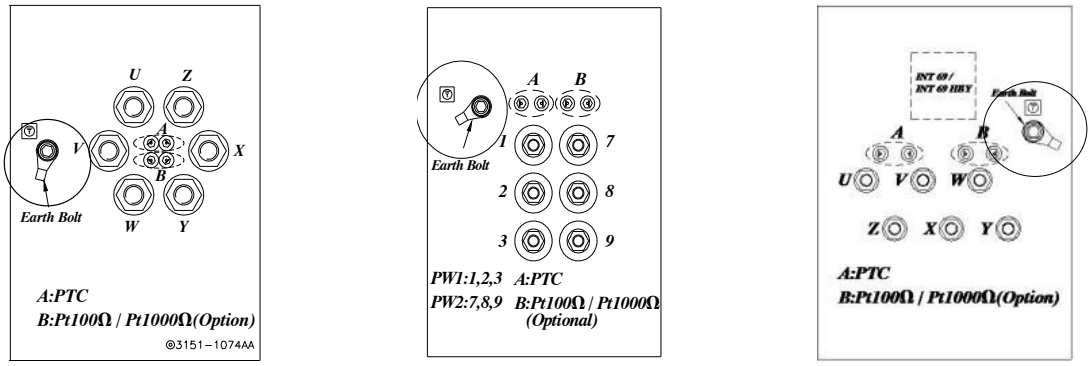

Figure 58 Grounding Terminal

Please make sure nothing is wrong before turning on the power. If there are any questions, please contact the supplier of equipments.

6. Operation and maintenance

6.1 Compressor start-up

PRE-START CHECKING- Table below shows the required procedures and checkpoints before starting-up the compressor during commissioning or initial operation of the unit.

Items	Things to be checked	States or standard values
1. Accessories	1. Oil level 2. Oil heater 3. System valves status 4. Solenoid valves 5. Capillary	1. Higher than the middle line of oil level sight glass 2. Should be kept energizing after compressor shut down. 3. Opened 4. Fixed 5. No serious distortion or damaged
2. Electrical system	1. Voltage of main power 2. Voltage of control circuit 3. Insulation resistance value of the motor between phase to phase and phase to ground. 4. Power terminals and wire cables' terminals connection. 5. Grounded 6. Capacity of electrical accessories 7. Settings of switches, sensors and controllers.	1. Electricity voltage should be kept within 5% to the rated voltage, instant maximum voltage drop while starting should be less than 10% to the rated voltage. 2. Standard voltage is 220V. Maximum voltage is 230V. If there is other demand, contact HANBELL. 3. Insulation resistance value should be above 5MΩ. 4. Power terminals are firmly fixed on terminal block and well insulated. Keep wire cables away from heat source and sharpened metal. Power terminals are fixed firmly and well insulated. Terminal screw and block are both required. 5. (Ruled by the local Electricity Regulations.) 6. Properly selected (or inquired by the system designer.) 7. Properly set (or inquired by the system designer.)
3. Piping system	1. Outer piping system 2. Leakage test 3. Bolts to fix the compressor.	1. Fixed firmly. 2. No leakage. 3. Fix the compressor tightly.
4. Safety devices	1. Motor coil sensor (thermistor) 2. Discharge sensor (thermistor) 3. Controller	1. Connected in series with discharge sensor to controller. 2. Connected in series with motor sensor to controller. 3. Closed circuit with N.C. & N.O.

In addition to the pre-start checking given in the above table, please also consider the following:

a. It is necessary to pay more attention to the auxiliary facilities while the chiller is commissioning at the job-site and the periodic maintenance after the initial start-up.

b. For a new chiller with compressor put in stock for a long time, it is recommended to add 1 to 1.5 liter of oil in the motor casing to provide better screw rotor lubrication during compressor's initial start-up.

c. In order to keep the capacity control smoothly under the low ambient temperature with the normal viscosity of oil, oil heater should be kept energizing after compressor has been shut down for preparation for the next start-up.

d. Check that all the settings on each pressure switch are correct.

e. Check if all the stop valves in the system are already open.

f. Check the rotating direction of the compressor by starting the compressor for a split second (approx. 0.5…1 sec.) and check the suction and discharge pressure gauges. The correct rotating direction is: suction pressure drops immediately and the discharge pressure will go up.

g. Compressor's lubrication oil should be checked immediately after starting. Oil level should be within sight glass range or higher than the middle line of oil level sight glass.

h. Oil foaming can be generated during starting phase, but it should reduce when the compressor is under stable operating conditions. Otherwise this can indicate excessive liquid in the suction gas.

i. The running condition of compressor after commissioning at the job-site should be adjusted as; the discharge temperature will be at least 20K above the saturated condensing temperature and the suction vapor superheat should be within 10K to the saturated evaporating temperature.

j. The whole plant, especially the pipelines and capillary tubes must be checked for abnormal vibrations. Please contact HANBELL or local distributor if any abnormal vibrations or noise found while compressor is running.

k. Regularly check the plant according to national regulations and the following items should also be checked:

- ●Operating data of the machine
- ●Check the lubrication/ oil level
- ●All compressor protection devices
- ●Check electrical cable connections and tightness

6.2 Troubleshooting

The table below shows some problem that might encounter in the jobsite during commissioning or upon operation of compressor. This table will only serve as a guide for the Engineer to understand the situation once the problem occurred in the site.

PROBLEMS	PROBABILITY CAUSES	REMEDY / CORRECTIVE ACTION
Sudden trip of motor thermistor / sensor	Low suction pressure cause low refrigerant flow rate	Install liquid injection to motor coil
	Refrigerant shortage	Charge refrigerant
	Suction filter clogged	Clean filter
	High suction temperature	Install liquid injection to motor coil
	High suction superheat	Adjust the superheat less than 10°K
	Unstable electricity system or failure	Check electricity power supply
	Motor overload	
	Bad motor coil causing temperature rising rapidly	
Compressor unable to load	Low ambient temperature or high oil viscosity.	Turn on the oil heater before compressor start.
	Capillary clogged.	Clean or replace capillary
	Modulation solenoid valve clogged or solenoid valve coil burnt.	Clean / purge solenoid valve core or replace the solenoid valve coil
	Internal built-in oil line clogged.	Check and clean the compressor oil circuit
	Piston stuck-up.	Change piston or piston ring
	Oil filter cartridge clogged.	Clean oil filter (replace if needed)
	Too small the high-low pressure differential.	Minimum pressure differential is 4 bar. Consider to install an oil pump.
Compressor unable to unload.	Modulation solenoid valve clogged or burnt.	Clean or replace the solenoid valve
	Piston rings worn off or broken, or cylinder damaged resulting leakage.	Change piston (if cylinder damaged severely, change the cylinder)
	Lubrication oil insufficient.	Check the oil level of the compressor if enough, add some oil if necessary
	Leakages at internal discharge cover plate end side.	Check or replace the gasket and tighten the bolts.
	Solenoid valve voltage misused.	Check the control voltage
	Piston stuck-up.	Change the piston set, and check the cylinder and slide valve.
	Capacity control logic unsuitable.	Check
Poor insulation of motor	1. Bad compressor motor coil.	Check the coil or change the motor stator
	2. Motor power terminal or bolt wet or frosty.	
	3. Motor power terminal or bolt bad or dusty.	
	4. Bad insulation of magnetic contactors.	
	5. Acidified internal refrigeration system.	
	6. Motor coil running long time continuously under high temperature.	
	7. Compressor restart counts too many times.	
Compressor starting failure or Y-Δ starter shifting failure	Slide valve piston unable to go back to its lowest % original position.	Check if the unloading SV is energized once the compressor shut down. Unload the compressor before shot down.
	Voltage incorrect.	Check the power supply
	Voltage drop too big when starting the compressor or magnetic contactor failure or phase failure.	Check the power supply and the contactor.
	Motor broken down	Change the motor
	Motor thermister sensor trip.	See “sudden trip of motor sensor” above
	Incorrect supply power connection.	Check and re-connect
	Y-Δ timer failure.	Check or replace.
	Discharge or suction stop valve closed.	Open the stop valve
	Improper connection between node terminals of Y-Δ wiring.	Check and re-connect the wiring
	Rotor locked	Check and repair
	Earth fault	Check and repair
	Protection device trip	Check
Abnormal vibration and noise of compressor	Damaged bearings.	Change bearing.
	Phenomenon of liquid compression.	Adjust proper suction superheat
	Friction between rotors or between rotor and compression chamber.	Change screw rotors or/and compression chamber.
	Insufficient lubrication oil.	Check the oil level of the compressor if enough, add some oil if necessary.
	Loosen internal parts.	Dismantle the compressor and change the damaged parts.
	Electromagnetic sound of the solenoid valve.	Check
	System harmonic vibration caused by improper piping system.	Check the system piping and if possible improve it using copper pipe.
	External debris fallen into the compressor.	Dismantle the compressor and check the extent of the damage.
	Friction between slide valve and rotors.	Dismantle the compressor and change the damaged parts.
	Motor rotor rotates imbalance.	Check and repair.
Compressor does not run	Motor line open	Check
	Tripped overload	Check the electrical connection
	Screw rotors seized	Replace screw rotors, bearings etc.…
	Motor broken	Change motor.
High discharge temperature	Insufficient refrigerant.	Check for leaks. Charge additional refrigerant and adjust suction superheat less than 10°K
	Condenser problem of bad heat exchange.	Check and clean condenser
	Refrigerant overcharge.	Reduce the refrigerant charge
	Air / moisture in the refrigerant system	Recover and purify refrigerant and vacuum system
	Improper expansion valve.	Check and adjust proper suction super heat
	Insufficient lubrication oil.	Check the oil level and add oil.
	Damaged bearings.	Stop the compressor and change the bearings and other damaged parts.
	Improper Vi value.	Change the slide valve.
	No system additional cooling (Liquid injection or oil cooler)	Install additional system cooling (liquid injection or oil cooling or both base on working condition limitation)
Compressor losses oil	Lack of refrigerant	Check for leaks. Charge additional refrigerant.
	Improper system piping	Check and correct the piping or install an external oil separator
	Liquid fills back	Maintain suitable suction superheat at compressor
Low suction pressure	Lack of refrigerant	Check for leaks. Charge additional refrigerant.
	Evaporator dirty or iced	Defrost or clean coil
	Clogged liquid line filter drier	Replace the cartridge
	Clogged suction line or compressor suction strainer	Clean or change suction strainer
	Expansion valve malfunctioning	Check and reset for proper superheat
	Condensing temperature too low	Check means for regulating condensing temperature

Note: The replacement of compressor internal parts should be perform only by a qualified / certified service technician with full knowledge of HANBELL screw compressor or it should be a Service Engineer from HANBELL.

7.1 Additional cooling

When compressors operate in the following application conditions, installation of an additional auxiliary cooling apparatus is recommended to lower discharge temperature, maintain proper temperature of lubricant and additional cooling for motor coil… to ensure safe running of compressors with efficiency.

- Air-cooled system
- High compression ratio system such as heat pump, low temperature and refrigeration system
- High discharge temperature system such as heat recovery system
- If compressors have to run at partial load below 50% continuously in a long term.
- Any other heavy duty application

There are two type of additional cooling of compressor that described separately as below.

a. Liquid injection applications

In areas with high condensing temperature and/or low evaporating temperature as in the limitation diagram, additional cooling is required in order for the compressor to work properly. A relatively simple method of additional cooling is direct refrigerant injection in the compressor either in the motor side or compression chamber side.

The purpose of installing a liquid injection system is to prevent the compressor from overheat. The system installed a liquid injection expansion valve between the liquid line and compressor for cooling down the compression chamber and motor to ensure the continuous and safe running of the compressor. The suction superheat should be controlled between 5K~10K for the application of air-cooled and heat pump chillers by means of expansion valve devices. These devices can be adjusted by the stem of the expansion valve to control the suction superheat by means of refrigerant flow rate. When the initial startup, the loading of the chiller is heavy due to the high temperature of chilled water, so the liquid injection devices capacity should be selected or calculated enough to reduce the overheat of the compressor.

Calculating the cooling capacity of liquid injection devices

Liquid injection devices can be calculated with the **HANBELL selection software** or manually. For manual calculation, consider the most extreme conditions to be expected during actual operations i.e. minimum evaporating temperature, maximum suction gas super heat and condensing temperature.

Liquid injection applied with low temperature expansion valve

When the compressor applied in the low temperature system (E.T. ≦ -10°C) the compression ratio is high at this condition, also the discharge temperature will be very high. The design of the liquid injection system for low temperature application is similar to the illustration shown in figure below. There are two connectors for the liquid injection in the compressor, one is in the motor side to cool down the motor temperature and reduce the discharge temperature. The other is in the compression chamber side and its function is to reduce the discharge temperature and increase the compression efficiency. However, when additional cooling in compression chamber like economizer operation, oil cooler application is used or when condensing temperature is low, discharge temperature will be kept low and liquid injection may not be turned on, although motor load is severe and motor coil temperature is high. This may lead to motor failure. Therefore, in application mentioned above Pt100 or Pt1000 for liquid injection to motor is recommended instead.

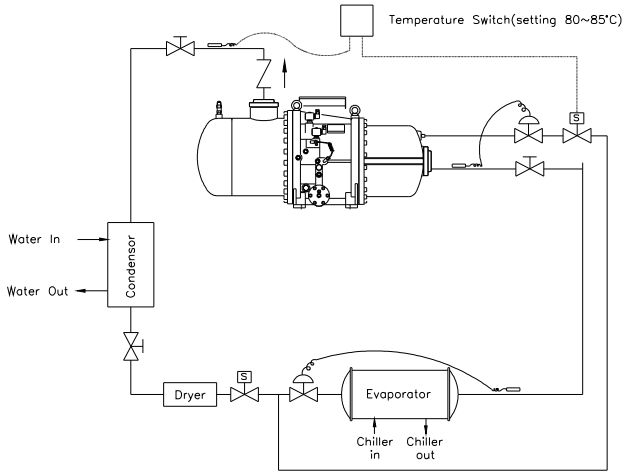

Figure 59 Liquid injection connected to motor

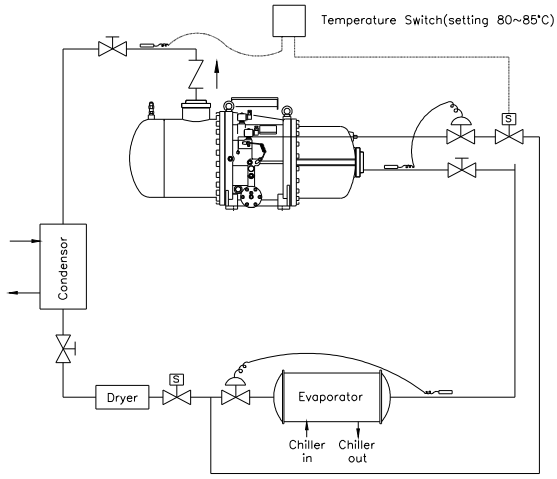

Figure 60 Liquid injection connected to compression chamber

Liquid injection applied with high temperature expansion valve

Select the high temperature expansion valve, which can sense the discharge temperature with its remote bulb. This can control the opening of expansion valve proportionally, and can reach the best cooling effect; it will control the compressor discharge temperature at an optimal situation of around 80°C.
It can also be installed with an additional solenoid valve or service valve in front of the high temperature expansion valve for the maintenance purposes. The solenoid valve will be opened while starting the compressor. The equilibrium tube of high temperature expansion valve should be connected to the high-pressure side to counter the internal pressure.
However, when additional cooling in compression chamber like economizer operation, oil cooler application is used, or when condensing temperature is low, discharge temperature may be kept low and liquid injection may not be turned on, although motor load is severe and motor coil temperature is high. This may lead to motor failure. Therefore, in applications mentioned above, Pt100 or Pt1000 for liquid injection to motor is recommended instead.

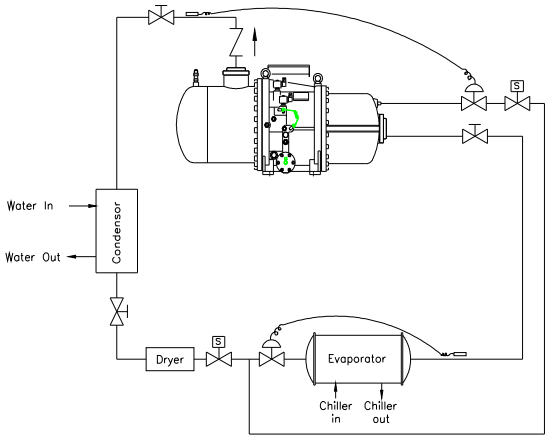

Figure 61 Liquid injection (high temperature type) connected to motor

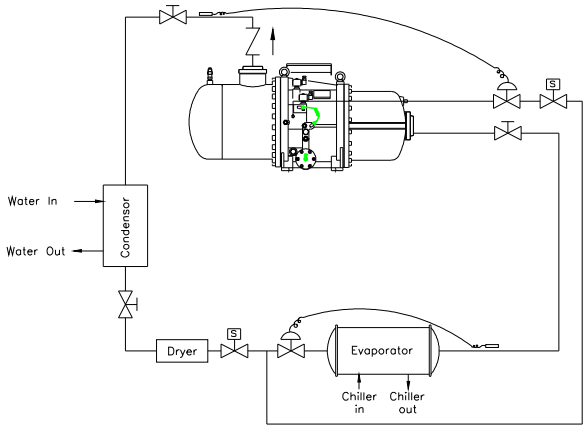

Figure 62 Liquid injection (high temperature type) to compression chamber

b. Oil cooler applications

Compared to liquid injection applications, external oil cooler applications reduces the discharge temperature and at the same time gives better efficiency. Oil cooler application can be classified into 3 types: cooling by refrigerant, cooling by ambient air, cooling by cooling water. Oil cooler capacity can be calculated manually or using HANBELL selection software. When calculating manually, worst case operating conditions must be considered: minimum evaporating temperature, maximum suction gas superheat, maximum condensing temperature and the operation mode.

Cooling by refrigerant

The cooler uses refrigerant as the cooling medium. A basic refrigerant-cooled oil cooling system is shown in Figure 63.

In the oil cooler, solenoid valve for refrigerant circuit is controlled by oil temperature of the oil outlet of compressor.

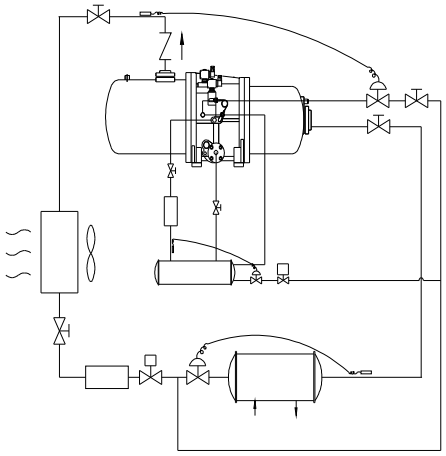

Figure 63 Oil cooling by refrigerant

Air-cooled oil cooling (cooling by ambient air)

The basic air-cooled oil cooling system is shown in Figure 64. This method of cooling is indirect cooling which uses ambient air to cool down the oil, which circulates in the oil cooler.

In the oil cooler, fan is controlled by oil temperature of the oil outlet of compressor.

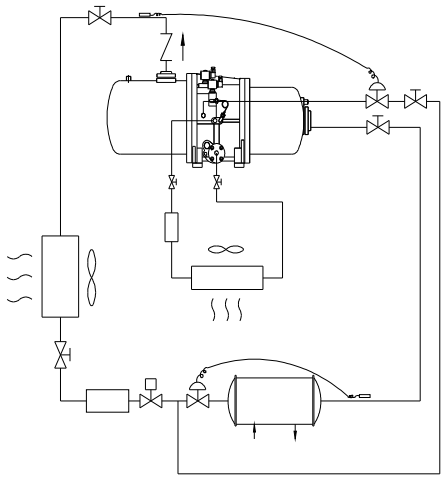

Fig. 64 Oil cooling by ambient air

Water-cooled oil cooling (cooling by water)

This cooling method utilizes a shell and tube heat exchanger and a source of cooled liquid from an external cooling tower or closed loop evaporative cooler. Once-through water can be used but results in high water usage. An indirect cooling system uses a pump to circulate the cooling medium and a cooling tower or evaporative cooler to reject heat from the cooling medium. The basic water-cooled oil cooling system is shown in Figure 65.

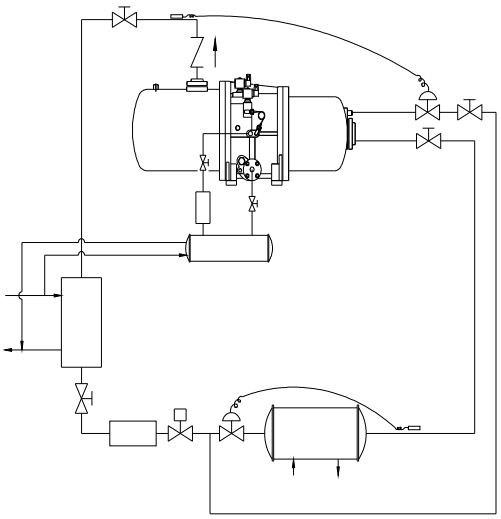

Figure 65 Oil cooling by water

Note:
1. Please decide appropriate oil cooler capacity by referring to HANBELL selection software.
2. The max. pressure drop allowed in external oil cooler is 1.5 kg/cm^2.
3. When applying an oil cooler with a compressor, please add appropriate refrigeration oil in accordance with the size of oil cooler as well as the length of piping.
4. For RC2-100/140/180, their oil circuit design is different from others. These models don't use the oil stop pin for external oil cooler application. If you find the oil connector (inlet/outlet) installed on the compressor, this means the oil needs to flow out from the oil outlet connector and flow in to the oil inlet connector. If you don't use external additional cooling, you should simply see a cover plate on this position which means the oil will pass this internal tunnel and way up to the cylinder and bearings. Please refer to the illustration below.

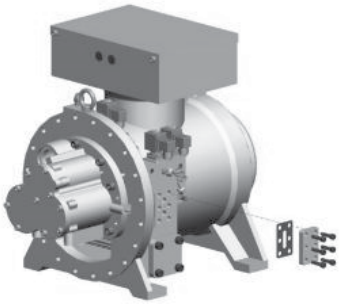

Figure 66 Internal oil circuit application

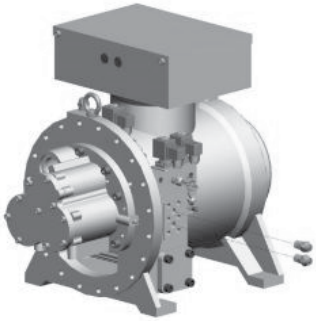

Figure 67 External oil circuit application

7.2 Economizer applications

HANBELL screw compressor can be fitted with an additional middle connection for economizer operation. With this form of operation, refrigeration capacity and also system efficiency can be improved by means of a sub-cooling circuit or two-stage refrigerant expansion.
Based on HANBELL extensive research a special design of the economizer connection has been developed so that the connection causes no additional back flow losses during compression. As a result of this, compressor capacity is fully retained in all operating conditions.
Please refer to Hanbell selection software for calculation of economizer capacity at different operating conditions.

Principle of operation

As opposed to the reciprocating operation of a piston compressor, the compression in a screw compressor takes place only with one flow direction. When the rotors turn, refrigerant vapor is pressed into the rotor grooves by the opposing rotor teeth and transported to end wall of the corresponding working space. In this phase, the volume is steadily reduced and the vapor is compressed from suction pressure to condensing pressure.
The pressure at the additional middle connection is at a similar level to the intermediate pressure with a two-stage system. As a result of these features, a screw compressor of this design can be combined with an additional sub-cooling circuit or an intermediate pressure vessel (flash type sub-cooler) for two-stage expansion. These measures result in a clearly increased refrigeration capacity due to additional liquid sub-cooling, especially with high-pressure ratios. The power consumption of the compressor increases slightly compare to the additional work that takes place at a better level of efficiency.

System with Economizer (sub-cooler)

With this form of operation, a heat exchanger (refrigerant sub-cooler) is used to sub-cooled liquid refrigerant. The sub-cooling is achieved by injecting a part of the refrigerant from the condenser through an expansion device in counter flow into the sub-cooler, which then evaporates due to the absorption of heat. The superheated vapor is pulled into the compressor at the Economizer connection and mixed with the vapor, which is already slightly compressed from the evaporator.
The sub-cooled liquid is at condensing pressure with this form of operation, the pipeline to the evaporator does not therefore require any special features, aside from insulation. The system can be generally applied. Figure 67 shows the system with economizer, **sub-cooler**.

System with economizer (flash type)

The liquid sub-cooling is achieved with this form of operation by reducing the boiling point pressure in an intermediate pressure vessel **(flash type sub-cooler)** arranged between condenser and evaporator. This physical effect leads to the cooling of the liquid down to the boiling point, due to evaporation of part of the liquid. To stabilize the pressure of the vessel, a regulator is used which at the same time controls the quantity of vapor flowing to economizer connection of the compressor.
This form of operation gives the most economical thermodynamic performance due to direct heat exchanging. As the intermediate pressure is reduced to the boiling point temperature this system should only be used with flooded evaporators. Figure 68 shows the system with economizer, **flash type sub-cooler.**

Note:
1. When economizer is used, it is recommended to install a muffler before middle-pressure returned gas port in compression chamber to effectively mitigate pulsation noise in middle pressure as shown in the drawing below.

2. A filter and check valve are also recommended to install before ECO port of compressor.

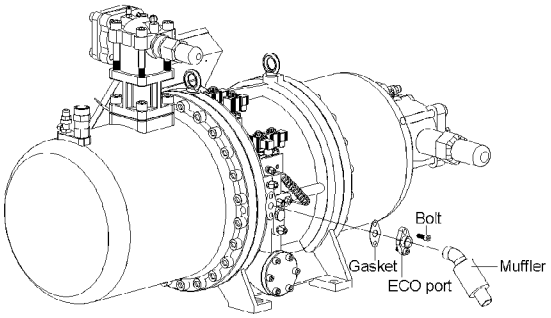

Figure 68 Installation of ECO buffer

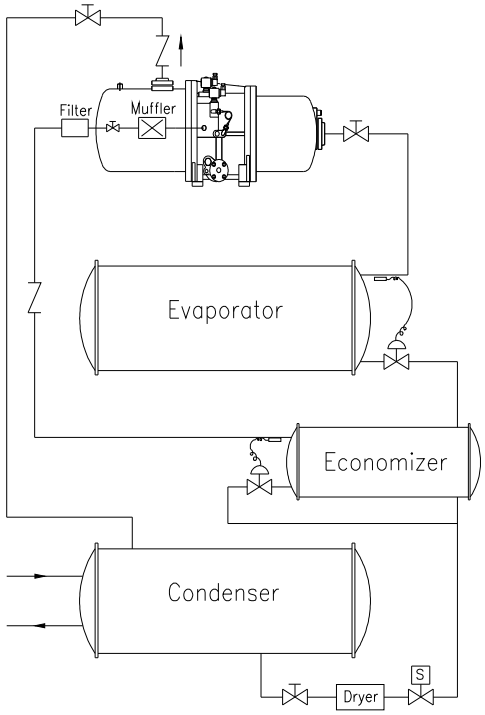

Figure 69 System with economizer (sub-cooler)

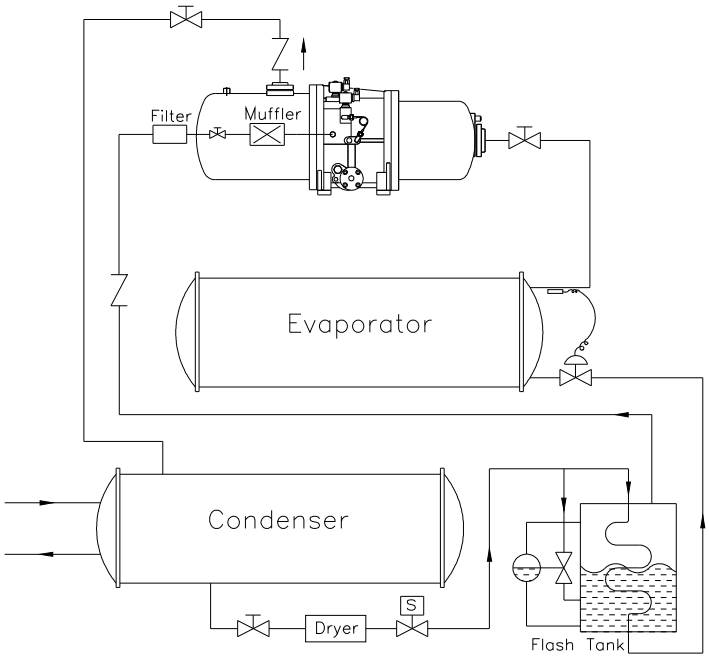

Figure 70 System with economizer (flash type sub-cooler)

7.3 Parallel system applications

In the rack or parallel system, it is possible to happen the unequal-distribution of returned oil from the evaporator that could cause low oil level in one or more of the compressors. Be sure to install the oil level switch inside each compressors and oil flow switch installed in each oil return line to ensure the returned oil in each compressor with normal oil level.

The basic design of the system is shown in Figure 69, twin compressor parallel system connections. The accessories installed are the basic and if there are more applications or protection required, contact HANBELL or local distributor/agent for more information or further confirmation.

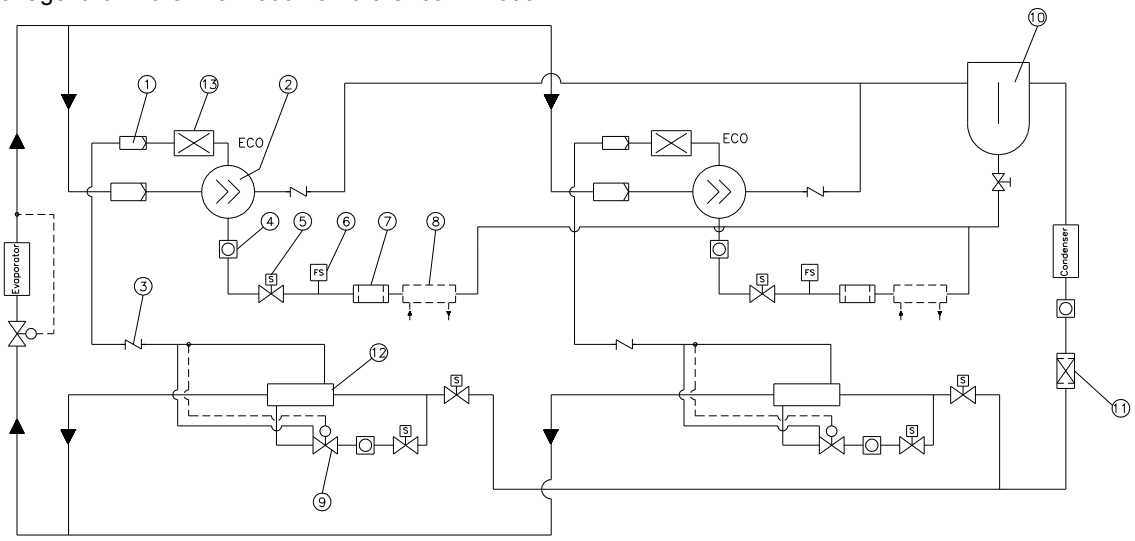

Figure 71 Parallel system with two compressors

Item	Description	Item	Description	Item	Description
1	Filter	6	Flow switch	11	Dryer
2	Compressor	7	Oil filter	12	Secondary cooler
3	Check valve	8	Oil cooler	13	Muffler
4	Sight glass	9	Expansion valve		
5	Solenoid valve	10	Oil separator		

7.4 Oil pump application

An additional oil pump is recommended to install to the system when the differential pressure of oil pressure and suction pressure is less than 4bar (for example: water cooled flooder chiller). If compressor is operating at the mentioned condition, the failure of modulation and lubrication will be happened and will seriously damage the compressor. Besides the installation of additional oil pump, a high – low pressure differential switch is also recommended to install to this kind of system. Please contact with Hanbell for more detailed information of oil pump.

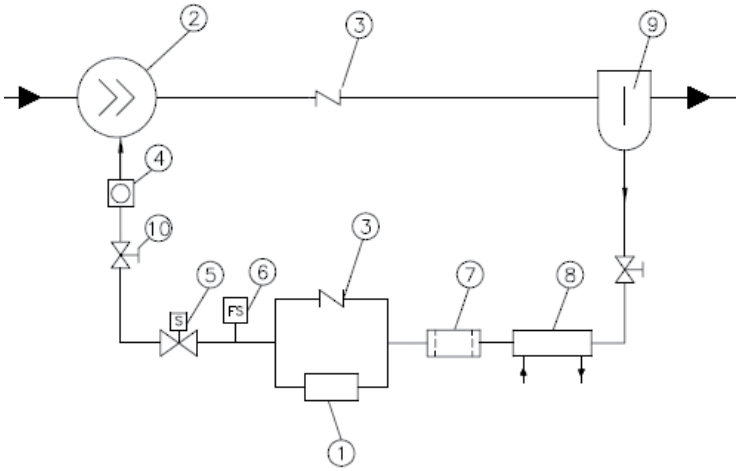

Figure 72 Additional oil pump

Item	Description	Item	Description	Item	Description
1	Oil pump	5	Solenoid valve	9	External oil separator
2	Compressor	6	Flow switch	10	Service valve
3	Check valve	7	Oil filter cartridge		
4	Sight glass	8	Oil cooler		

7.5 Important note of applications of compressor

1. Pump down

Do not pump down the compressor on the chiller as a routine operation except only for temporary maintenance or a long term shut down. Because pump down will cause extremely high temperature in the compression chamber and overheat of the motor as well due to less amount of refrigerant in the suction side. When doing the pump down, be sure to take notice of the items listed below :

a. Pump down should be done once each time, as it may be dangerous to the compressor, compression chamber for pumping down repeatedly.
b. The minimum suction pressure when doing the pump down should be over 15 psig for R-134a and 25 psig for R22.
c. Take notice of compressor running noise. If there is any abnormal noise happened, then emergently stop the pump down.

2. Long term partial load operation

If compressors have to run at partial load below 50% continuously, though maybe within operation limits under such operation condition and with temperature of motor below trip setting for overheating, insufficient dissipation of heat in motor will occur due to lower flow rate of suction gas at partial load. If compressors operate under high temperature for a long time, insulation of motor will deteriorate gradually at risk of serious motor damage finally. In such severe operation conditions, Hanbell strongly recommends installation of liquid injection system to cool motor coil and use of Pt100 or Pt1000 sensor as described in chapter 4.4-s, to effectively control temperature of motor while running. It is suggested to switch on liquid injection when temperature of motor coil is higher than 60℃ and turn off liquid injection when it's lower than 50℃.

3. Low pressure receiver

When a compressor operates in the following application conditions, installation of a low pressure receiver is recommended in order to prevent massive liquid refrigerant from returning to the compressor under momentary changes of operation condition.

●Heat pump ●Parallel system ●system with long piping
●operating in the low ambient temperature area ●system heating load varies extremely

8 Selection software

Selection software installation procedure

Step:

1. This compressor model selection software is suitable for the operating system of Windows98, NT or the above edition (Windows ME, 2000, XP, 7, 8, 8.1, 10) Systematic demand: The magnetic disc space should be at least 300MB.
2. Best resolution of browser please use the whole screen 800x600 degree.
3. Before installing this software, please close all the works and browser windows firstly.
4. To the selection software files, please move the cursor to **"setup.exe"** and double click.

5. And then it will present 「**welcome**」window, please select **"next"** Then, 「**users information**」windows appear, please select **"next"** again and then the windows appear 「**choose the purpose position**」 Finally please choose the file position, click the **"next"** button. (Default recommends)

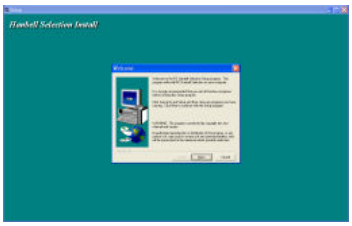

6. The software will decompress automatically.

ESP Operating Procedure:

Step:

1. Before operating our selection software, please check any upgrade of selection software at Hanbell website

2. Enter the main window and it will present products of 「**RC2-A**」, 「**RC2-B**」, 「**RC2-AF**」, 「**RC2-BF**」, 「**RE-A**」, 「**RE-B**」, 「**LB**」, 「**RC2-AV**」, 「**RC2-AVI**」, 「**RG**」, 「**RT**」 button of six series of Hanbell compressors.

3. After selecting 「**RC2-A**」, will present several function buttons:
   (3.1) choose the unit, 「**SI**」or 「**Imperial**」. **(default unit is SI)**
   (3.2) 「**PERFORMANCE**」button shows the performance sheet of the compressor

The above window is the operating mode of a compressor, just key-in the following condition and then click the 「**Calculate**」button.

- Refrigerant type
- With economizer (yes/no)
- Compressor model
- Oil cooler or liquid injection
- Power supply (default is 380V 3 50Hz)
- Partial load percent (%)
- Evaporating SST (˚C,˚F)(default is 0 ˚C)
- Condensing SCT (˚C,˚F)(default is 40 ˚C)

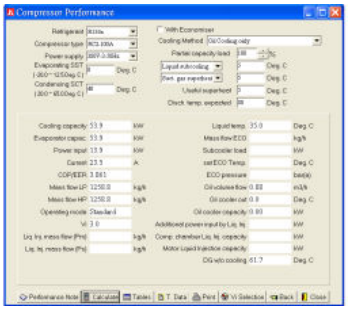

Showed the calculated performance data in the middle of the window.

In the lower part of the window, there are several kinds of buttons:

「**Calculate**」: Must click this key, to calculate the value.

「**Tables**」：Can calculate the coefficient of performance by means of polynomial.

「**T.Data**」：The technical data is the same with function key of technical data

「**Print**」： Copying the calculated performance data

「**Vi selection**」：After calculating, different Vi value can be chose by clicking this button.

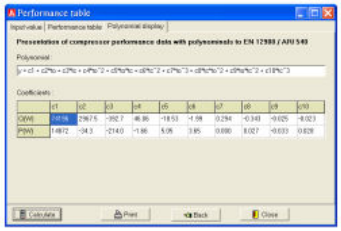

(3.2.1) Click 「**Tables**」button and the window will appear right one (default window), it can calculate the coefficient of performance using polynomial.

(3.2.2) Click the polynomial display button and then 「**Calculate**」. Presentation of compressor performance data using polynomial calculation.

(3.3) 「***SELECTION***」by clicking this button, it will help the customer how to choose screw compressor model.
After clicking the 「***SELECTION***」button, the right window is customer's necessary operating mode. Just key-in the following data.
- Refrigerant type
- Evaporating SST
- Cooling Capacity (KW)
- Condensing SCT
- Power supply

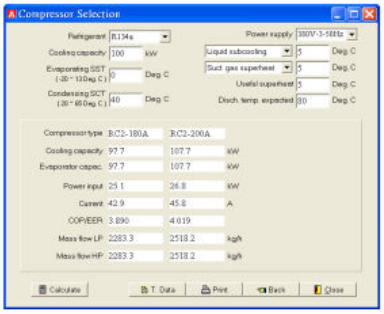

The data shown in the middle of the window is the compressor model and its performance

「**Calculate**」: Must click this button, to calculate the value. After keying the required data click this button and will show the compressor model and the performance.

「**T.Data**」: The technical data is the same with function key of technical data(3.4)

「**Print**」: Copying the calculated performance data

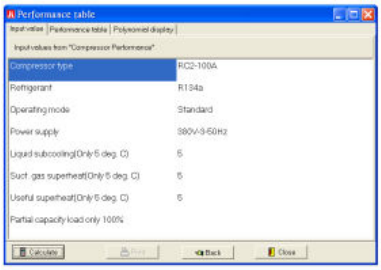

(3.4) 「***T.DATA***」button is for the detailed technical information that the customer needs to know about the compressor.

(3.5) 「**EXTRA**」**Refrigerant** Contrast sheet (Pressure – Temperature) and unit conversion.
Entering the window, it will present the following information:
「**Refrigerant Characteristic**」 (R22, R134a, R407C, R404A)
「**Conversion Tables**」:
Temperature, length, area, volume, Mass
Pressure, Specific Volume, density, Velocity
Flow rate, power, Specific Enthalpy, Specific Entropy (specific heat)

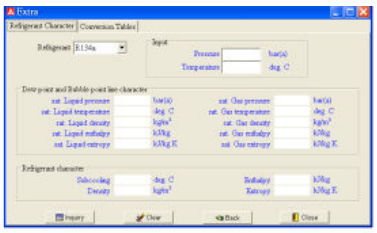

(3.6) 「**ABOUT**」Shows the edition of this software and technical support.
(3.7) 「**EXIT**」Leave current window

Appendix. RC2 Compressor noise level

RC2 Series Screw Compressors' Sound Pressure Level

Hz\Model	RC2-100	RC2-140	RC2-180	RC2-200	RC2-230	RC2-260	RC2-300	RC2-310
50	55.0	55.6	56.5	59.7	60.1	60.4	60.8	61.0
63	51.9	52.4	53.3	56.3	56.7	57.0	57.3	57.6
80	56.9	57.4	58.4	61.7	62.1	62.4	62.8	63.1
100	54.0	54.5	55.5	58.6	59.0	59.3	59.6	59.9
125	53.6	54.1	55.0	58.1	58.5	58.8	59.2	59.4
160	53.1	53.6	54.5	57.6	58.0	58.3	58.6	58.8
200	51.0	51.5	52.4	55.4	55.8	56.0	56.3	56.6
250	60.4	61.0	62.1	65.6	66.1	66.3	66.7	67.0
315	56.1	56.6	57.6	60.9	61.3	61.6	61.9	62.2
400	53.2	53.7	54.7	57.8	58.2	58.4	58.8	59.0
500	57.6	58.2	59.2	62.5	62.9	63.3	63.6	63.9
630	55.5	56.0	57.0	60.2	60.6	60.9	61.3	61.6
800	64.8	65.4	66.6	70.3	70.8	71.1	71.5	71.9
1000	59.8	60.4	61.5	64.9	65.4	65.7	66.1	66.3
1250	66.9	67.5	68.7	72.6	73.1	73.4	73.9	74.2
1600	63.2	63.7	64.9	68.5	69.0	69.3	69.7	70.0
2000	62.0	62.6	63.7	67.3	67.8	68.1	68.5	68.8
2500	62.0	62.6	63.7	67.3	67.8	68.1	68.5	68.8
3150	59.5	60.1	61.1	64.6	65.1	65.3	65.7	66.0
4000	58.2	58.8	59.8	63.2	63.6	63.9	64.3	64.6
5000	53.1	53.6	54.6	57.7	58.1	58.3	58.7	58.9
6300	50.2	50.7	51.6	54.5	54.9	55.2	55.5	55.7
8000	45.2	45.6	46.4	49.0	49.3	49.6	49.9	50.1
10000	44.6	45.0	45.8	48.4	48.7	49.0	49.3	49.5
12500	39.4	39.8	40.5	42.8	43.1	43.2	43.5	43.7
16000	34.8	35.2	35.8	37.8	38.0	38.2	38.5	38.6
20000	34.5	34.8	35.4	37.4	37.6	37.8	38.1	38.2
Overall dB(A)	73.1	73.7	74.8	78.4	78.8	79.2	79.6	79.9

Hz\Model	RC2-320	RC2-340	RC2-370	RC2-410	RC2-430	RC2-470	RC2-510	RC2-550	RC2-580
50	61.2	61.4	62.4	63.8	64.1	64.8	65.7	66.7	66.9
63	57.7	58.0	58.9	60.2	60.5	61.1	62.0	62.9	63.1
80	63.3	63.5	64.5	66.0	66.3	67.0	67.9	68.9	69.2
100	60.0	60.3	61.2	62.6	62.9	63.6	64.4	65.4	65.7
125	59.6	59.8	60.8	62.2	62.4	63.1	64.0	64.9	65.2
160	59.0	59.3	60.2	61.6	61.8	62.5	63.3	64.3	64.5
200	56.7	57.0	57.9	59.2	59.4	60.1	60.9	61.8	62.0
250	67.2	67.5	68.5	70.1	70.4	71.2	72.1	73.2	73.5
315	62.4	62.6	63.6	65.1	65.3	66.1	67.0	67.9	68.2
400	59.2	59.4	60.4	61.8	62.0	62.7	63.5	64.5	64.7
500	64.1	64.4	65.4	66.9	67.2	67.9	68.8	69.8	70.1
630	61.7	62.0	63.0	64.4	64.7	65.4	66.3	67.3	67.5
800	72.0	72.4	73.5	75.2	75.5	76.3	77.3	78.5	78.8
1000	66.5	66.8	67.9	69.4	69.7	70.5	71.4	72.5	72.7
1250	74.4	74.7	75.9	77.6	77.9	78.8	79.9	81.0	81.3
1600	70.2	70.5	71.6	73.3	73.6	74.4	75.4	76.5	76.8
2000	69.0	69.3	70.4	72.0	72.3	73.1	74.1	75.1	75.4
2500	69.0	69.3	70.4	72.0	72.3	73.1	74.1	75.1	75.4
3150	66.2	66.4	67.5	69.0	69.3	70.1	71.0	72.1	72.4
4000	64.7	65.0	66.0	67.5	67.8	68.6	69.5	70.5	70.8
5000	59.1	59.4	60.3	61.7	61.9	62.6	63.4	64.4	64.6
6300	55.9	56.1	57.0	58.3	58.5	59.2	60.0	60.9	61.1
8000	50.2	50.4	51.2	52.4	52.6	53.2	53.9	54.7	54.9
10000	49.6	49.8	50.6	51.7	52.0	52.5	53.2	54.0	54.2
12500	43.8	44.0	44.7	45.7	45.9	46.4	47.0	47.7	47.9
16000	38.7	38.9	39.5	40.4	40.6	41.0	41.6	42.2	42.3
20000	38.3	38.5	39.1	40.0	40.2	40.6	41.1	41.7	41.9
Overall dB(A dB(A)	80.1	80.4	81.5	83.1	83.4	84.2	85.2	86.3	86.6

Hz\Model	RC2-620	RC2-710	RC2-790	RC2-830	RC2-930	RC2-1020	RC2-1130	RC2-1270	RC2-1530
50	67.2	67.4	67.5	67.8	68.5	70.0	70.3	70.6	70.9
63	63.4	63.5	63.7	63.9	64.6	66.0	66.3	66.6	66.9
80	69.4	69.6	69.8	70.1	70.8	72.3	72.7	73.0	73.3
100	65.9	66.1	66.3	66.5	67.2	68.7	69.0	69.3	69.6
125	65.4	65.6	65.8	66.0	66.7	68.1	68.5	68.7	69.1
160	64.8	65.0	65.1	65.4	66.0	67.5	67.8	68.1	68.4
200	62.3	62.4	62.6	62.8	63.5	64.9	65.2	65.4	65.8
250	73.8	74.0	74.1	74.4	75.2	76.8	77.2	77.5	77.9
315	68.5	68.7	68.8	69.1	69.8	71.3	71.7	72.0	72.3
400	65.0	65.2	65.3	65.6	66.2	67.7	68.0	68.3	68.6
500	70.4	70.6	70.7	71.0	71.7	73.3	73.7	73.9	74.3
630	67.8	68.0	68.1	68.4	69.1	70.6	70.9	71.2	71.6
800	79.1	79.3	79.5	79.8	80.6	82.4	82.8	83.1	83.5
1000	73.0	73.2	73.4	73.7	74.4	76.1	76.5	76.7	77.1
1250	81.7	81.9	82.1	82.4	83.2	85.1	85.5	85.8	86.2
1600	77.1	77.3	77.5	77.8	78.6	80.3	80.7	81.0	81.4
2000	75.7	75.9	76.1	76.4	77.2	78.9	79.3	79.6	80.0
2500	75.7	75.9	76.1	76.4	77.2	78.9	79.3	79.6	80.0
3150	72.6	72.8	73.0	73.3	74.0	75.7	76.1	76.3	76.7
4000	71.1	71.3	71.4	71.7	72.4	74.0	74.4	74.7	75.0
5000	64.9	65.1	65.2	65.5	66.1	67.6	67.9	68.2	68.5
6300	61.3	61.5	61.7	61.9	62.5	63.9	64.2	64.4	64.8
8000	55.1	55.3	55.4	55.6	56.2	57.4	57.7	57.9	58.2
10000	54.5	54.6	54.7	55.0	55.5	56.7	57.0	57.2	57.5
12500	48.1	48.2	48.3	48.5	49.0	50.1	50.3	50.5	50.8
16000	42.5	42.6	42.7	42.9	43.3	44.3	44.5	44.7	44.9
20000	42.1	42.2	42.3	42.5	42.9	43.8	44.1	44.2	44.4
Overall dB(A)	86.9	87.1	87.3	87.6	88.4	90.1	90.5	90.8	91.2

Note:

1. The above 1/3 octave spectrum datum is based on C/T 50°C,E/T 0°C, with R22.
2. For all compatible refrigerants of R22, R134a, R407C and the working conditions acceptable in limitation of Hanbell screw compressors, it has very similar value at all respective bars as above Sound Pressure Level chart with ±2dBA tolerance of OVERALL value at any working condition by any refrigerant.
3. The above datum is based on ISO-2151 to be measured.

HANDLING POE OILS

Please read as improper handling can cause compressor failure and void the compressor warranty.

POE oils are more hygroscopic than mineral oils, so exposing POE oils to air will result in their absorbing moisture quicker than mineral oils. When POE oils are exposed to moisture and heat, they may react, forming acid that is harmful to the system. If a POE system is open for the same amount of time service technicians are used to having mineral oil systems open, there is a much greater chance of moisture contamination of the oil and, consequently, downstream system concerns.

As a result, it is imperative that contractors keep containers of POE oils sealed, except when the oils are actually being dispensed. POE oils should also be stored properly in their original container because many plastics used to package oils are permeable to moisture. It is also important to keep compressors and systems closed, except when work is actually being done on the equipment, and to filter out undesirable contaminants. This can be achieved with proper installation and service techniques as well as the use of correct filters and driers.

Once moisture is in the oil it is extremely difficult to remove, even under a high vacuum it can take many hours to reduce the level of moisture. Several filter drier changes should be planned when replacing a compressor. Often an oil change and filter driers are required to correct the problem.

Oil should be sampled once a year and sent to an oil testing lab.

High moisture and acid levels will cause coppering in the slide chamber and will cause premature slide failure. I extreme cases copper will be deposited on the compressor screws and cause high noise levels and compressor failure. High acid levels will also cause compressor motor failure.

Any questions or concerns please contact MCS Controls.

239-694-0089

MCSCONTROLS.COM

HANBELL

MICRO CONTROL SYSTEMS

Providing HVAC/R Control Solutions Worldwide

5580 Enterprise Pkwy. Fort Myers, FL 33905
Office: (239) 694-0089
Fax: (239) 694-0031
www.mcscontrols.com